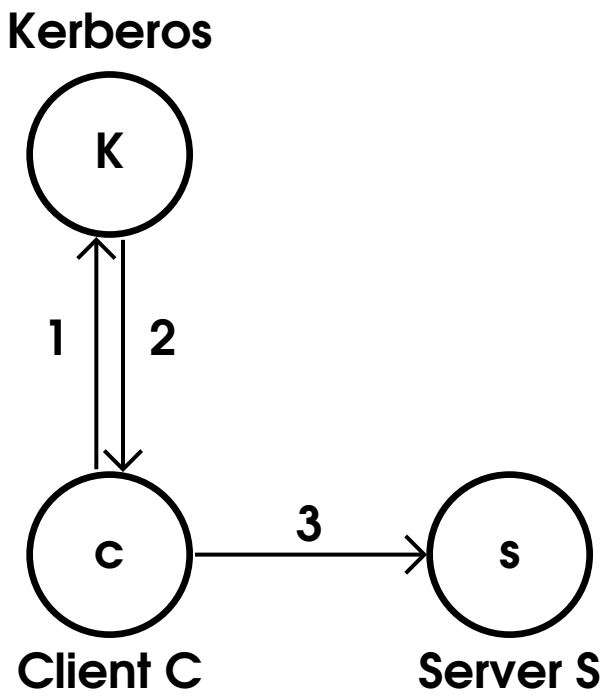
Kerberos
K
1
2
C
3
S
Client C
Server S