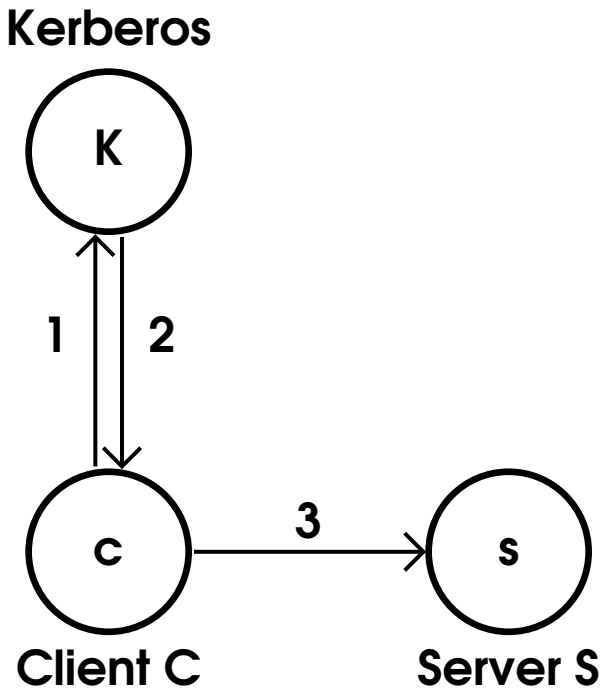
Kerberos
K
1
2
c
3
s
Client C
Server S