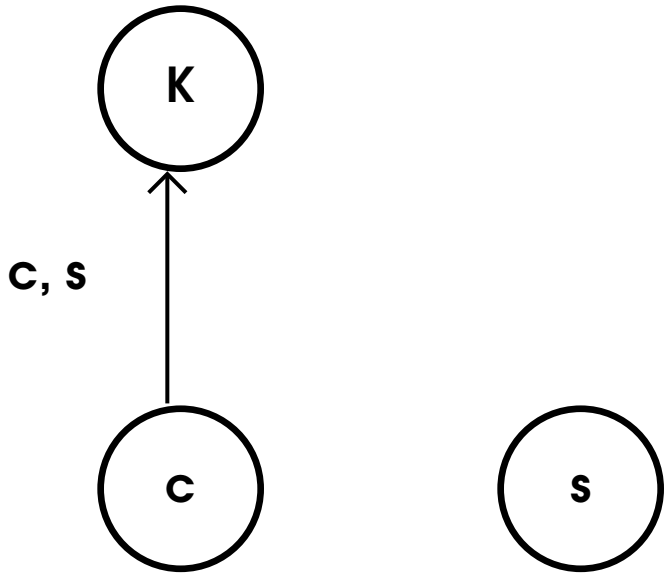
K
C, S
C
S