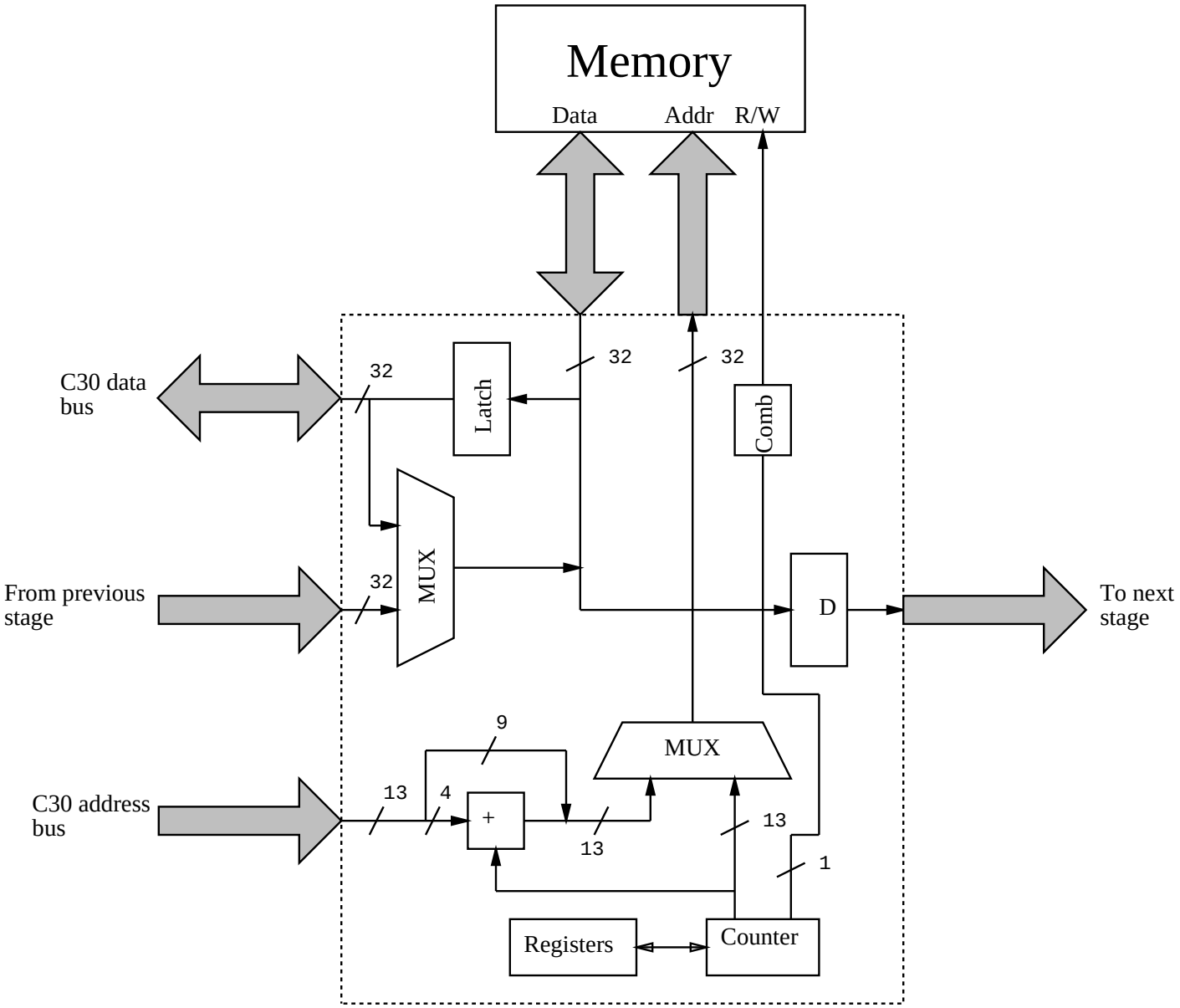
Memory
Data
Addr
R/W
C30 data bus
32
Latch
32
32
Comb
MUX
From previous stage
32
D
To next stage
9
MUX
C30 address bus
13
4
+
13
13
1
Registers
Counter