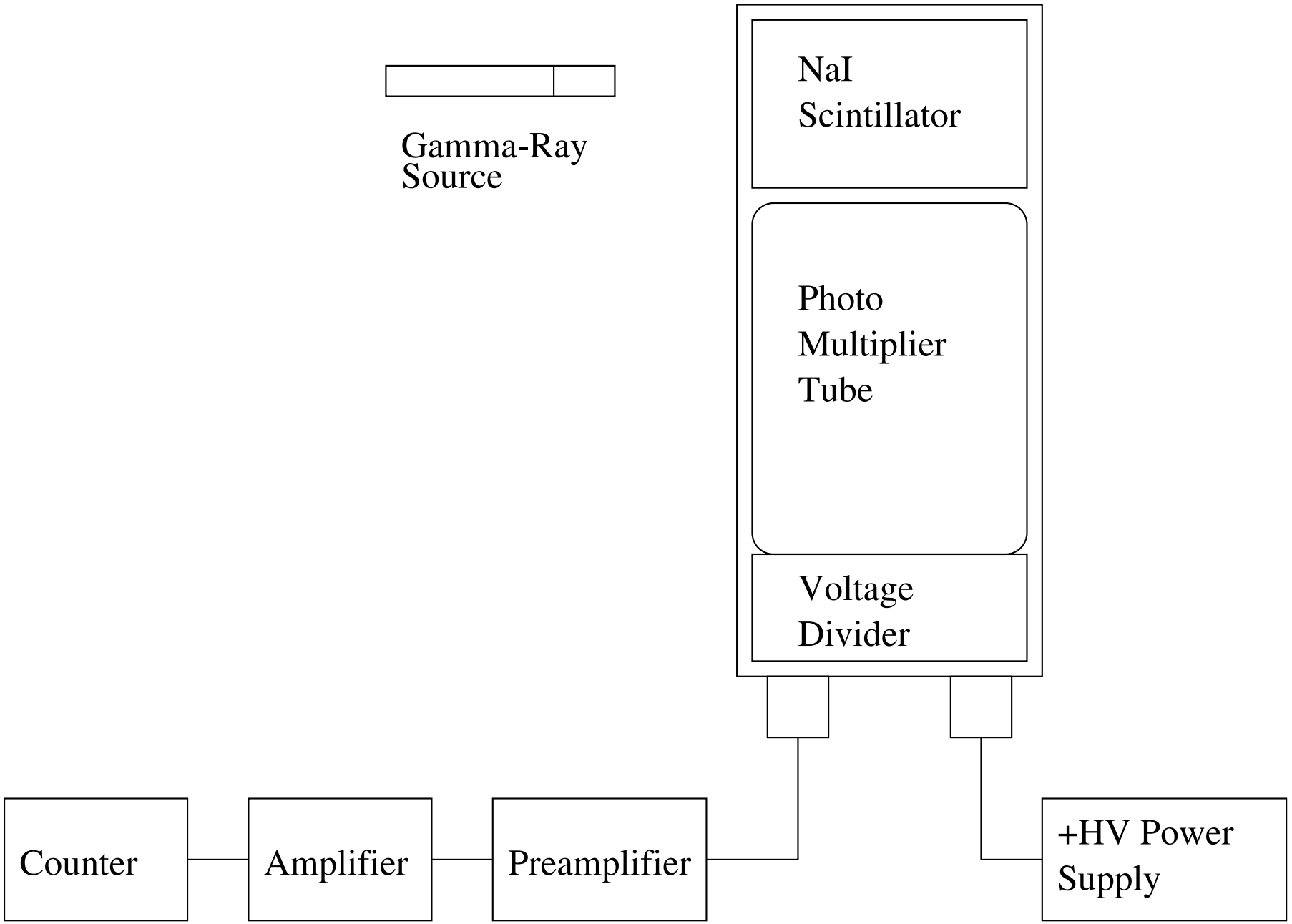
Gamma-Ray
Source
NaI
Scintillator
Photo
Multiplier
Tube
Voltage
Divider
Counter
Amplifier
Preamplifier
+HV Power
Supply