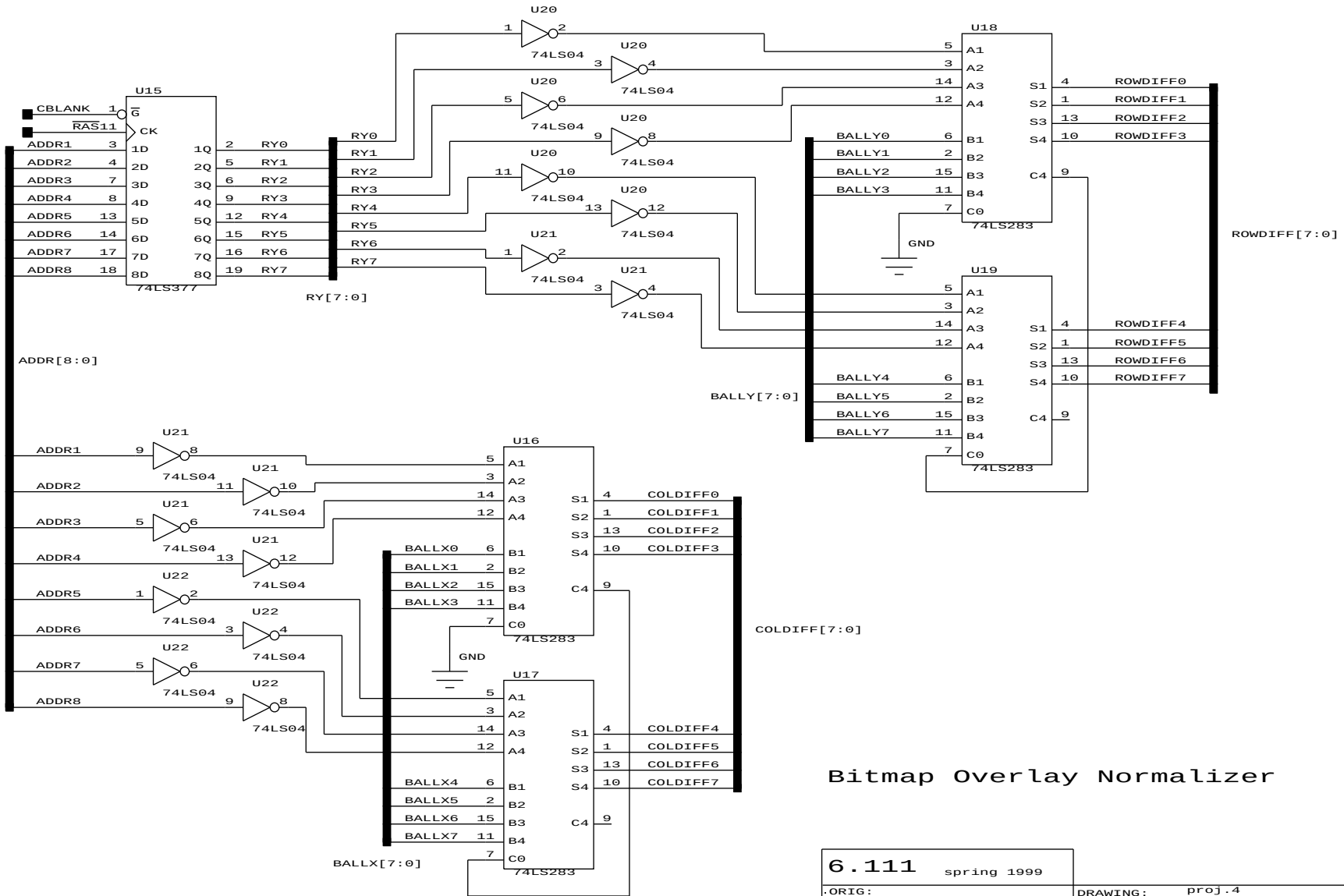

Bitmap Overlay Normalizer

6.111 spring 1999		
ORIG:	DRAWING: proj.4	
CHK:	SIZE B / SCALE N/A / SHEET	