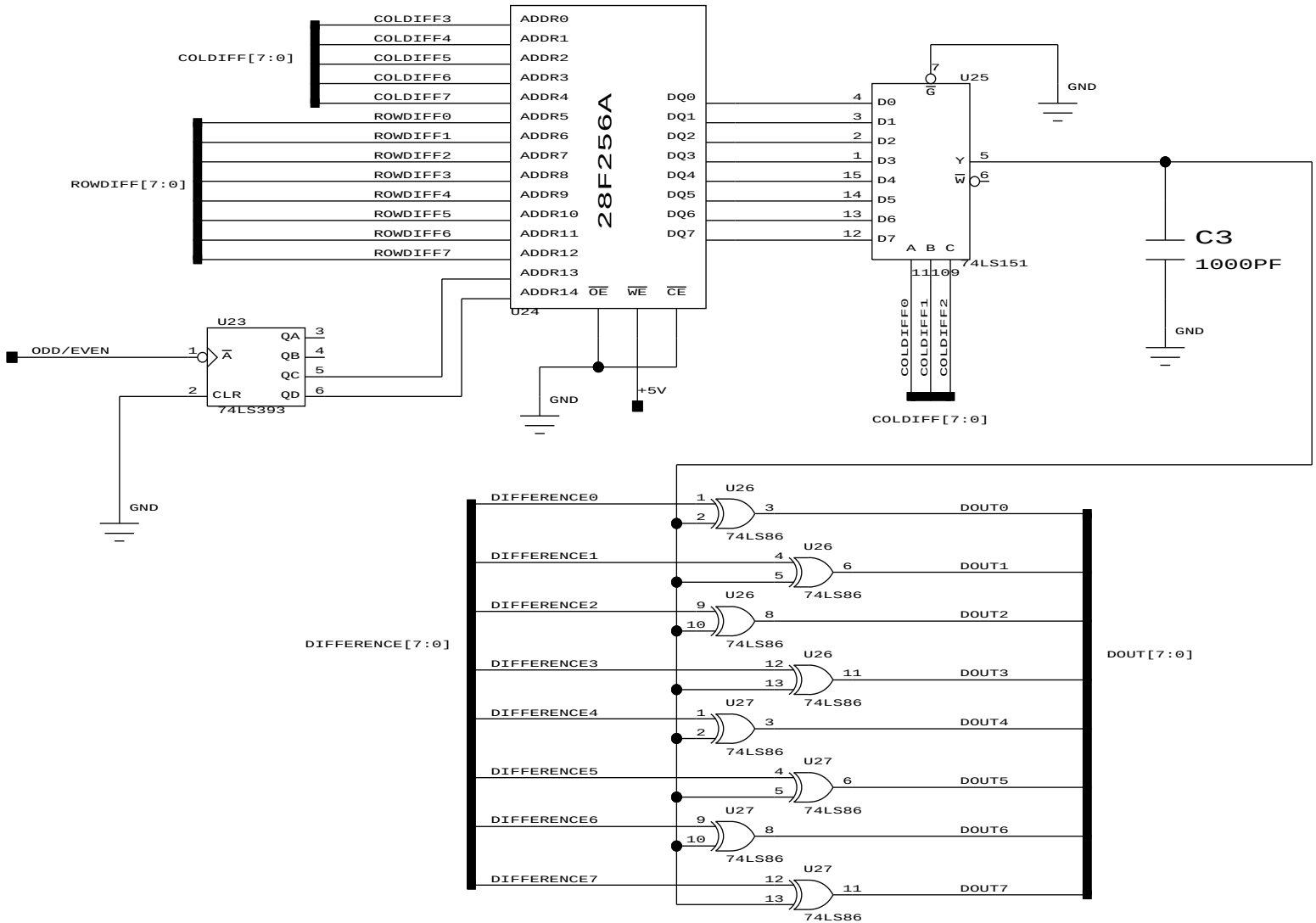

Bitmap Overlay Output

6.111 spring 1999	
ORIG:	DRAWING: proj.5
CHK:	SIZE B / SCALE N/A / SHEET