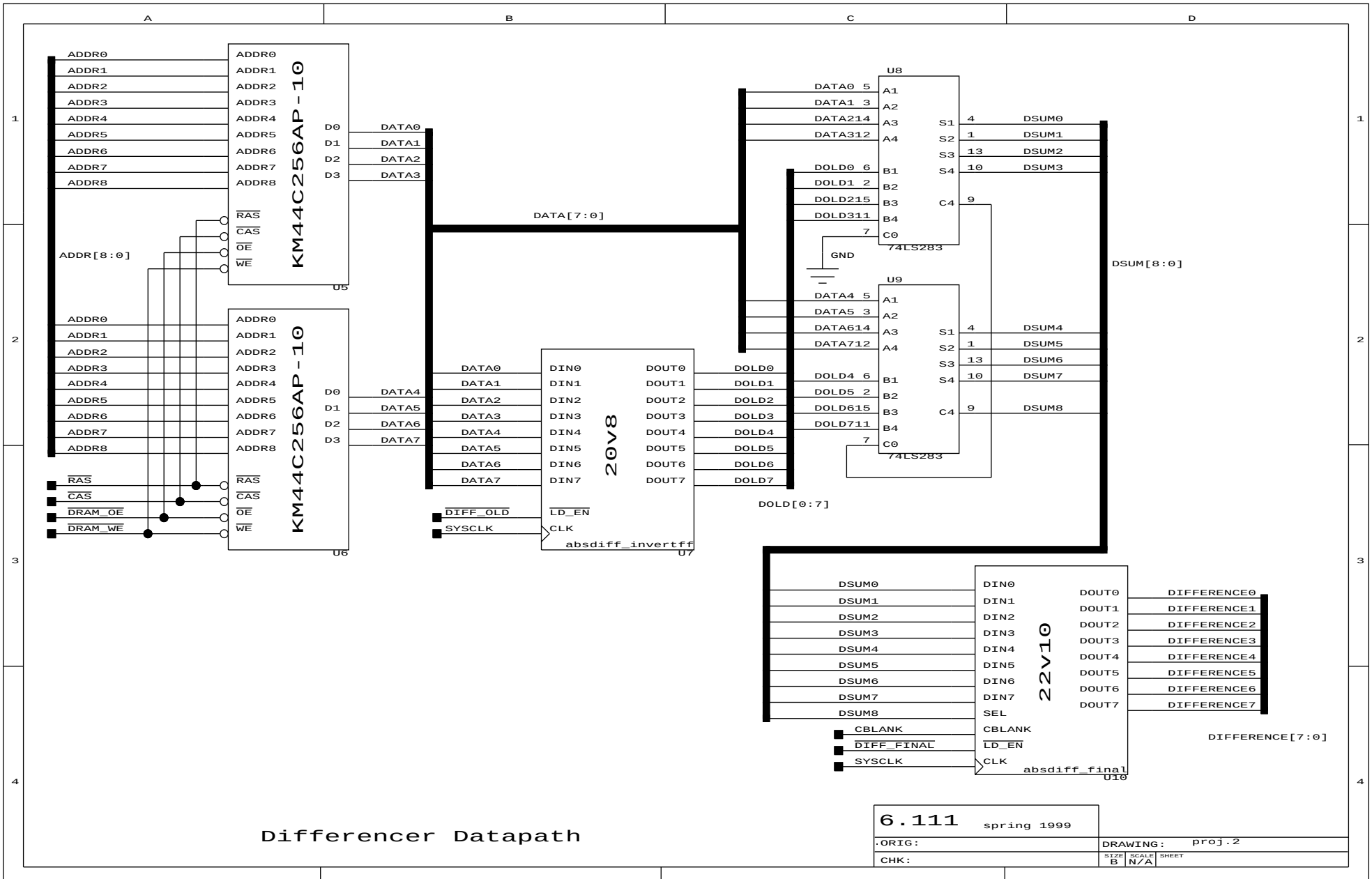


Differencer Datapath

| | | |
|---|---|---|
| 6.111 spring 1999 | | |
| ORIG: | DRAWING: proj.2 | |
| CHK: | SIZE B / SCALE N/A / SHEET | |