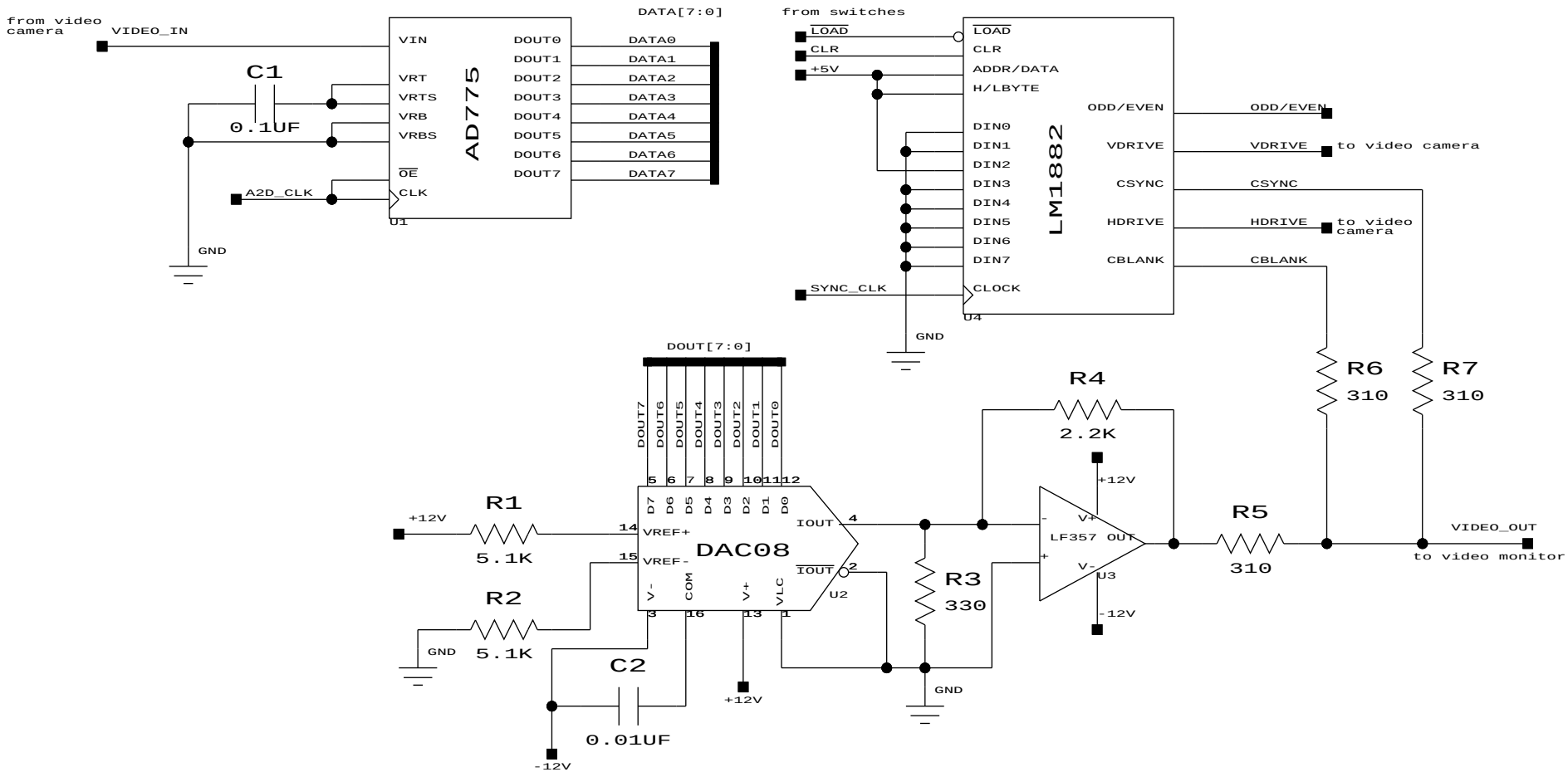

video inputs and outputs

6.111 spring 1999		
ORIG: Jacob Strauss	DRAWING: proj.1	
CHK:	SIZE B / SCALE N/A / SHEET	