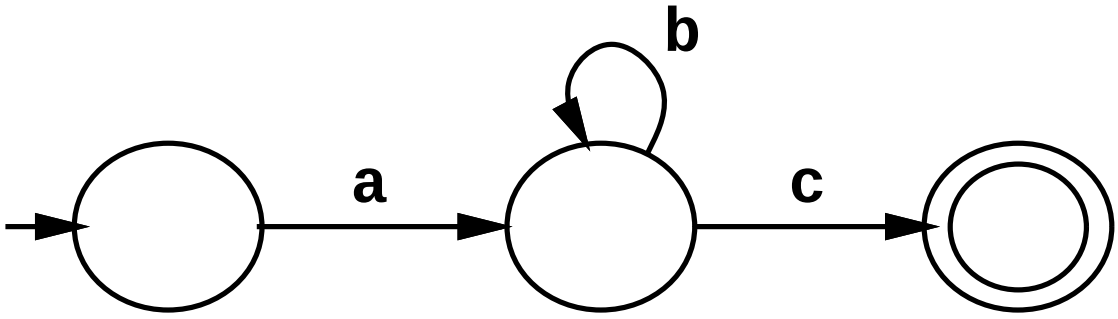
b
a
c

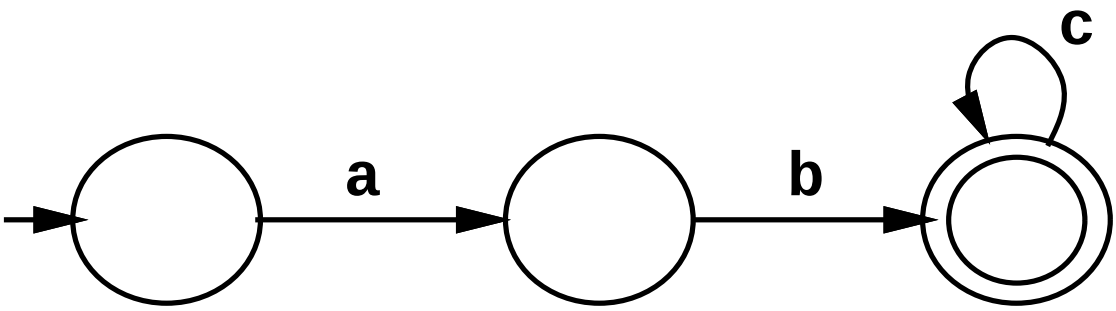
c
a
b

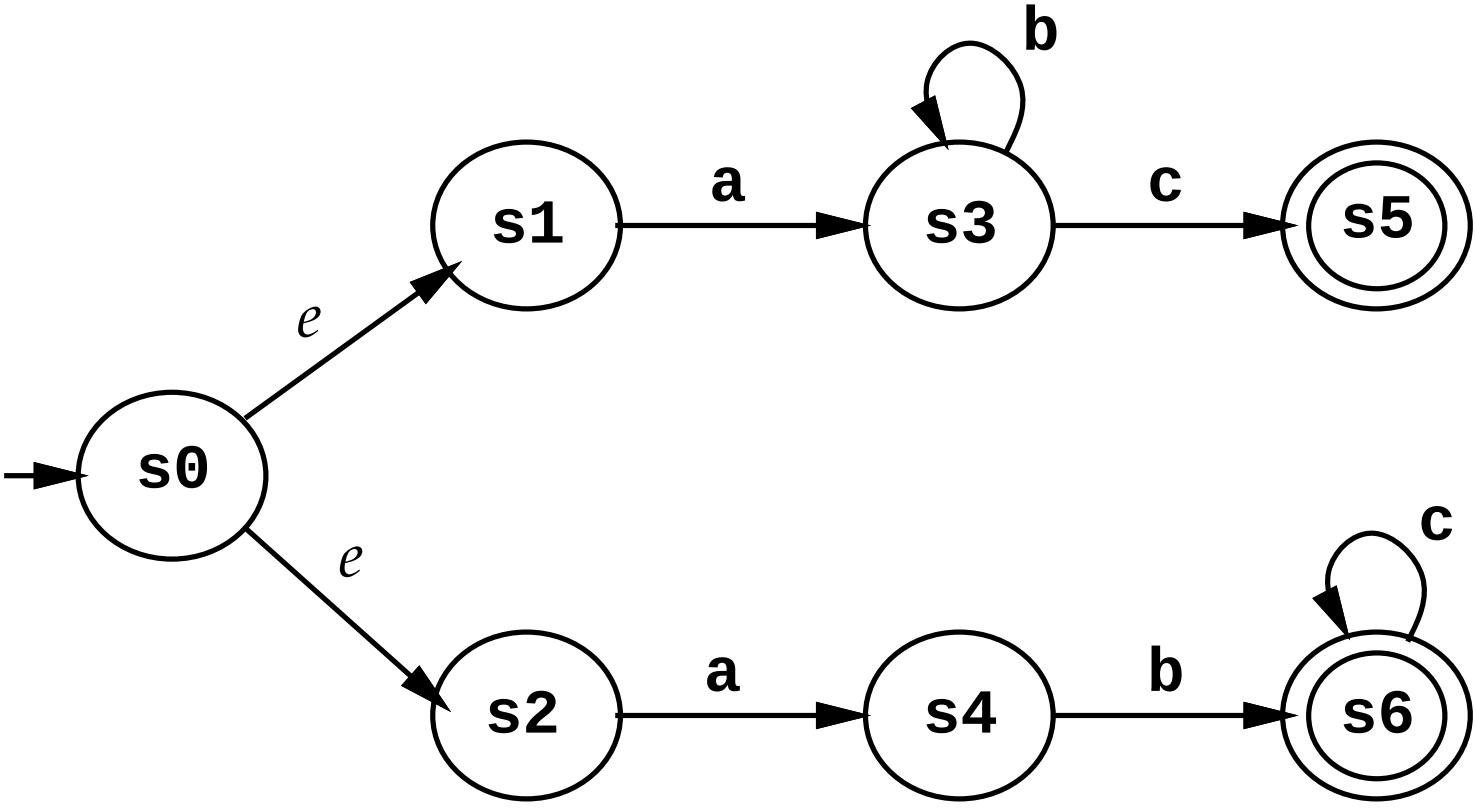
b
s1
a
s3
c
s5
e
s0
e
c
s2
a
s4
b
s6