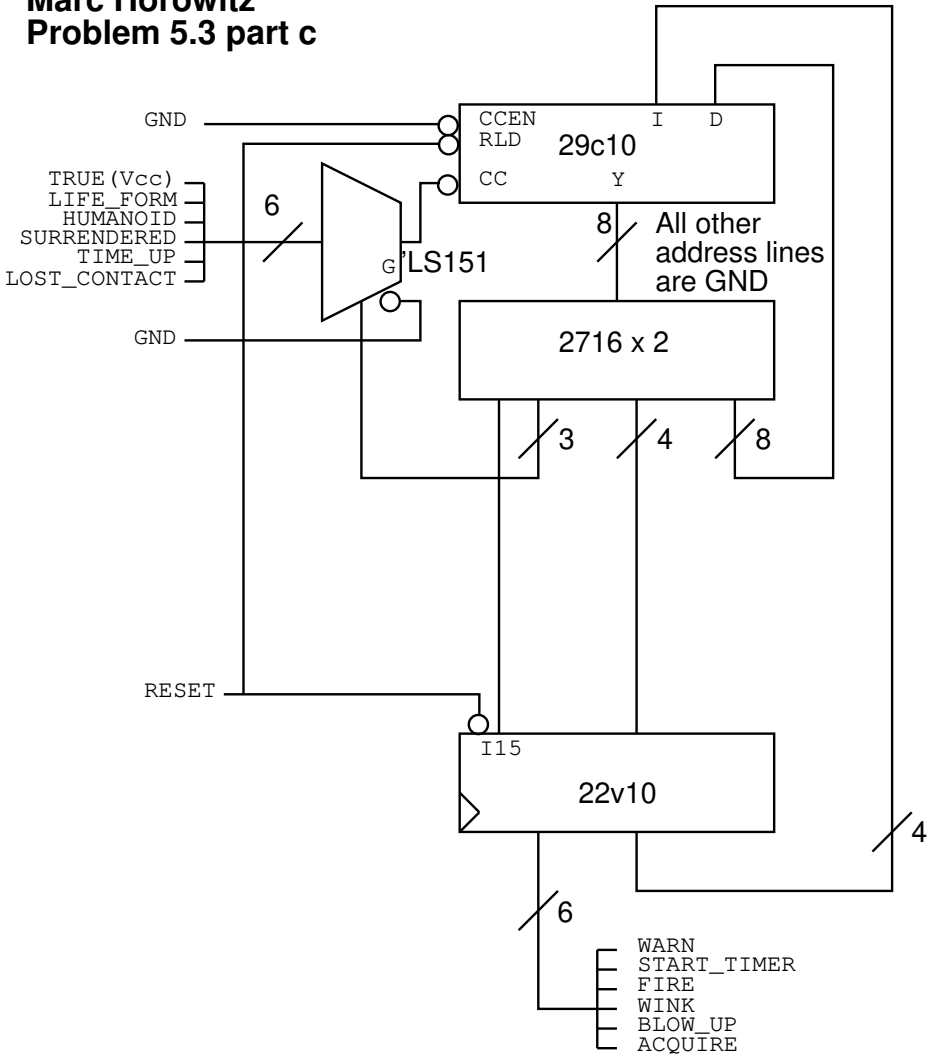Marc Horowitz
Problem 5.3 part c