8X930A*x* Universal Serial Bus Microcontroller User's Manual

intel®

8X930A*x* Universal Serial Bus Microcontroller User's Manual

July 1996

Information in this document is provided in connection with Intel products. No license, express or implied, by estoppel or otherwise, to any intellectual property rights is granted by this document. Except as provided in Intel's Terms and Conditions of Sale for such products, Intel assumes no liability whatsoever, and Intel disclaims any express or implied warranty, relating to sale and/or use of Intel products including liability or warranties relating to fitness for a particular purpose, merchantability, or infringement of any patent, copyright or other intellectual property right. Intel products are not intended for use in medical, life saving, or life sustaining applications.

Intel retains the right to make changes to specifications and product descriptions at any time, without notice.

Contact your local Intel sales office or your distributor to obtain the latest specifications and before placing your product order.

*Third-party brands and names are the property of their respective owners.

Copies of documents which have an ordering number and are referenced in this document, or other Intel literature, may be obtained from:

Intel Corporation
Literature Sales
P.O. Box 7641
Mt. Prospect, IL 60056-7641

or call 1-800-879-4683

© INTEL CORPORATION, July 1996

CHAPTER 1
GUIDE TO THIS MANUAL
1.1 MANUAL CONTENTS 1-1
1.2 NOTATIONAL CONVENTIONS AND TERMINOLOGY 1-3
1.3 RELATED DOCUMENTS 1-5
1.3.1 Data Sheet 1-6
1.3.2 Application Notes 1-6
1.4 APPLICATION SUPPORT SERVICES 1-7
1.4.1 World Wide Web 1-7
1.4.2 CompuServe Forums 1-7
1.4.3 FaxBack Service 1-8
1.4.4 Bulletin Board System (BBS) 1-9

CHAPTER 2
INTRODUCTION
2.1 PRODUCT OVERVIEW 2-3
2.1.1 8X930Ax Features 2-4
2.2 MCS 251 MICROCONTROLLER CORE 2-6
2.2.1 CPU 2-6
2.2.2 Clock and Reset Unit 2-7
2.2.3 Interrupt Handler 2-8
2.3 ON-CHIP MEMORY 2-8
2.4 UNIVERSAL SERIAL BUS MODULE 2-10
2.5 ON-CHIP PERIPHERALS 2-10
2.5.1 Timer/Counters and Watchdog Timer 2-10
2.5.2 Programmable Counter Array (PCA) 2-10
2.5.3 Serial I/O Port 2-11
2.6 OPERATING CONDITIONS 2-11

CHAPTER 3
MEMORY PARTITIONS
3.1 ADDRESS SPACES FOR 8X930Ax 3-1
3.1.1 Compatibility with the MCS® 51 Architecture 3-2
3.2 8X930Ax MEMORY SPACE 3-5
3.2.1 On-chip General-purpose Data RAM 3-8
3.2.2 On-chip Code Memory 3-8
3.2.2.1 Accessing On-chip Code Memory in Region 00: 3-9
3.2.3 External Memory 3-9
3.3 8X930Ax REGISTER FILE 3-9
3.4 BYTE, WORD, AND DWORD REGISTERS 3-12
3.4.1 Dedicated Registers 3-12
3.4.1.1 Accumulator and B Register 3-12
3.4.1.2 Extended Data Pointer, DPX 3-13

3.4.1.3 Extended Stack Pointer, SPX 3-14
3.5 SPECIAL FUNCTION REGISTERS (SFRS) 3-15

CHAPTER 4
DEVICE CONFIGURATION
4.1 CONFIGURATION OVERVIEW 4-1
4.2 DEVICE CONFIGURATION 4-1
4.3 THE CONFIGURATION BITS.... 4-4
4.4 CONFIGURING THE EXTERNAL MEMORY INTERFACE.... 4-7
4.4.1 Page Mode and Nonpage Mode (PAGE#) 4-7
4.4.2 Configuration Bits RD1:0 4-8
4.4.2.1 RD1:0 = 00 (18 External Address Bits) 4-10
4.4.2.2 RD1:0 = 01 (17 External Address Bits) 4-10
4.4.2.3 RD1:0 = 10 (16 External Address Bits) 4-10
4.4.2.4 RD1:0 = 11 (Compatible with MCS 51 Microcontrollers) 4-11
4.4.3 Wait State Configuration Bits 4-11
4.4.3.1 Configuration Bits WSA1:0#, WSB1:0# 4-11
4.4.3.2 Configuration Bit XALE# 4-11
4.5 OPCODE CONFIGURATIONS (SRC).... 4-12
4.5.1 Selecting Binary Mode or Source Mode 4-12
4.6 MAPPING ON-CHIP CODE MEMORY TO DATA MEMORY (EMAP#) 4-14
4.7 INTERRUPT MODE (INTR).... 4-14

CHAPTER 5
INSTRUCTIONS AND ADDRESSING
5.1 SOURCE MODE OR BINARY MODE OPCODES 5-1
5.2 PROGRAMMING FEATURES OF THE 8X930Ax ARCHITECTURE.... 5-1
5.2.1 Data Types 5-2
5.2.1.1 Order of Byte Storage for Words and Double Words 5-2
5.2.2 Register Notation 5-2
5.2.3 Address Notation 5-2
5.2.4 Addressing Modes 5-4
5.3 DATA INSTRUCTIONS 5-4
5.3.1 Data Addressing Modes 5-4
5.3.1.1 Register Addressing 5-5
5.3.1.2 Immediate 5-5
5.3.1.3 Direct 5-5
5.3.1.4 Indirect 5-6
5.3.1.5 Displacement 5-7
5.3.2 Arithmetic Instructions 5-8
5.3.3 Logical Instructions 5-9
5.3.4 Data Transfer Instructions 5-9
5.4 BIT INSTRUCTIONS 5-10
5.4.1 Bit Addressing 5-10

5.5 CONTROL INSTRUCTIONS 5-11
5.5.1 Addressing Modes for Control Instructions 5-12
5.5.2 Conditional Jumps 5-13
5.5.3 Unconditional Jumps 5-14
5.5.4 Calls and Returns 5-14
5.6 PROGRAM STATUS WORDS 5-15

CHAPTER 6
INTERRUPT SYSTEM
6.1 OVERVIEW 6-1
6.2 8X930Ax INTERRUPT SOURCES 6-3
6.2.1 External Interrupts 6-3
6.2.2 Timer Interrupts 6-5
6.3 PROGRAMMABLE COUNTER ARRAY (PCA) INTERRUPT 6-5
6.4 SERIAL PORT INTERRUPT 6-6
6.5 USB INTERRUPTS 6-6
6.5.1 USB Function Interrupt 6-6
6.5.2 USB Start of Frame Interrupt 6-9
6.5.3 USB Global Suspend/Resume Interrupt 6-10
6.5.3.1 Global Suspend 6-10
6.5.3.2 Global Resume 6-10
6.5.3.3 USB Remote Wake-up 6-10
6.6 INTERRUPT ENABLE 6-11
6.7 INTERRUPT PRIORITIES 6-13
6.8 INTERRUPT PROCESSING 6-16
6.8.1 Minimum Fixed Interrupt Time 6-17
6.8.2 Variable Interrupt Parameters 6-17
6.8.2.1 Response Time Variables 6-17
6.8.2.2 Computation of Worst-case Latency With Variables 6-19
6.8.2.3 Latency Calculations 6-20
6.8.2.4 Blocking Conditions 6-21
6.8.2.5 Interrupt Vector Cycle 6-21
6.8.3 ISRs in Process 6-22

CHAPTER 7
UNIVERSAL SERIAL BUS
7.1 USB FUNCTION INTERFACE 7-1
7.1.1 Serial Bus Interface Engine (SIE) 7-1
7.1.2 Function Interface Unit (FIU) 7-1
7.1.3 Special Function Registers (SFRs) 7-2
7.1.4 USB Function FIFO’s 7-4
7.1.5 The FIU SFR Set 7-4
7.2 TRANSMIT FIFOS 7-14
7.2.1 Transmit FIFO Overview 7-14

7.2.2 Transmit FIFO Registers 7-15
7.2.3 Transmit Data Register (TXDAT) 7-15
7.2.4 Transmit Byte Count Registers (TXCNTL/TXCNTH) 7-15
7.2.5 Transmit Data Set Management 7-17
7.3 RECEIVE FIFOs 7-24
7.3.1 Receive FIFO Overview 7-24
7.3.2 Receive FIFO Registers 7-25
7.3.2.1 Receive Data Register (RXDAT) 7-25
7.3.2.2 Receive Byte Count Registers (RXCNTL/RXCNTH) 7-25
7.3.3 Receive FIFO Data Set Management 7-26
7.4 SIE DETAILS 7-33
7.5 SETUP TOKEN RECEIVE FIFO HANDLING 7-33
7.6 ISO DATA MANAGEMENT 7-34
7.6.1 Transmit FIFO ISO Data Management 7-34
7.6.2 Receive FIFO ISO Data Management 7-35

CHAPTER 8
USB PROGRAMMING MODELS
8.1 OVERVIEW OF PROGRAMMING MODELS 8-1
8.1.1 Unenumerated State 8-2
8.1.2 Idle State 8-2
8.1.3 Transmit and Receive Routines 8-2
8.1.4 USB Interrupts 8-2
8.2 TRANSMIT OPERATIONS 8-3
8.2.1 Overview 8-3
8.2.2 Pre-transmit Operations 8-5
8.2.3 Post-transmit Operations 8-6
8.3 RECEIVE OPERATIONS 8-8
8.3.1 Overview 8-8
8.3.2 Post-receive Operations 8-9
8.4 SETUP TOKEN 8-12
8.5 START OF FRAME (SOF) TOKEN 8-14

CHAPTER 9
INPUT/OUTPUT PORTS
9.1 INPUT/OUTPUT PORT OVERVIEW 9-1
9.2 I/O CONFIGURATIONS 9-2
9.3 PORT 1 AND PORT 3 9-2
9.4 PORT 0 AND PORT 2 9-2
9.5 READ-MODIFY-WRITE INSTRUCTIONS 9-4
9.6 QUASI-BIDIRECTIONAL PORT OPERATION 9-5
9.7 PORT LOADING 9-6
9.8 EXTERNAL MEMORY ACCESS 9-6

CHAPTER 10
TIMER/COUNTERS AND WATCHDOG TIMER

10.1 TIMER/COUNTER OVERVIEW 10-1
10.2 TIMER/COUNTER OPERATION 10-1
10.3 TIMER 0 10-4
10.3.1 Mode 0 (13-bit Timer) 10-5
10.3.2 Mode 1 (16-bit Timer) 10-5
10.3.3 Mode 2 (8-bit Timer With Auto-reload) 10-5
10.3.4 Mode 3 (Two 8-bit Timers) 10-6
10.4 TIMER 1 10-6
10.4.1 Mode 0 (13-bit Timer) 10-7
10.4.2 Mode 1 (16-bit Timer) 10-7
10.4.3 Mode 2 (8-bit Timer with Auto-reload) 10-10
10.4.4 Mode 3 (Halt) 10-10
10.5 TIMER 0/1 APPLICATIONS 10-10
10.5.1 Auto-load Setup Example 10-10
10.5.2 Pulse Width Measurements 10-11
10.6 TIMER 2 10-11
10.6.1 Capture Mode 10-12
10.6.2 Auto-reload Mode 10-13
10.6.2.1 Up Counter Operation 10-13
10.6.3 Up/Down Counter Operation 10-14
10.6.4 Baud Rate Generator Mode 10-15
10.6.5 Clock-out Mode 10-15
10.7 WATCHDOG TIMER 10-17
10.7.1 Description 10-17
10.7.2 Using the WDT 10-19
10.7.3 WDT During Idle Mode 10-19
10.7.4 WDT During PowerDown 10-19

CHAPTER 11
PROGRAMMABLE COUNTER ARRAY

11.1 PCA DESCRIPTION 11-1
11.1.1 Alternate Port Usage 11-2
11.2 PCA TIMER/COUNTER 11-2
11.3 PCA COMPARE/CAPTURE MODULES 11-5
11.3.1 16-bit Capture Mode 11-5
11.3.2 Compare Modes 11-6
11.3.3 16-bit Software Timer Mode 11-7
11.3.4 High-speed Output Mode 11-8
11.3.5 PCA Watchdog Timer Mode 11-9
11.3.6 Pulse Width Modulation Mode 11-10

CHAPTER 12
SERIAL I/O PORT

12.1 OVERVIEW 12-1
12.2 MODES OF OPERATION 12-2
12.2.1 Synchronous Mode (Mode 0) 12-2
12.2.1.1 Transmission (Mode 0) 12-2
12.2.1.2 Reception (Mode 0) 12-3
12.2.2 Asynchronous Modes (Modes 1, 2, and 3) 12-7
12.2.2.1 Transmission (Modes 1, 2, 3) 12-7
12.2.2.2 Reception (Modes 1, 2, 3) 12-7
12.3 FRAMING BIT ERROR DETECTION (MODES 1, 2, AND 3) 12-7
12.4 MULTIPROCESSOR COMMUNICATION (MODES 2 AND 3) 12-8
12.5 AUTOMATIC ADDRESS RECOGNITION 12-8
12.5.1 Given Address 12-8
12.5.2 Broadcast Address 12-9
12.5.3 Reset Addresses 12-10
12.6 BAUD RATES 12-10
12.6.1 Baud Rate for Mode 0 † 12-10
12.6.2 Baud Rates for Mode 2 12-11
12.6.3 Baud Rates for Modes 1 and 3 † 12-11
12.6.3.1 Timer 1 Generated Baud Rates (Modes 1 and 3) † 12-11
12.6.3.2 Selecting Timer 1 as the Baud Rate Generator † 12-11
12.6.3.3 Timer 2 Generated Baud Rates (Modes 1 and 3) 12-12
12.6.3.4 Selecting Timer 2 as the Baud Rate Generator † 12-12

CHAPTER 13
MINIMUM HARDWARE SETUP

13.1 MINIMUM HARDWARE SETUP 13-1
13.2 ELECTRICAL ENVIRONMENT 13-1
13.2.1 Power and Ground Pins 13-2
13.2.2 Unused Pins 13-2
13.2.3 Noise Considerations 13-2
13.3 CLOCK SOURCES 13-2
13.3.1 On-chip Oscillator (Crystal) 13-2
13.3.2 On-chip Oscillator (Ceramic Resonator) 13-3
13.3.3 External Clock 13-3
13.4 RESET 13-4
13.4.1 Externally Initiated Resets 13-5
13.4.2 WDT Initiated Resets 13-5
13.4.3 USB Initiated Resets 13-5
13.4.4 Reset Operation 13-6
13.4.5 Power-on Reset 13-6

CHAPTER 14
SPECIAL OPERATING MODES

14.1 GENERAL 14-1
14.2 POWER CONTROL REGISTERS 14-1
14.2.1 Serial I/O Control Bits 14-1
14.2.2 Power Off Flag 14-1
14.3 IDLE MODE 14-5
14.3.1 Entering Idle Mode 14-5
14.3.2 Exiting Idle Mode 14-5
14.4 USB POWER CONTROL 14-6
14.4.1 Global Suspend Mode 14-6
14.4.1.1 Powerdown Mode 14-6
14.4.1.2 Entering Powerdown Mode 14-7
14.4.1.3 Exiting Powerdown Mode 14-7
14.4.2 Global Resume Mode 14-8
14.4.3 USB Remote Wake-up 14-8
14.5 LOW CLOCK MODE 14-8
14.5.1 Entering Low Clock Mode 14-8
14.5.2 Exiting Low Clock Mode 14-9
14.6 ON-CIRCUIT EMULATION (ONCE) MODE 14-9
14.6.1 Entering ONCE Mode 14-9
14.6.2 Exiting ONCE Mode 14-9

CHAPTER 15
EXTERNAL MEMORY INTERFACE

15.1 OVERVIEW 15-1
15.2 EXTERNAL BUS CYCLES 15-3
15.2.1 Bus Cycle Definitions 15-3
15.2.2 Nonpage Mode Bus Cycles 15-3
15.2.3 Page Mode Bus Cycles 15-6
15.3 WAIT STATES 15-8
15.4 EXTERNAL BUS CYCLES WITH CONFIGURABLE WAIT STATES 15-8
15.4.1 Extending RD#/WR#/PSEN# 15-8
15.4.2 Extending ALE 15-10
15.5 EXTERNAL BUS CYCLES WITH REAL-TIME WAIT STATES 15-11
15.5.1 Real-time WAIT# Enable (RTWE) 15-12
15.5.2 Real-time WAIT CLOCK Enable (RTWCE) 15-12
15.5.3 Real-time Wait State Bus Cycle Diagrams 15-12
15.6 CONFIGURATION BYTE BUS CYCLES 15-15
15.7 PORT 0 AND PORT 2 STATUS 15-15
15.7.1 Port 0 and Port 2 Pin Status in Nonpage Mode 15-16
15.7.2 Port 0 and Port 2 Pin Status in Page Mode 15-16
15.8 EXTERNAL MEMORY DESIGN EXAMPLES 15-17

15.8.1 Example 1: RD1:0 = 00, 18-bit Bus, External Flash and RAM 15-18
15.8.2 Example 2: RD1:0 = 01, 17-bit Bus, External Flash and RAM 15-20
15.8.3 Example 3: RD1:0 = 01, 17-bit Bus, External RAM 15-22
15.8.4 Example 4: RD1:0 = 10, 16-bit Bus, External RAM 15-24
15.8.5 Example 5: RD1:0 = 11, 16-bit Bus, External EPROM and RAM 15-26
15.8.5.1 An Application Requiring Fast Access to the Stack 15-26
15.8.5.2 An Application Requiring Fast Access to Data 15-26
15.8.6 Example 6: RD1:0 = 11, 16-bit Bus, External EPROM and RAM 15-29
15.8.7 Example 7: RD1:0 = 01, 17-bit Bus, External Flash 15-30

CHAPTER 16
VERIFYING NONVOLATILE MEMORY

16.1 GENERAL..... 16-1
16.1.1 Considerations for On-chip Program Code Memory 16-1
16.2 VERIFY MODES..... 16-3
16.3 GENERAL SETUP..... 16-3
16.4 VERIFY ALGORITHM..... 16-4
16.5 LOCK BIT SYSTEM..... 16-5
16.5.1 Encryption Array 16-5
16.6 SIGNATURE BYTES 16-6

APPENDIX A
INSTRUCTION SET REFERENCE

A.1 NOTATION FOR INSTRUCTION OPERANDS..... A-2
A.2 OPCODE MAP AND SUPPORTING TABLES A-4
A.3 INSTRUCTION SET SUMMARY..... A-11
A.3.1 Execution Times for Instructions Accessing the Port SFRs A-11
A.3.2 Instruction Summaries A-14
A.4 INSTRUCTION DESCRIPTIONS A-26

APPENDIX B
SIGNAL DESCRIPTIONS

APPENDIX C
REGISTERS

C.1 SFRS BY FUNCTIONAL CATEGORY C-2
C.2 SFR DESCRIPTIONS..... C-6

APPENDIX D
DATA FLOW MODEL

GLOSSARY

INDEX

FIGURES

Figure		Page
2-1	8X930Ax in a Universal Serial Bus System	2-1
2-2	Functional Block Diagram of the 8X930Ax	2-2
2-3	8X930Ax USB Module Block Diagram	2-3
2-4	The CPU	2-6
2-5	Clocking Definitions (PLL off)	2-9
2-6	Clocking Definitions (PLL on)	2-9
3-1	Address Spaces for the 8X930Ax	3-1
3-2	Address Spaces for the MCS® 51 Architecture	3-3
3-3	Address Space Mappings MCS® 51 Architecture to MCS® 251 Architecture	3-4
3-4	8X930Ax Address Space	3-6
3-5	Hardware Implementation of the 8X930Ax Address Space	3-7
3-6	The Register File	3-10
3-7	Register File Locations 0–7	3-11
3-8	Dedicated Registers in the Register File and their Corresponding SFRs	3-13
4-1	Configuration Array (On-chip)	4-2
4-2	Configuration Array (External)	4-3
4-3	User Configuration Byte 0 (UCONFIG0)	4-5
4-4	User Configuration Byte 1 (UCONFIG1)	4-6
4-5	Internal/External Address Mapping (RD1:0 = 00 and 01)	4-8
4-6	Internal/External Address Mapping (RD1:0 = 10 and 11)	4-9
4-7	Binary Mode Opcode Map	4-13
4-8	Source Mode Opcode Map	4-13
5-1	Word and Double-word Storage in Big Endien Form	5-3
5-2	Program Status Word Register	5-17
5-3	Program Status Word 1 Register	5-18
6-1	Interrupt Control System	6-2
6-2	USB Function Interrupt Enable Register	6-7
6-3	USB Function Interrupt Flag Register	6-9
6-4	Interrupt Enable Register 0	6-11
6-5	USB Interrupt Enable Register	6-12
6-6	IPH0: Interrupt Priority High Register 0	6-14
6-7	IPL0: Interrupt Priority Low Register 0	6-14
6-8	IPH1: Interrupt Priority High Register 1	6-15
6-9	IPL1: Interrupt Priority Low Register 1	6-15
6-10	The Interrupt Process	6-16
6-11	Response Time Example #1	6-18
6-12	Response Time Example #2	6-19
7-1	EPINDEX: Endpoint Index Register	7-5
7-2	EPCON: Control Endpoint Register	7-7
7-3	TXSTAT: Transmit FIFO Status Register	7-9
7-4	RXSTAT: Receive FIFO Status Register	7-11
7-5	SOFH: Start of Frame High Register	7-12
7-6	SOFL: Start of Frame Low Register	7-13
7-7	FADDR: Function Address Register	7-13

FIGURES

Figure		Page
7-8	Transmit FIFO Outline	7-14
7-9	Transmit Byte Count Registers	7-16
7-10	TXDAT: Transmit FIFO Data Register	7-18
7-11	TXCNTH/TXCNTL Transmit FIFO Byte Count Registers	7-19
7-12	TXCON: Transmit FIFO Control Register	7-21
7-13	TXFLG: Transmit FIFO Flag Register	7-23
7-14	Receive FIFO	7-25
7-15	RXDAT: Receive FIFO Data Register	7-27
7-16	RXCNTH/RXCNTL: Receive FIFO Byte Count Registers	7-28
7-17	RXCON: Receive FIFO Control Register	7-30
7-18	RXFLG: Receive FIFO Flag Register	7-32
8-1	Program Flow	8-1
8-2	High-level View of Transmit Operations	8-4
8-3	Pre-transmit ISR (Non-Isochronous)	8-5
8-4	Post-transmit ISR (Non-isochronous)	8-6
8-5	Post-transmit ISR (Isochronous)	8-7
8-6	High-level View of Receive Operations	8-9
8-7	Post-receive ISR (Non-isochronous)	8-10
8-8	Receive SOF ISR (Isochronous)	8-11
8-9	Post-receive ISR (Control)	8-13
8-10	Hardware Operations for SOF Token	8-14
9-1	Port 1 and Port 3 Structure	9-3
9-2	Port 0 Structure	9-3
9-3	Port 2 Structure	9-4
9-4	Internal Pullup Configurations	9-6
10-1	Basic Logic of the Timer/Counters	10-3
10-2	Timer 0/1 in Mode 0 and Mode 1	10-5
10-3	Timer 0/1 in Mode 2, Auto-Reload	10-6
10-4	Timer 0 in Mode 3, Two 8-bit Timers	10-7
10-5	TMOD: Timer/Counter Mode Control Register	10-8
10-6	TCON: Timer/Counter Control Register	10-9
10-7	Timer 2: Capture Mode	10-12
10-8	Timer 2: Auto Reload Mode (DCEN = 0)	10-13
10-9	Timer 2: Auto Reload Mode (DCEN = 1)	10-14
10-10	Timer 2: Clock Out Mode	10-16
10-11	T2MOD: Timer 2 Mode Control Register	10-17
10-12	T2CON: Timer 2 Control Register	10-18
11-1	Programmable Counter Array	11-3
11-2	PCA 16-bit Capture Mode	11-6
11-3	PCA Software Timer and High-speed Output Modes	11-8
11-4	PCA Watchdog Timer Mode	11-10
11-5	PCA 8-bit PWM Mode	11-11
11-6	PWM Variable Duty Cycle	11-12
11-7	CMOD: PCA Timer/Counter Mode Register	11-13

FIGURES

Figure		Page
11-8	CCON: PCA Timer/Counter Control Register	11-14
11-9	CCAPMx: PCA Compare/Capture Module Mode Registers	11-15
12-1	Serial Port Block Diagram	12-3
12-2	SCON: Serial Port Control Register	12-5
12-3	Mode 0 Timing	12-6
12-4	Data Frame (Modes 1, 2, and 3)	12-6
12-5	Timer 2 in Baud Rate Generator Mode	12-14
13-1	Minimum Setup	13-1
13-2	CHMOS On-chip Oscillator	13-3
13-3	External Clock Connection for the 8X930Ax	13-4
13-4	External Clock Drive Waveforms	13-4
13-5	Reset Timing Sequence	13-7
14-1	Power Control (PCON) Register	14-2
14-2	USB Power Control (PCON1) Register	14-3
14-3	Idle and Powerdown Clock Control	14-4
14-4	Suspend/Resume Program with/without Remote Wake-up	14-10
15-1	Bus Structure in Nonpage Mode and Page Mode	15-1
15-2	External Code Fetch (Nonpage Mode)	15-4
15-3	External Data Read (Nonpage Mode)	15-5
15-4	External Data Write (Nonpage Mode)	15-5
15-5	External Code Fetch (Page Mode)	15-7
15-6	External Data Read (Page Mode)	15-7
15-7	External Data Write (Page Mode)	15-8
15-8	External Code Fetch (Nonpage Mode, One RD#/PSEN# Wait State)	15-9
15-9	External Data Write (Nonpage Mode, One WR# Wait State)	15-9
15-10	External Code Fetch (Nonpage Mode, One ALE Wait State)	15-10
15-11	Real-time Wait State Control Register (WCON)	15-11
15-12	External Code Fetch/Data Read (Nonpage Mode, Real-time Wait State)	15-13
15-13	External Data Write (Nonpage Mode, Real-time Wait State)	15-13
15-14	External Data Read (Page Mode, Real-time Wait State)	15-14
15-15	External Data Write (Page Mode, Real-time Wait State)	15-14
15-16	Configuration Byte Bus Cycles	15-15
15-17	Bus Diagram for Example 1: 80930AD in Page Mode	15-18
15-18	Address Space for Example 1	15-19
15-19	Bus Diagram for Example 2: 80930AD in Page Mode	15-20
15-20	Address Space for Example 2	15-21
15-21	Bus Diagram for Example 3: 83930AE in Nonpage Mode	15-22
15-22	Memory Space for Example 3	15-23
15-23	Bus Diagram for Example 4: 83930AE in Nonpage Mode	15-24
15-24	Address Space for Example 4	15-25
15-25	Bus Diagram for Example 5: 80930AD in Nonpage Mode	15-27
15-26	Address Space for Examples 5 and 6	15-28
15-27	Bus Diagram for Example 6: 80930AD in Page Mode	15-29
15-28	Bus Diagram for Example 7: 80930AD in Page Mode	15-30

FIGURES

Figure **Page**

16-1 Setup for Verifying Nonvolatile Memory 16-4
16-2 Verify Bus Cycles 16-4
B-1 8X930Ax 68-pin PLCC Package B-1

TABLES

Table		Page
1-1	Intel Application Support Services	1-7
2-1	8X930Ax Features Summary	2-5
2-2	8X930Ax Operating Frequency	2-8
3-1	Address Mappings	3-4
3-2	Minimum Times to Fetch Two Bytes of Code	3-9
3-3	Register Bank Selection	3-11
3-4	Dedicated Registers in the Register File and their Corresponding SFRs	3-14
3-5	8X930Ax SFR Map	3-16
3-6	Core SFRs	3-17
3-7	USB Function SFRs	3-18
3-8	I/O Port SFRs	3-19
3-9	Serial I/O SFRs	3-19
3-10	Timer/Counter and Watchdog Timer SFRs	3-19
3-11	Programmable Counter Array (PCA) SFRs	3-20
4-1	External Addresses for Configuration Array	4-2
4-2	Memory Signal Selections (RD1:0)	4-7
4-3	RD#, WR#, PSEN# External Wait States	4-11
4-4	Examples of Opcodes in Binary and Source Modes	4-14
5-1	Data Types	5-2
5-2	Notation for Byte Registers, Word Registers, and Dword Registers	5-3
5-3	Addressing Modes for Data Instructions in the MCS® 51 Architecture	5-5
5-4	Addressing Modes for Data Instructions in the MCS 251 Architecture	5-7
5-5	Bit-addressable Locations	5-11
5-6	Addressing Two Sample Bits	5-11
5-7	Addressing Modes for Bit Instructions	5-11
5-8	Addressing Modes for Control Instructions	5-13
5-9	Compare-conditional Jump Instructions	5-14
5-10	The Effects of Instructions on the PSW and PSW1 Flags	5-16
6-1	Interrupt System Input Signals	6-1
6-2	Interrupt System Special Function Registers	6-3
6-3	Interrupt Control Matrix	6-4
6-4	USB Interrupt Control Matrix	6-5
6-5	Level of Priority	6-13
6-6	Interrupt Priority Within Level	6-13
6-7	Interrupt Latency Variables	6-20
6-8	Actual vs. Predicted Latency Calculations	6-20
7-1	Signal Descriptions	7-2
7-2	USB Function SFRs	7-3
7-3	8X930Ax FIFO Configurations	7-4
7-4	Writing to the Byte Count Register	7-17
7-5	Truth Table for Transmit FIFO Management	7-18
7-6	Status of the Receive FIFO Data Sets	7-26
7-7	Truth Table for Receive FIFO Management	7-27
9-1	Input/Output Port Pin Descriptions	9-1

TABLES

Table		Page
9-2	Instructions for External Data Moves	9-7
10-1	External Signals	10-2
10-2	Timer/Counter and Watchdog Timer SFRs	10-4
10-3	Timer 2 Modes of Operation	10-16
11-1	PCA Special Function Registers (SFRs)	11-4
11-2	External Signals	11-4
11-3	PCA Module Modes	11-14
12-1	Serial Port Signals	12-2
12-2	Serial Port Special Function Registers	12-2
12-3	Summary of Baud Rates	12-11
12-4	Timer 1 Generated Baud Rates for Serial I/O Modes 1 and 3	12-12
12-5	Selecting the Baud Rate Generator(s)	12-13
12-6	Timer 2 Generated Baud Rates	12-14
14-1	Pin Conditions in Various Modes	14-4
15-1	External Memory Interface Signals	15-2
15-2	Bus Cycle Definitions (No Wait States)	15-4
15-3	Port 0 and Port 2 Pin Status In Normal Operating Mode	15-16
16-1	Signal Descriptions	16-2
16-2	Verify Modes	16-3
16-3	Lock Bit Function	16-5
16-4	Contents of the Signature Bytes	16-6
16-5	Timing Definitions	16-6
A-1	Notation for Register Operands	A-2
A-2	Notation for Direct Addresses	A-3
A-3	Notation for Immediate Addressing	A-3
A-4	Notation for Bit Addressing	A-3
A-5	Notation for Destinations in Control Instructions	A-3
A-6	Instructions for MCS® 51 Microcontrollers	A-4
A-7	Instructions for the 8X930Ax Architecture	A-5
A-8	Data Instructions	A-6
A-9	High Nibble, Byte 0 of Data Instructions	A-6
A-10	Bit Instructions	A-7
A-11	Byte 1 (High Nibble) for Bit Instructions	A-7
A-12	PUSH/POP Instructions	A-8
A-13	Control Instructions	A-8
A-14	Displacement/Extended MOVs	A-9
A-15	INC/DEC	A-10
A-16	Encoding for INC/DEC	A-10
A-17	Shifts	A-10
A-18	State Times to Access the Port SFRs	A-12
A-19	Summary of Add and Subtract Instructions	A-14
A-20	Summary of Compare Instructions	A-15
A-21	Summary of Increment and Decrement Instructions	A-15
A-22	Summary of Multiply, Divide, and Decimal-adjust Instructions	A-16

TABLES

Table		Page
A-23	Summary of Logical Instructions	A-17
A-24	Summary of Move Instructions	A-19
A-25	Summary of Exchange, Push, and Pop Instructions	A-22
A-26	Summary of Bit Instructions	A-23
A-27	Summary of Control Instructions	A-24
A-28	Flag Symbols	A-26
B-1	8X930Ax Pin Assignments Arranged by Functional Categories	B-2
B-2	Signal Descriptions	B-3
B-3	Memory Signal Selections (RD1:0)	B-6
B-4	8X930Ax Operating Frequency	B-6
C-1	8X930Ax SFR Map	C-1
C-2	Core SFRs	C-2
C-3	I/O Port SFRs	C-2
C-4	Serial I/O SFRs	C-3
C-5	USB Function SFRs	C-3
C-6	Timer/Counter and Watchdog Timer SFRs	C-4
C-7	Programmable Counter Array (PCA) SFRs	C-5
D-1	Non-isochronous Transmit Data Flow	D-1
D-2	Isochronous Transmit Data Flow in Dual-packet Mode	D-5
D-3	Non-isochronous Receive Data Flow in Single-packet Mode (RXSPM = 1)	D-8
D-4	Non-isochronous Receive Data Flow in Dual-packet Mode (RXSPM = 0)	D-11
D-5	Isochronous Receive Data Flow in Dual-packet Mode (RXSPM = 0)	D-18

1

Guide to this Manual

CHAPTER 1
GUIDE TO THIS MANUAL

This manual describes the 8X930A*x* microcontroller; a new family of products for universal serial bus (USB) applications. This manual is intended for use by both software and hardware designers familiar with the principles of microcontroller architecture.

1.1 MANUAL CONTENTS

This chapter provides an overview of the manual with brief summaries of the chapters and appendices. It also explains the terminology and notational conventions used throughout the manual, provides references to related documentation, and tells how to contact Intel for additional information.

Chapter 2, "Introduction" — provides an overview of device hardware. It covers core functions (pipelined CPU, clock and reset unit, and interrupts**)**, I/O ports, on-chip memory, and on-chip peripherals (USB, timer/counters, watchdog timer, programmable counter array, and serial I/O port).

Chapter 3, "Memory Partitions" — describes the three address spaces of the 8X930A*x*: memory address space, special function register (SFR) space, and the register file. It also provides a map of the SFR space showing the location of the SFRs and their reset values and explains the mapping of the address spaces relative to the MCS® 51 and MCS® 251 architectures into the address spaces of the 8X930A*x*.

Chapter 4, "Device Configuration" — describes microcontroller features that are configured at device reset, including the external memory interface (the number of external address bits, the number of wait states, page mode, memory regions for asserting RD#, WR#, and PSEN#), binary/source opcodes, interrupt mode, and the mapping of a portion of on-chip code memory to data memory. It describes the configuration bytes and how to program them for the desired configuration. It also describes how internal memory maps into external memory.

Chapter 5, "Instructions and Addressing" — provides an overview of the instruction set. It describes each instruction type (control, arithmetic, logical, etc.) and lists the instructions in tabular form. This chapter also discusses the addressing modes, bit instructions, and the program status words. Appendix A, "Instruction Set Reference" provides a detailed description of each instruction.

Chapter 6, "Interrupt System" — describes the 8X930A*x* interrupt circuitry which provides a TRAP instruction interrupt and ten maskable interrupts: two external interrupts, three timer interrupts, a PCA interrupt, a serial port interrupt, and three USB interrupts. This chapter also discusses the interrupt priority scheme, interrupt enable, interrupt processing, and interrupt response time.

Chapter 7, "Universal Serial Bus" — describes the operation of the 8X930A*x* serving as a USB function. The USB function interface manages communications between the USB host and the embedded function. The USB module consists of a serial bus interface engine (SIE), a function interface unit (FIU), a differential transceiver and FIFO data buffers.

Chapter 8, "USB Programming Models" — describes the programming models of the 8X930A*x* USB function interface. This chapter provides flow charts of suggested firmware routines for using the transmit and receive FIFOs to perform data transfers between the host PC and the embedded function and describes how the firmware interacts with the USB module hardware.

Chapter 9, "Input/Output Ports"— describes the four 8-bit I/O ports (ports 0–3) and discusses their configuration for general-purpose I/O. This chapter also discusses external memory accesses (ports 0, 2) and alternative special functions.

Chapter 10, "Timer/Counters and WatchDog Timer" — describes the three on-chip timer/counters and discusses their application. This chapter also provides instructions for using the hardware watchdog timer (WDT) and describes the operation of the WDT during the idle and powerdown modes.

Chapter 11, "Programmable Counter Array" — describes the PCA on-chip peripheral and explains how to configure it for general-purpose applications (timers and counters) and special applications (programmable WDT and pulse-width modulator).

Chapter 12, "Serial I/O Port" — describes the full-duplex serial I/O port and explains how to program it to communicate with external peripherals. This chapter also discusses baud rate generation, framing error detection, multiprocessor communications, and automatic address recognition.

Chapter 13, "Minimum Hardware Setup" — describes the basic requirements for operating the 8X930A*x* in a system. It also discusses on-chip and external clock sources and describes device resets, including power-on reset.

Chapter 14, "Special Operating Modes" — provides an overview of the idle, powerdown, and on-circuit emulation (ONCE) modes and describes how to enter and exit each mode. This chapter also describes the power control (PCON) special function register and lists the status of the device pins during the special modes and reset.

Chapter 15, "External Memory Interface" — describes the external memory signals and bus cycles and provides examples of external memory design. It provides waveform diagrams for the bus cycles, bus cycles with wait states, and the configuration byte bus cycles. It also provides bus cycle diagrams with AC timing symbols and definitions of the symbols.

Chapter 16, "Verifying Nonvolatile Memory" — provides instructions for verifying on-chip program memory, configuration bytes, signature bytes, and lock bits.

Appendix A, "Instruction Set Reference" — provides reference information for the instruction set. It describes each instruction; defines the bits in the program status word registers (PSW, PSW1); shows the relationships between instructions and PSW flags; and lists hexadecimal opcodes, instruction lengths, and execution times.

Appendix B, "Signal Descriptions" — describes the function(s) of each device pin. Descriptions are listed alphabetically by signal name. This appendix also provides a list of the signals grouped by functional category.

Appendix C, "Registers" — accumulates, for convenient reference, copies of the register definition figures that appear throughout the manual.

Appendix D, "Data Flow Model"— describes the data flow model for the 8X930A*x* USB transactions.

Glossary — a glossary of terms has been provided for reference of technical terms.

Index — an index has been included for your convenience.

1.2 NOTATIONAL CONVENTIONS AND TERMINOLOGY

The following notations and terminology are used in this manual. The Glossary defines other terms with special meanings.

#

The pound symbol (#) has either of two meanings, depending on the context. When used with a signal name, the symbol means that the signal is active low. When used with an instruction pneumonic, the symbol prefixes an immediate value in immediate addressing mode.

italics

Italics identify variables and introduce new terminology. The context in which italics are used distinguishes between the two possible meanings.

Variables in registers and signal names are commonly represented by *x* and *y*, where *x* represents the first variable and *y* represents the second variable. For example, in register P*x.y*, *x* represents the variable [1–4] that identifies the specific port, and *y* represents the register bit variable [7:0]. Variables must be replaced with the correct values when configuring or programming registers or identifying signals.

XXXX

Uppercase X (no italics) represents an unknown value or a "don't care" state or condition. The value may be either binary or hexadecimal, depending on the context. For example, 2XAFH (hex) indicates that bits 11:8 are unknown; 10XX in binary context indicates that the two LSBs are unknown.

Assert and Deassert

The terms *assert* and *deassert* refer to the act of making a signal active (enabled) and inactive (disabled), respectively. The active polarity (high/low) is defined by the signal name. Active-low signals are designated by a pound symbol (#) suffix; active-high signals have no suffix. To assert RD# is to drive it low; to assert ALE is to drive it high; to deassert RD# is to drive it high; to deassert ALE is to drive it low.

Instructions

Instruction mnemonics are shown in upper case to avoid confusion. When writing code, either upper case or lower case may be used.

Logic 0 (Low) An input voltage level equal to or less than the maximum value of V_{IL} or an output voltage level equal to or less than the maximum value of V_{OL}. See data sheet for values.

Logic 1 (High) An input voltage level equal to or greater than the minimum value of V_{IH} or an output voltage level equal to or greater than the minimum value of V_{OH}. See data sheet for values.

Numbers Hexadecimal numbers are represented by a string of hexadecimal digits followed by the character *H*. Decimal and binary numbers are represented by their customary notations. That is, 255 is a decimal number and 1111 1111 is a binary number. In some cases, the letter *B* is added for clarity.

Register Bits Bit locations are indexed by 7:0 for byte registers, 15:0 for word registers, and 31:0 for double-word (dword) registers, where bit 0 is the least-significant bit and 7, 15, or 31 is the most-significant bit. An individual bit is represented by the register name, followed by a period and the bit number. For example, PCON.4 is bit 4 of the power control register. In some discussions, bit names are used. For example, the name of PCON.4 is POF, the power-off flag.

Register Names Register names are shown in upper case. For example, PCON is the power control register. If a register name contains a lowercase character, it represents more than one register. For example, CCAPM*x* represents the five registers: CCAPM0 through CCAPM4.

Reserved Bits Some registers contain reserved bits. These bits are not used in this device, but they may be used in future implementations. Do not write a "1" to a reserved bit. The value read from a reserved bit is indeterminate.

Set and Clear The terms *set* and *clear* refer to the value of a bit or the act of giving it a value. If a bit is *set*, its value is "1"; *setting* a bit gives it a "1" value. If a bit is *clear*, its value is "0"; *clearing* a bit gives it a "0" value.

Signal Names Signal names are shown in upper case. When several signals share a common name, an individual signal is represented by the signal name followed by a number. Port pins are represented by the port abbreviation, a period, and the pin number (e.g., P0.0, P0.1). A pound symbol (#) appended to a signal name identifies an active-low signal.

Units of Measure The following abbreviations are used to represent units of measure:

A	amps, amperes
DCV	direct current volts
Kbyte	kilobytes
KΩ	kilo-ohms
mA	milliamps, milliamperes
Mbyte	megabytes
MHz	megahertz
ms	milliseconds
mW	milliwatts
ns	nanoseconds
pF	picofarads
W	watts
V	volts
µA	microamps, microamperes
µF	microfarads
µs	microseconds
µW	microwatts

1.3 RELATED DOCUMENTS

The following documents contain additional information that is useful in designing systems that incorporate the 8X930A*x*. To order documents, please call Intel Literature Fulfillment (1-800-548-4725 in the U.S. and Canada; +44(0) 793-431155 in Europe).

Embedded Microcontrollers	Order Number 270646
Embedded Processors	Order Number 272396
Embedded Applications	Order Number 270648
Packaging	Order Number 240800
Universal Serial Bus Specification	Order Number 272904

1.3.1 Data Sheet

The data sheet is included in *Embedded Microcontrollers* and is also available individually.

8X930A*x* *Universal Serial Bus Microcontroller*	Order Number 272917

1.3.2 Application Notes

The following MCS 251 application notes apply to the 8X930A*x*.

AP-125, Designing Microcontroller Systems for Electrically Noisy Environments	Order Number 210313
AP-155, Oscillators for Microcontrollers	*Order Number* 230659
AP-708, Introducing the MCS® 251 Microcontroller —the 8XC251SB	Order Number 272670
AP-709, *Maximizing Performance Using MCS® 251 Microcontroller —Programming the 8XC251SB*	Order Number 272671
AP-710, Migrating from the MCS® 51 Microcontroller to the MCS 251 Microcontroller (8XC251SB)—Software and Hardware Considerations	Order Number 272672

The following MCS 51 microcontroller application notes also apply to the 8X930A*x*.

AP70, Using the Intel MCS® 51 Boolean Processing Capabilities	Order Number 203830
AP-223, 8051 Based CRT Terminal Controller	Order Number 270032
AP-252, Designing With the 80C51BH	Order Number 270068
AP-425, Small DC Motor Control	Order Number 270622
AP-410, Enhanced Serial Port on the 83C51FA	Order Number 270490
AP-415, 83C51FA/FB PCA Cookbook	Order Number 270609
AP-476, How to Implement I^2C Serial Communication Using Intel MCS® 51 Microcontrollers	Order Number 272319

1.4 APPLICATION SUPPORT SERVICES

You can get up-to-date technical information from a variety of electronic support systems: the World Wide Web, CompuServe, the FaxBack* service, and Intel's Brand Products and Applications Support bulletin board service (BBS). These systems are available 24 hours a day, 7 days a week, providing technical information whenever you need it.

In the U.S. and Canada, technical support representatives are available to answer your questions between 5 a.m. and 5 p.m. Pacific Standard Time (PST). Outside the U.S. and Canada, please contact your local distributor. You can order product literature from Intel literature centers and sales offices.

Table 1-1 lists the information you need to access these services.

Table 1-1. Intel Application Support Services

Service	U.S. and Canada	Asia-Pacific and Japan	Europe
World Wide Web	URL: http://www.intel.com/	URL: http://www.intel.com/	URL: http://www.intel.com/
CompuServe	go intel	go intel	go intel
FaxBack*	800-525-3019	503-264-6835 916-356-3105	+44(0)1793-496646
BBS	503-264-7999 916-356-3600	503-264-7999 916-356-3600	+44(0)1793-432955
Help Desk	800-628-8686 916-356-7999	Please contact your local distributor.	Please contact your local distributor.
Literature	800-548-4725	708-296-9333 +81(0)120 47 88 32	+44(0)1793-431155 England +44(0)1793-421777 France +44(0)1793-421333 Germany

1.4.1 World Wide Web

We offer a variety of technical and product information through the World Wide Web (URL: http://www.intel.com/design/mcs96). Also visit Intel's Web site for financials, history, and news.

1.4.2 CompuServe Forums

Intel maintains several CompuServe forums that provide a means for you to gather information, share discoveries, and debate issues. Type "go intel" for access. The INTELC forum is set up to support designers using various Intel components. For information about CompuServe access and service fees, call CompuServe at 1-800-848-8199 (U.S.) or 614-529-1340 (outside the U.S.).

1.4.3 FaxBack Service

The FaxBack service is an on-demand publishing system that sends documents to your fax machine. You can get product announcements, change notifications, product literature, device characteristics, design recommendations, and quality and reliability information from FaxBack 24 hours a day, 7 days a week.

Think of the FaxBack service as a library of technical documents that you can access with your phone. Just dial the telephone number and respond to the system prompts. After you select a document, the system sends a copy to your fax machine.

Each document is assigned an order number and is listed in a subject catalog. The first time you use FaxBack, you should order the appropriate subject catalogs to get a complete listing of document order numbers. Catalogs are updated twice monthly. In addition, daily update catalogs list the title, status, and order number of each document that has been added, revised, or deleted during the past eight weeks. The daily update catalogs are numbered with the subject catalog number followed by a zero. For example, for the complete microcontroller and flash catalog, request document number 2; for the daily update to the microcontroller and flash catalog, request document number 20.

The following catalogs and information are available at the time of publication:

1. *Solutions OEM* subscription form
2. Microcontroller and flash catalog
3. Development tools catalog
4. Systems catalog
5. Multimedia catalog
6. Multibus and iRMX® software catalog and BBS file listings
7. Microprocessor, PCI, and peripheral catalog
8. Quality and reliability and change notification catalog
9. iAL (Intel Architecture Labs) technology catalog

1.4.4 Bulletin Board System (BBS)

Intel's Brand Products and Applications Support bulletin board system (BBS) lets you download files to your PC. The BBS has the latest *Ap*BUILDER software, hypertext manuals and datasheets, software drivers, firmware upgrades, application notes and utilities, and quality and reliability data.

Any customer with a PC and modem can access the BBS. The system provides automatic configuration support for 1200- through 19200-baud modems. Use these modem settings: no parity, 8 data bits, and 1 stop bit (N, 8, 1).

To access the BBS, just dial the telephone number (see Table 1-1 on page 1-7) and respond to the system prompts. During your first session, the system asks you to register with the system operator by entering your name and location. The system operator will set up your access account within 24 hours. At that time, you can access the files on the BBS.

NOTE

In the U.S. and Canada, you can get a BBS user's guide, a master list of BBS files, and lists of FaxBack documents by calling 1-800-525-3019. Use these modem settings: no parity, 8 data bits, and 1 stop bit (N, 8, 1).

2

Introduction

CHAPTER 2
INTRODUCTION

The 8X930A*x* is a peripheral interface chip for Universal Serial Bus (USB) applications. It supports the connection of a PC peripheral, such as a keyboard or a modem, to a host PC via the USB. The USB is specified by the *Universal Serial Bus Specification*. Much of the material in this document rests on this USB specification.

In the language of the USB specification, the 8X930A*x* is a *USB device*. A USB device can serve as a *function* by providing an interface for a peripheral, and it can serve as a *hub* by providing additional connections to the USB. The 8X930A*x* described in this manual serves as a USB function. Figure 2-1 depicts the 8X930A*x* in a USB system.

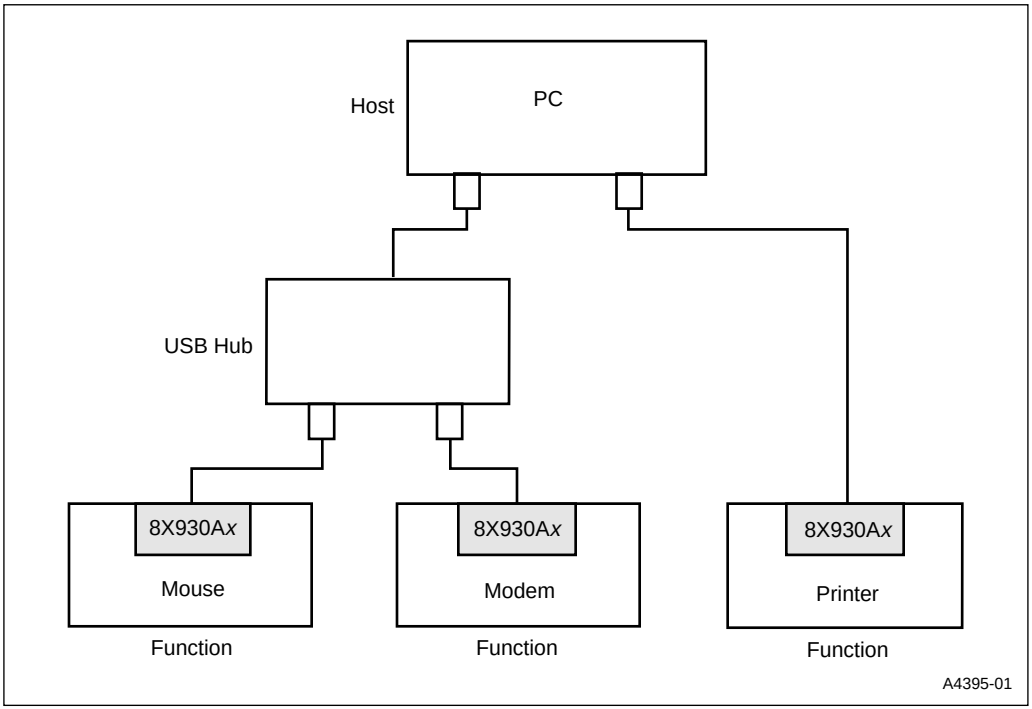

Figure 2-1. 8X930A*x* in a Universal Serial Bus System

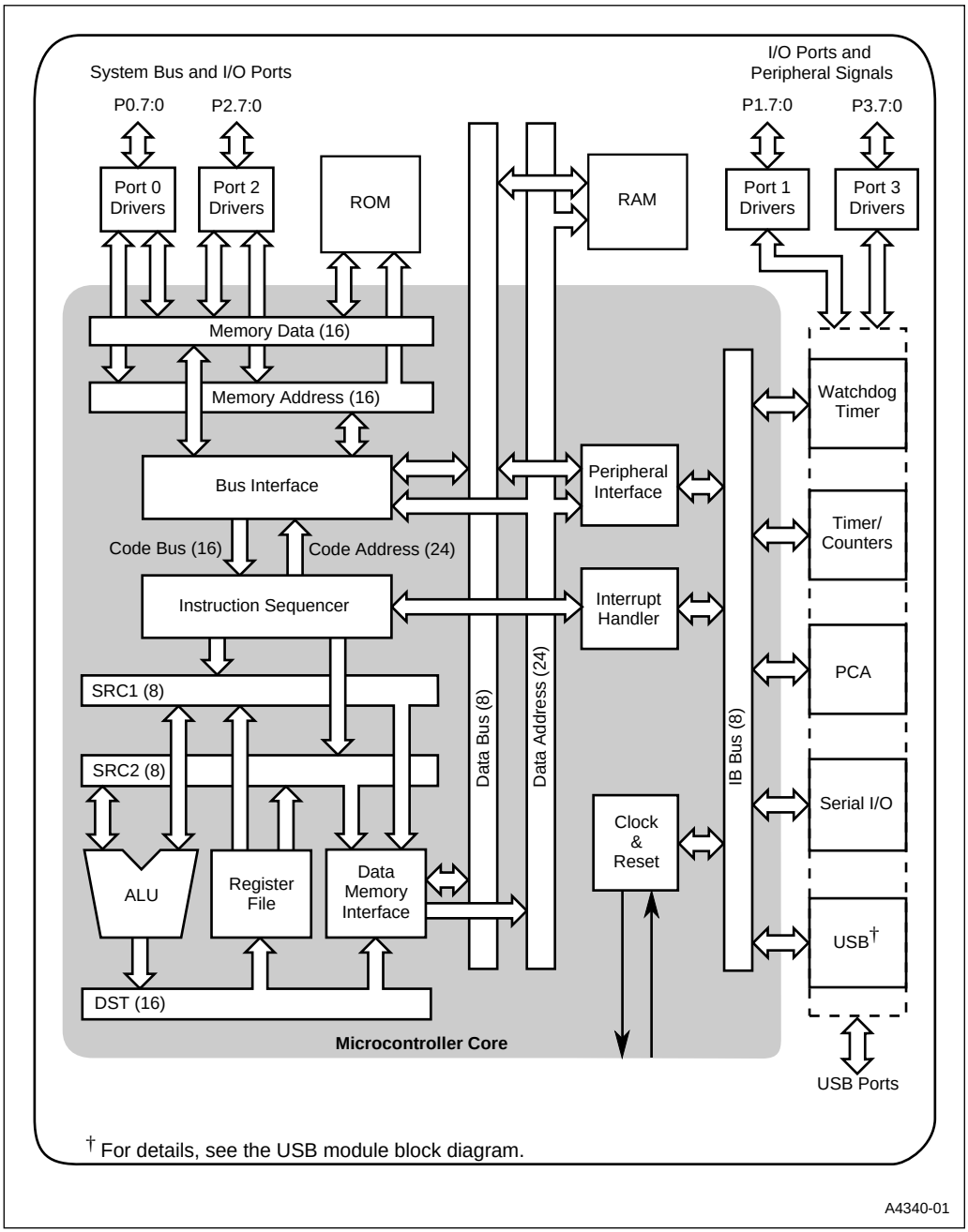

Figure 2-2. Functional Block Diagram of the 8X930A*x*

2.1 PRODUCT OVERVIEW

The 8X930A*x* can be briefly described as an MCS® 251 microcontroller with an on-chip USB module, and additional pinouts provided for USB operations. As shown in the functional block diagram (Figure 2-2), the 8X930A*x* consists of a microcontroller core, on-chip ROM (optional) and RAM, I/O ports, the on-chip USB module, and on-chip peripherals.

The microcontroller core together with the USB module provide the capabilities of a USB device. The block diagram in Figure 2-3 shows the main components of the USB module and how they interface with the CPU. The other microcontroller peripherals are not essential to operation as a USB device.

The 8X930A*x* uses the standard instruction set of the MCS 251 architecture.

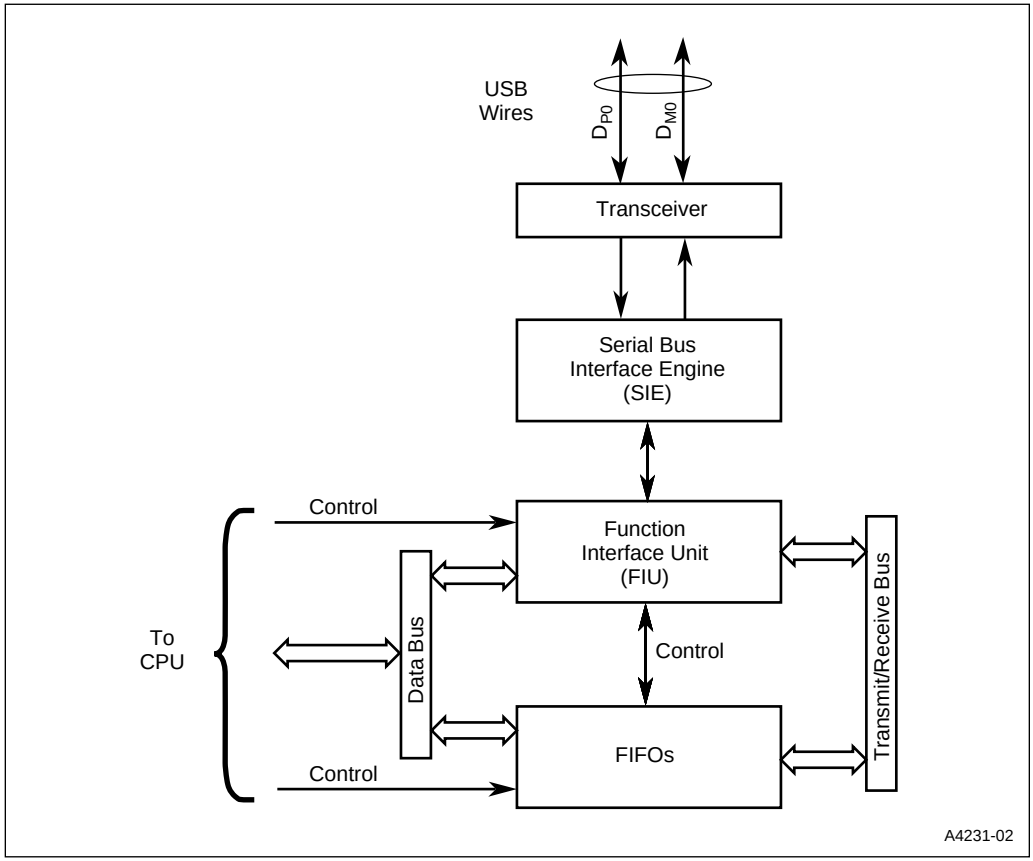

Figure 2-3. 8X930A*x* USB Module Block Diagram

2.1.1 8X930A*x* Features

The major features of the 8X930A*x* are listed below and summarized in Table 2-1. The 8X930A*x* is derived from the 8XC251S*x* microcontroller which provides the following features:

- 256 Kbytes of external memory addressability
- On-chip RAM (512 or 1024 bytes)
- On-chip ROM (0, 8 or 16 Kbyte**s)**
- Four 8-bit I/O ports: one open drain port, three quasi-bidirectional ports
- Code compatibility with MCS® 51 microcontrollers
- On-chip peripherals:
  - — Serial I/O port: standard MCS 51 microcontroller Universal Asynchronous Receiver Transmitter (UART)
  - — Programmable counter array (PCA): 5 capture/compare modules configurable for timing, counting, or PWM
  - — Three general-purpose timer/counters
  - — Dedicated 14-bit hardware watchdog timer

In addition, the 8X930A*x* has an on-chip USB module which provides the USB capability. The major features of the USB module include:

- Standard universal serial bus interface
- Four USB function endpoints.
- Three pairs of 16-byte transmit/receive FIFO data buffers for endpoints 0, 2, 3.
- One pair of configurable transmit/receive FIFO data buffers for endpoint 1. (Sizes: 256/256, 512/512, 0/1024, or 1024/0 bytes)
- Phase-locked loop (1.5 Mbps and 12 Mbps USB data rates)

You can configure the 8X930A*x* to specify *binary mode* or *source mode* as the opcode arrangement. Either mode executes all of the MCS 51 architecture instructions and all of the MCS 251 architecture instructions. However, source mode is more efficient for MCS 251 architecture instructions, and binary mode is more efficient for MCS 51 architecture instructions. In binary mode, object code for an MCS 51 microcontroller runs on the 8X930A*x* without recompiling. For details see "Opcode Configurations (SRC)" on page 4-12.

Certain instructions operate on 8-, 16-, or 32-bit operands, providing easier and more efficient programming in high-level languages such as C. Additional features include the TRAP instruction, a displacement addressing mode, and several conditional jump instructions. Chapter 5, "Instructions and Addressing," describes the instruction set and compares it with the instruction set for MCS 51 microcontrollers.

Table 2-1. 8X930A*x* Features Summary

Device Number	On-chip Memory	
	ROM (Kbytes)	RAM (Bytes)
80930AA	0	512
83930AA	8	512
83930AB	16	512
80930AD	0	1024
83930AD	8	1024
83930AE	16	1024
General features: Address space 256 Kbytes External bus (multiplexed) Address 16, 17, or 18 bits Data 8 bits Register file 40 bytes Interrupt sources 11 I/O ports Four 8-bit I/O ports On-chip Peripherals: Serial I/O port Programmable counter array (5 modules) Three general-purpose timer/counters Hardware WDT.		
USB features: Standard Universal Serial Bus Interface 4 function endpoints – one pair of configurable transmit/receive FIFOs (up to 1023 bytes total) and three 16 byte transmit/receive FIFO pairs On-chip clock/PLL USB rates 1.5 and 12 Mbps		

MCS 251 microcontrollers store both code and data in a single, linear 16-Mbyte memory space. The usable memory space of the 8X930A*x* consists of four 64-Kbyte regions (256 Kbytes). The external bus provides up to 256 Kbytes of external memory addressability. The special function registers (SFRs) and the register file have separate address spaces. Refer to Chapter 3, “Memory Partitions” for a description of the address modes.

Each pin of the four 8-bit I/O ports can be individually programmed as a general I/O signal or as a special-function signal that supports the external bus or one of the on-chip peripherals. Ports P0 and P2 comprise a 16-line external bus, which transmits a 16-bit address multiplexed with 8 data bits. (You can also configure the 8X930A*x* to have a 17-bit or an 18-bit external address bus. Refer to “Configuring the External Memory Interface” on page 4-7.) Ports P1 and P3 carry bus-control and peripheral signals.

The 8X930A*x* has two power-saving modes. In idle mode, the CPU clock is stopped, while clocks to the peripherals continue to run. In global suspend mode (powerdown), the on-chip oscillator is stopped, and the chip enters a static state. An enabled interrupt or a hardware reset can bring the chip back to its normal operating mode from idle or powerdown. Refer to Chapter 14, "Special Operating Modes," for details on the power-saving modes.

2.2 MCS 251 MICROCONTROLLER CORE

The MCS 251 microcontroller core contains the CPU, the clock and reset unit, the interrupt handler, the bus interface, and the peripheral interface. The CPU contains the instruction sequencer, ALU, register file, and data memory interface.

2.2.1 CPU

Figure 2-4 is a functional block diagram of the CPU (central processor unit). The 8X930A*x* fetches instructions from on-chip code memory two bytes at a time, or from external memory in single bytes. The instructions are sent over the 16-bit code bus to the execution unit. You can configure the 8X930A*x* to operate in *page mode* for accelerated instruction fetches from external memory. In page mode, if an instruction fetch is to the same 256-byte "page" as the previous fetch, the fetch requires one state (two clocks) rather than two states (four clocks).

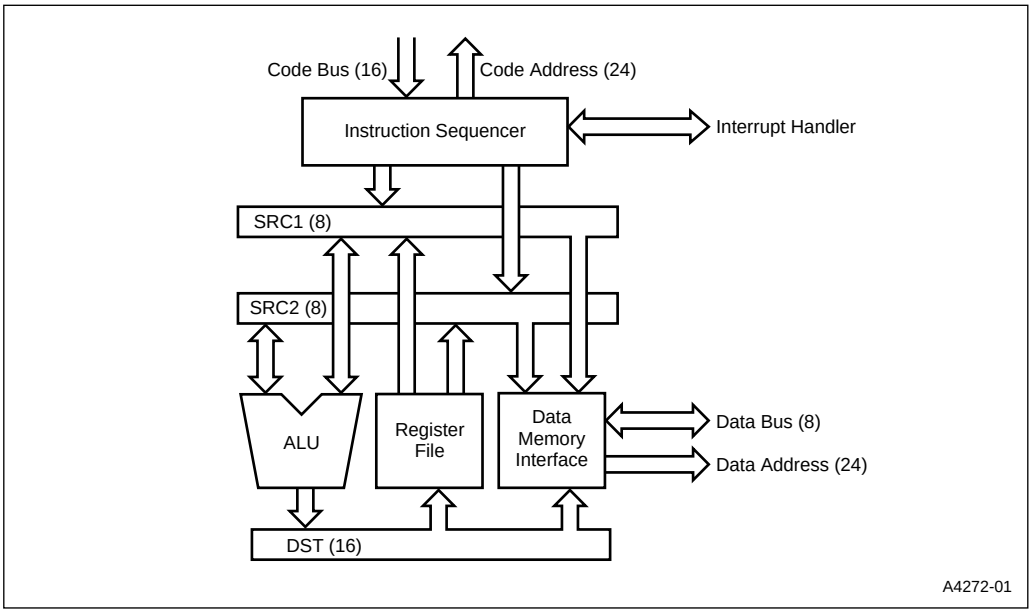

Figure 2-4. The CPU

The 8X930A*x* register file has forty registers, which can be accessed as bytes, words, and double words. As in the MCS 51 architecture, registers 0–7 consist of four banks of eight registers each, where the active bank is selected by the program status word (PSW) for fast context switches.

The 8X930A*x* is a single-pipeline machine. When the pipeline is full and code is executing from on-chip code memory, an instruction is completed every state time. When the pipeline is full and code is executing from external memory (with no wait states and no extension of the ALE signal), an instruction is completed every two state times.

2.2.2 Clock and Reset Unit

The timing signal for the 8X930A*x* can be provided by:

- an external frequency source connected to $XTAL_1$
- an on-chip oscillator employing an external crystal/resonator connected across $XTAL_1$ and $XTAL_2$.
- an on-chip oscillator phase-locked to one of the above sources.

Device pins PLLSEL2:0 select the operating rate of the USB module and turn the PLL on and off. Table 2-2 lists the USB operating rates and crystal frequencies as a function of the phase-locked loop select code. “Clock Sources” on page 13-2 discusses the requirements for external-clock signals and on-chip oscillators.

The basic unit of time for 8X930A*x* microcontrollers is the *state time* (or *state*). States are divided into two phases identified as *phase 1* and *phase 2*. See Figures 2-5 and 2-6. The 8X930A*x* peripherals operate on a *peripheral cycle*, which is six state times. A specific time within a peripheral cycle is denoted by its state and phase. For example, the PCA timer is incremented once each peripheral cycle in phase 2 of state 5 (denoted as S5P2).

When the PLL is on, the frequency of the internal clock distributed to the CPU and peripherals is twice as great as for the case of PLL off (at F_{OSC} = 12 MHz).

As shown in Table 2-2 and Figure 2-5, when the PLL is off (PLLSEL2:0 = 001 or 100), there are 2 T_{OSC}/state. As shown in Table 2-2 and Figure 2-6, when the PLL is on (PLLSEL2:0 = 110), there is 1 T_{OSC}/state.

The reset unit places the 8X930A*x* into a known state. A chip reset is initiated by asserting the RST pin, by a USB initiated reset, or by allowing the watchdog timer to time out (refer to Chapter 13, “Minimum Hardware Setup”).

Table 2-2. 8X930A*x* Operating Frequency

PLLSEL2 Pin 43 (1)	PLLSEL1 Pin 42 (1)	PLLSEL0 Pin 44 (1)	USB Rate (2)	Internal Frequency for CPU and Peripherals ($1/T_{CLK}$) (3)	XTAL1 Frequency F_{osc}	XTAL1 Clocks per State T_{osc}/State (5)	Comments
0	0	1	1.5 Mbps (Low Speed)	3 Mhz	6 Mhz	2	PLL Off
1	0	0	1.5 Mbps (Low Speed)	6 Mhz (4)	12 Mhz	2	PLL Off
1	1	0	12 Mbps (Full Speed)	12 Mhz (4)	12 Mhz	1	PLL On

NOTES:
1. Other PLLSEL*x* combinations are not valid.
2. The sampling rate is 4X the USB rate.
3. The 8X930A*x* datasheet AC timing specification defines the following symbols: CPU frequency = F_{CLK} = $1/T_{CLK}$.
4. The 8X930A*x* CPU and peripherals frequency is 3 Mhz (low clock mode) until the LC bit in PCON is cleared.
5. The number of XTAL1 clocks per state (T_{osc}/state) depends on the PLLSEL2:0 selection. When the CPU is operating in low clock mode (3 MHz), there are four T_{osc}/state for PLLSEL2:0 = 100 or 110.

2.2.3 Interrupt Handler

The interrupt handler can receive interrupt requests from eleven maskable sources and the TRAP instruction. When the interrupt handler grants an interrupt request, the CPU discontinues the normal flow of instructions and branches to a routine that services the source that requested the interrupt. You can enable or disable the interrupts individually (except for TRAP) and you can assign one of four priority levels to each interrupt. Refer to Chapter 6, "Interrupt System," for a detailed description.

2.3 ON-CHIP MEMORY

For ROM devices, the 8X930A*x* provides on-chip program memory beginning at location FF:0000H. See Table 2-1 for memory options. Following a reset, the first instruction is fetched from location FF:0000H. For devices without ROM, instruction fetches are always from external memory.

The 8X930A*x* provides on-chip data RAM beginning at location 00:0020H (i.e., just above the four banks of registers R0–R7 which occupy the first 32 bytes of the memory space). See Table 2-1 for memory options. Data RAM locations can be accessed with direct, indirect, and displacement addressing. Ninety-six of these locations (20H–7FH) are bit addressable.

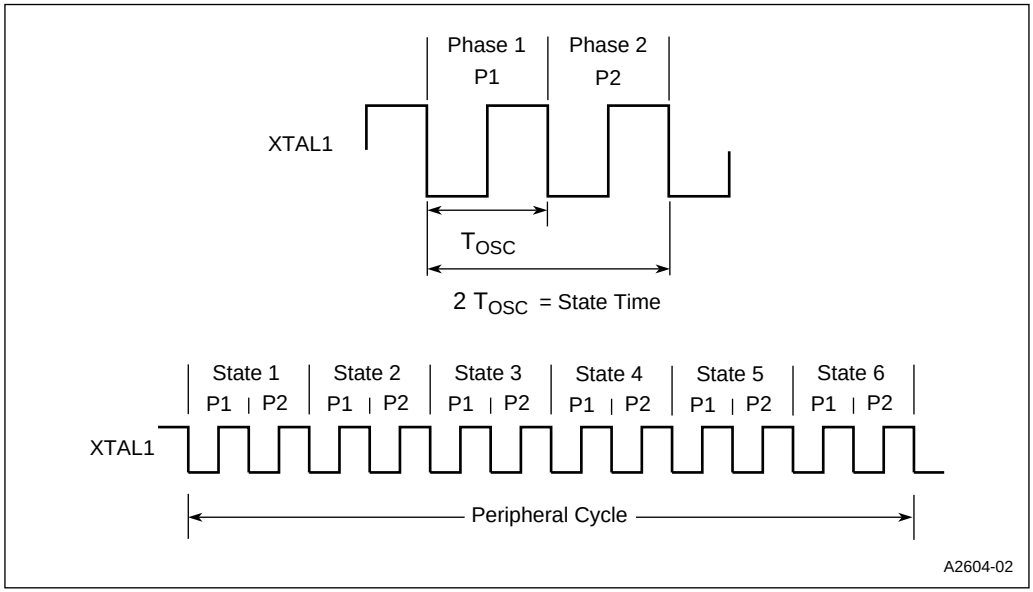

Figure 2-5. Clocking Definitions (PLL off) †

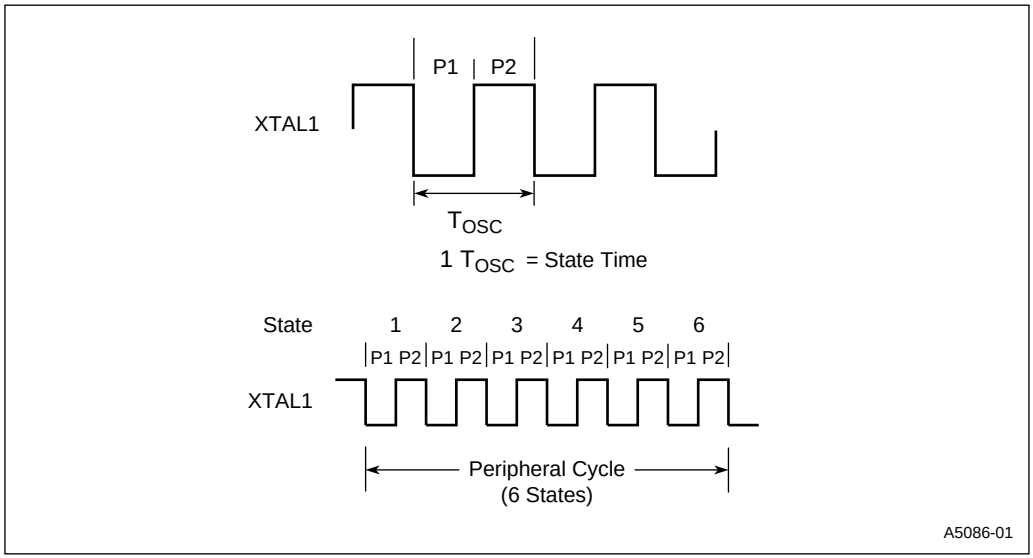

Figure 2-6. Clocking Definitions (PLL on) ††

† Figure 2-5 shows timing for PLL off (PLLSEL2:0 = 001 or 100) and 8X930A*x* not in low-clock mode. 2 T_{OSC}./State.
†† Figure 2-6 shows timing for PLL on (PLLSEL2:0 = 110) and 8X930A*x* not in low-clock mode. 1 T_{OSC}./State.

2.4 UNIVERSAL SERIAL BUS MODULE

The universal serial bus module provides a USB interface between the host PC and the product in which the 8X930A*x* is embedded. Data port 0 (D_{P0}, D_{M0}) provides the upstream connection. Figure 2-3 shows the main components of the USB module.

The serial interface engine (SIE) handles the communication protocol of universal serial bus. The function interface unit (FIU) manages data received and transmitted by the USB module. The 8X930A*x* supports four function endpoints. Each endpoint contains a transmit FIFO and a receive FIFO. See Table 2-1. Transmit FIFOs are written by the CPU, then read by the FIU for transmission. Receive FIFOs are written by the FIU following reception, then read by the CPU. All transmit FIFOs have the same architecture, and all receive FIFOs have the same architecture.

Operation of the USB module is described in detail in Chapter 7, "Universal Serial Bus," and Chapter 8, "USB Programming Models."

2.5 ON-CHIP PERIPHERALS

The on-chip peripherals, which reside outside the microcontroller core, perform specialized functions. Software accesses the peripherals via their special function registers (SFRs). The 8X930A*x* has four peripherals: the watchdog timer, the timer/counters, the programmable counter array (PCA), and the serial I/O port.

2.5.1 Timer/Counters and Watchdog Timer

The timer/counter unit has three timer/counters, which can be clocked by the oscillator (for timer operation) or by an external input (for counter operation). You can set up an 8-bit, 13-bit, or 16-bit timer/counter, and you can program them for special applications, such as capturing the time of an event on an external pin, outputting a programmable clock signal on an external pin, or generating a baud rate for the serial I/O port. Timer/counter events can generate interrupt requests.

The watchdog timer is a circuit that automatically resets the 8X930A*x* in the event of a hardware or software upset. When enabled by software, the watchdog timer begins running, and unless software intervenes, the timer reaches a maximum count and initiates a chip reset. In normal operation, software periodically clears the timer register to prevent the reset. If an upset occurs and software fails to clear the timer, the resulting chip reset disables the timer and returns the system to a known state. The watchdog and the timer/counters are described in Chapter 10, "Timer/Counters and WatchDog Timer."

2.5.2 Programmable Counter Array (PCA)

The programmable counter array (PCA) has its own timer and five capture/compare modules that perform several functions: capturing (storing) the timer value in response to a transition on an input pin; generating an interrupt request when the timer matches a stored value; toggling an output pin when the timer matches a stored value; generating a programmable PWM (pulse width modulator) signal on an output pin; and serving as a software watchdog timer. Chapter 11, "Programmable Counter Array," describes this peripheral in detail.

2.5.3 Serial I/O Port

The serial I/O port provides one synchronous and three asynchronous communication modes. The synchronous mode (mode 0) is half-duplex: the serial port outputs a clock signal on one pin and transmits or receives data on another pin.

The asynchronous modes (modes 1–3) are full-duplex (i.e., the port can send and receive simultaneously). Mode 1 uses a serial frame of 10 bits: a start bit, 8 data bits, and a stop bit. The baud rate is generated by overflow of timer 1 or timer 2. Modes 2 and 3 use a serial frame of 11 bits: a start bit, eight data bits, a programmable ninth data bit, and a stop bit. The ninth bit can be used for parity checking or to specify that the frame contains an address and data. In mode 2, you can use a baud rate of 1/32 or 1/64 of the oscillator frequency. In mode 3, you can use the overflow from timer 1 or timer 2 to determine the baud rate.

In its synchronous modes (modes 1–3) the serial port can operate as a slave in an environment where multiple slaves share a single serial line. It can accept a message intended for itself or a message that is being broadcast to all of the slaves, and it can ignore a message sent to another slave.

2.6 OPERATING CONDITIONS

The 8X930A*x* is designed for a commercial operating environment and to accommodate the operating rates of the USB interface. For detailed specifications, refer to the current 8X930A*x* Universal Serial Bus Microcontroller datasheet. For USB module operating rates see “Clock and Reset Unit” on page 2-7.

3

Memory Partitions

CHAPTER 3
MEMORY PARTITIONS

The 8X930A*x* has three address spaces: a memory space, a special function register (SFR) space, and a register file. This chapter describes these address spaces as they apply to the 8X930A*x*. It also discusses the compatibility of the MCS® 251 architecture and the MCS® 51 architecture in terms of their address spaces.

3.1 ADDRESS SPACES FOR 8X930A*x*

Figure 3-1 shows the memory space, the SFR space, and the register file for 8X930A*x*. (The address spaces are depicted as being eight bytes wide with addresses increasing from left to right and from bottom to top.)

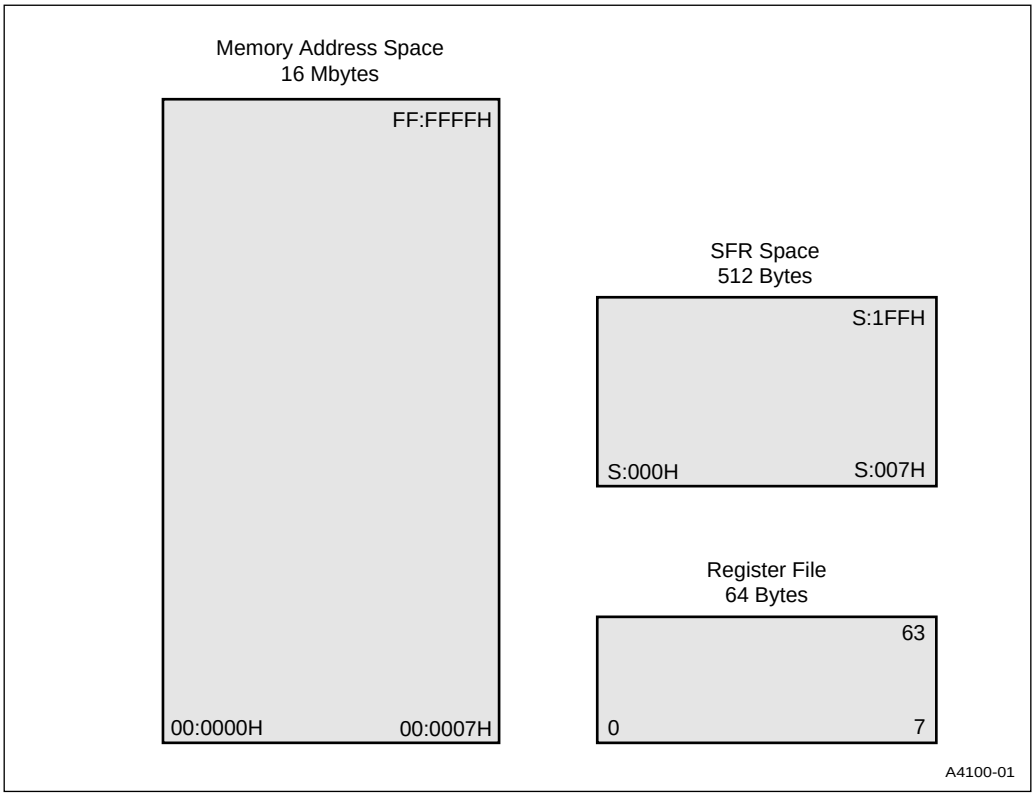

Figure 3-1. Address Spaces for the 8X930A*x*

It is convenient to view the unsegmented, 16-Mbyte memory space as consisting of 256 64-Kbyte regions, numbered 00: to FF:.

NOTE

The memory space in the 8X930A*x* is unsegmented. The 64-Kbyte "regions" 00:, 01:, ..., FF: are introduced only as a convenience for discussions. Addressing in the 8X930A*x* is linear; there are **no** segment registers.

On-chip RAM is located at the bottom of the memory space, beginning at location 00:0000H. The first 32 bytes (00:0000H–00:001FH) provide storage for a part of the register file. The on-chip, general-purpose data RAM resides just above this, beginning at location 00:0020H.

On-chip ROM (code memory) is located in the top region of the memory space, beginning at location FF:0000H. Following device reset, execution begins at this address. The top eight bytes of region FF: are reserved for the configuration array.

The register file has its own address space (Figure 3-1). The 64 locations in the register file are numbered decimally from 0 to 63. Locations 0–7 represent one of four switchable register banks, each having eight registers. The 32 bytes required for these banks occupy locations 00:0000H–00:001FH in the memory space. Register file locations 8–63 do not appear in the memory space. See "8X930Ax Register File" on page 3-9 for a further description of the register file.

The SFR space accommodates up to 512 8-bit special function registers with addresses S:000H–S:1FFH. SFRs implemented in the 8X930A*x* are shown in Table 3-6 on page 3-10. In the MCS 251 architecture, use the prefix "S:" with SFR addresses to distinguish them from the memory space addresses 00:0000H–00:01FFH. See "Special Function Registers (SFRs)" on page 3-15 for details on the SFR space.

3.1.1 Compatibility with the MCS® 51 Architecture

The address spaces in the MCS 51 architecture† are mapped into the address spaces in the MCS 251 architecture. This mapping allows code written for MCS 51 microcontrollers to run on MCS 251 microcontrollers. (Chapter 5, "Instructions and Addressing" discusses the compatibility of the two instruction sets.)

Figure 3-2 shows the address spaces for the MCS 51 architecture. Internal data memory locations 00H–7FH can be addressed directly and indirectly. Internal data locations 80H–FFH can only be addressed indirectly. Directly addressing these locations accesses the SFRs. The 64-Kbyte code memory has a separate memory space. Data in the code memory can be accessed only with the MOVC instruction. Similarly, the 64-Kbyte external data memory can be accessed only with the MOVX instruction.

The register file (registers R0–R7) comprises four switchable register banks, each having eight registers. The 32 bytes required for the four banks occupy locations 00H–1FH in the on-chip data memory.

Figure 3-3 shows how the address spaces in the MCS 51 architecture map into the address spaces in the MCS 251 architecture; details are listed in Table 3-1.

† *MCS®51 Microcontroller Family User's Manual* (Order Number: 272383)

The 64-Kbyte code memory for MCS 51 microcontrollers maps into region FF: of the memory space for MCS 251 microcontrollers. Assemblers for MCS 251 microcontrollers assemble code for MCS 51 microcontrollers into region FF:, and data accesses to code memory are directed to this region. The assembler also maps the interrupt vectors to region FF:. This mapping is transparent to the user; code executes just as before, without modification.

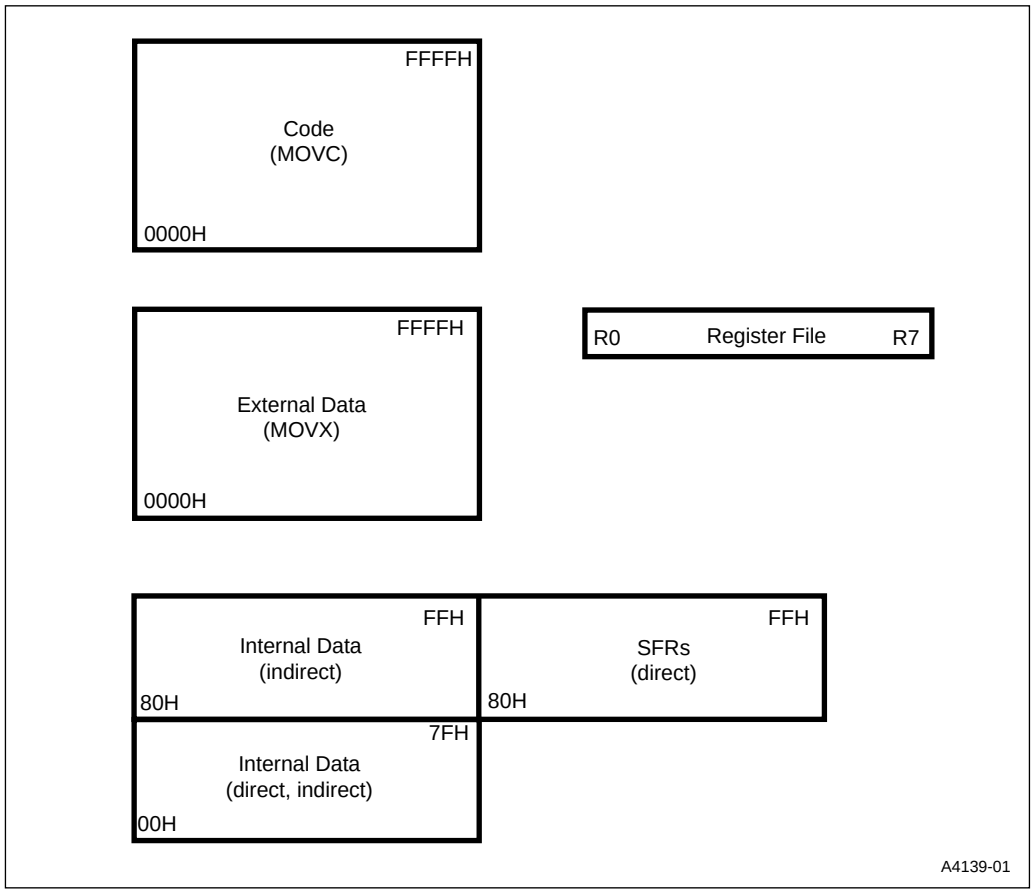

Figure 3-2. Address Spaces for the MCS® 51 Architecture

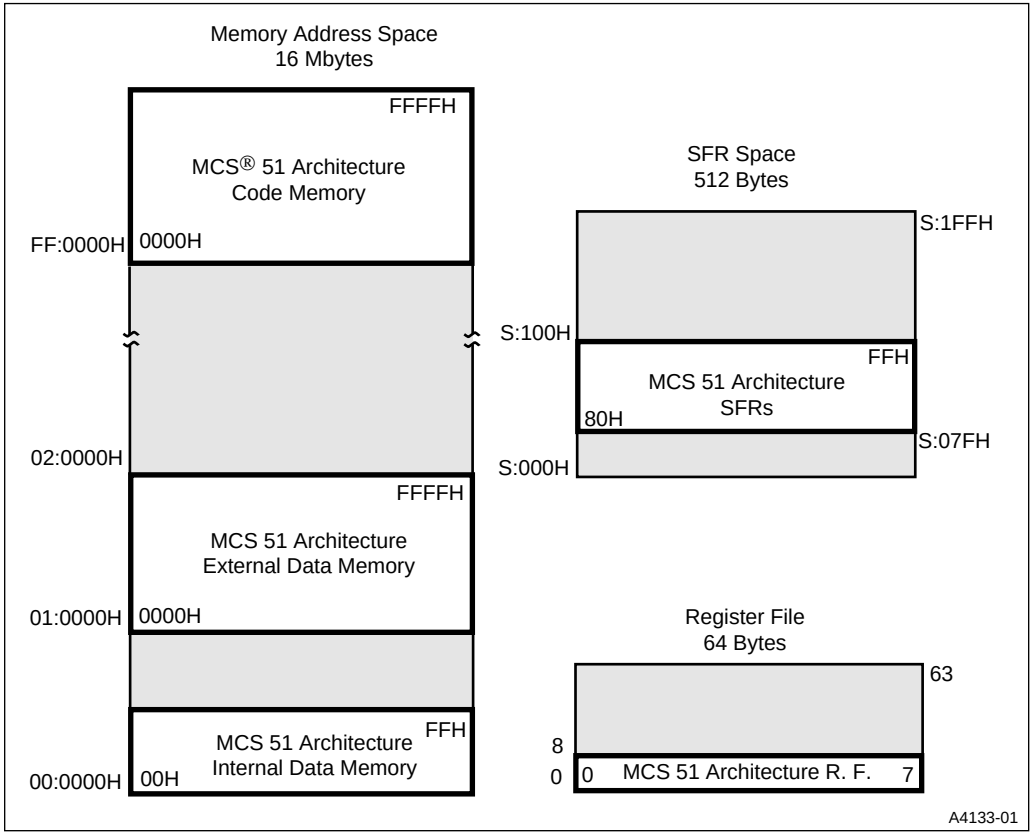

Figure 3-3. Address Space Mappings MCS® 51 Architecture to MCS® 251 Architecture

Table 3-1. Address Mappings

Memory Type	MCS® 51 Architecture			MCS® 251 Architecture
	Size	Location	Data Addressing	Location
Code	64 Kbytes	0000H–FFFFH	Indirect using MOVC instr.	FF:0000H–FF:FFFFH
External Data	64 Kbytes	0000H–FFFFH	Indirect using MOVX instr.	01:0000H–01:FFFFH
Internal Data	128 bytes	00H–7FH	Direct, Indirect	00:0000H–00:007FH
	128 bytes	80H–FFH	Indirect	00:0080H–00:00FFH
SFRs	128 bytes	S:80H–S:FFH	Direct	S:080H–S:0FFH
Register File	8 bytes	R0–R7	Register	R0–R7

The 64-Kbyte external data memory for MCS 51 microcontrollers is mapped into the memory region specified by bits 16–23 of the data pointer DPX, i.e., DPXL. DPXL is accessible as register file location 57 and also as the SFR at S:084H (see “Dedicated Registers” on page 3-12). The reset value of DPXL is 01H, which maps the external memory to region 01: as shown in Figure 3-3. You can change this mapping by writing a different value to DPXL. A mapping of the MCS 51 microcontroller external data memory into any 64-Kbyte memory region in the MCS 251 architecture provides complete run-time compatibility because the lower 16 address bits are identical in the two address spaces.

The 256 bytes of on-chip data memory for MCS 51 microcontrollers (00H-FFH) are mapped to addresses 00:0000H-00:00FFH to ensure complete run-time compatibility. In the MCS 51 architecture, the lower 128 bytes (00H-7FH) are directly and indirectly addressable; however the upper 128 bytes are accessible by indirect addressing only. In the MCS 251 architecture, all locations in region 00: are accessible by direct, indirect, and displacement addressing (see “8X930Ax Memory Space” on page 3-5).

The 128-byte SFR space for MCS 51 microcontrollers is mapped into the 512-byte SFR space of the MCS 251 architecture starting at address S:080H, as shown in Figure 3-3. This provides complete compatibility with direct addressing of MCS 51 microcontroller SFRs (including bit addressing). The SFR addresses are unchanged in the new architecture. In the MCS 251 architecture, SFRs A, B, DPL, DPH, and SP (as well as the new SFRs DPXL and SPH) reside in the register file for high performance. However, to maintain compatibility, they are also mapped into the SFR space at the same addresses as in the MCS 51 architecture.

3.2 8X930A*x* MEMORY SPACE

Figure 3-4 shows the logical memory space for the 8X930A*x* microcontroller. The usable memory space of the 8X930A*x* consists of four 64-Kbyte regions: 00:, 01:, FE:, and FF:. Code can execute from all four regions; code execution begins at FF:0000H. Regions 02:-FD are reserved. Reading a location in the reserved area returns an unspecified value. Software can execute a write to the reserved area, but nothing is actually written.

All four regions of the memory space are available at the same time. The maximum number of external address lines is 18, which limits external memory to a maximum of four regions (256 Kbytes). See “Configuring the External Memory Interface” on page 4-7, and “External Memory Design Examples” on page 15-17.

Locations FF:FFF8H–FF:FFFFH are reserved for the configuration array (see Chapter 4, “Device Configuration”). The two configuration bytes for the 8X930A*x* are accessed at locations FF:FFF8H and FF:FFF9H; locations FF:FFFAH–FF:FFFFH are reserved for configuration bytes in future products. Do not attempt to execute code from locations FF:FFF8H–FF:FFFFH. Also, see the caution on page 4-3 regarding execution of code from locations immediately below the configuration array.

Figure 3-4 also indicates the addressing modes that can be used to access different areas of memory. The first 64 Kbytes can be directly addressed. The first 96 bytes of general-purpose RAM (00:0020H–00:007FH) are bit addressable. Chapter 5, “Instructions and Addressing,” discusses addressing modes.

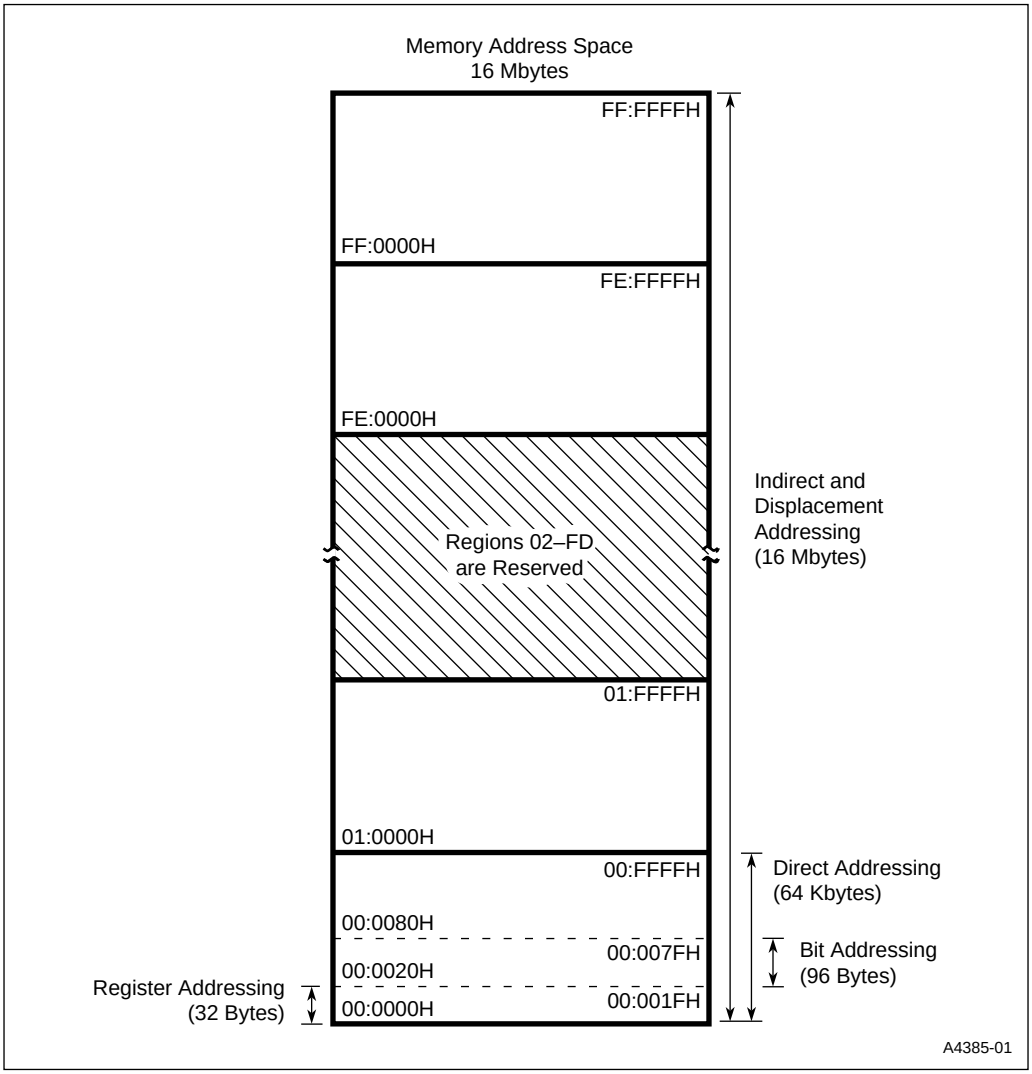

Figure 3-4. 8X930A*x* Address Space

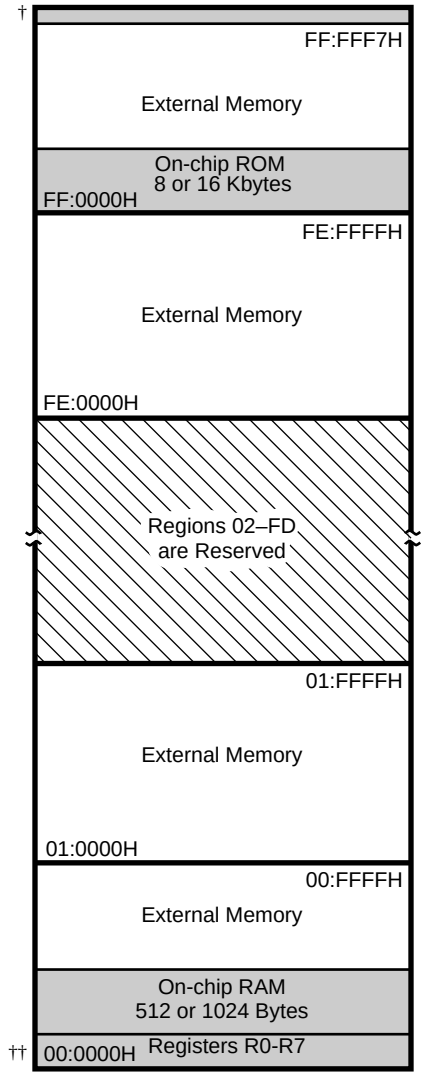

† Eight-byte configuration array (FF:FFF8H - FF:FFFFH)
†† Four banks of registers R0-R7 (32 bytes, 00:0000H - 00:001FH)

A4382-02

Figure 3-5. Hardware Implementation of the 8X930A*x* Address Space

Figure 3-5 shows how areas of the memory space are implemented by on-chip RAM and external memory. The first 32 bytes of on-chip RAM store banks 0–3 of the register file (see "8X930Ax Register File" on page 3-9).

3.2.1 On-chip General-purpose Data RAM

On-chip RAM (512 or 1024 bytes) provides general data storage (Figure 3-5). Instructions cannot execute from on-chip data RAM. The data is accessible by direct, indirect, and displacement addressing. Locations 00:0020H–00:007FH are also bit addressable.

3.2.2 On-chip Code Memory

The 8X930A*x* is available with 0, 8 or 16 Kbytes of on-chip ROM located in memory region FF:. (Figure 3-5). Table 2-1 on page 2-5 lists the amount of on-chip code memory for each device. On-chip ROM is intended primarily for code storage, although its contents can also be read as data with the indirect and displacement addressing modes. Following a chip reset, program execution begins at FF:0000H. Chapter 16, "Verifying Nonvolatile Memory," describes the procedure for verifying the contents of on-chip ROM.

A code fetch within the address range of the on-chip ROM accesses the on-chip ROM only if EA# = 1. For EA# = 0, a code fetch in this address range accesses external memory. The value of EA# is latched when the chip leaves the reset state. Code is fetched faster from on-chip code memory than from external memory. Table 3-2 lists the minimum times to fetch two bytes of code from on-chip memory and external memory.

NOTE

If your program executes exclusively from on-chip ROM (not from external memory), beware of executing code from the upper eight bytes of the on-chip ROM (FF:1FF8H–FF:1FFFH for 8 Kbytes, FF:3FF8H–FF:3FFFH for 16 Kbytes). Because of its pipeline capability, the 8XC251S*x* may attempt to prefetch code from external memory (at an address above FF:1FFFH/ FF:3FFFH) and thereby disrupt I/O ports 0 and 2. Fetching code constants from these eight bytes does not affect ports 0 and 2.

If your program executes from both on-chip ROM and external memory, code can be placed in the upper eight bytes of on-chip ROM. As the 8XC251S*x* fetches bytes above the top address in the on-chip ROM, code fetches automatically become external bus cycles. In other words, the rollover from on-chip ROM to external code memory is transparent to the user.

Table 3-2. Minimum Times to Fetch Two Bytes of Code

Type of Code Memory	State Times
On-chip Code Memory	1
External Memory (page mode)	2
External Memory (nonpage mode)	4

3.2.2.1 Accessing On-chip Code Memory in Region 00:

Devices with 16 Kbytes of on-chip code memory can be configured so that the upper half of the on-chip code memory can also be read as data at locations at the top of region 00: (see "Mapping On-chip Code Memory to Data Memory (EMAP#)" on page 4-14). That is, locations FF:2000H–FF:3FFFH can also be accessed at locations 00:E000H–00:FFFFH. This is useful for accessing code constants stored in ROM. Note, however, that all of the following three conditions must hold for this mapping to be effective:

- The device is configured with EMAP# = 0 in the UCONFIG1 register (See Figure 4-3 on page 4-5).
- EA# = 1.
- The access to this area of region 00: is a data read, not a code fetch.

If one or more of these conditions do not hold, accesses to the locations in region 00: are referred to external memory.

3.2.3 External Memory

Regions 01:, FE:, and portions of regions 00: and FF: of the memory space are implemented as external memory (Figure 3-5). For discussions of external memory, see "Configuring the External Memory Interface" on page 4-7, and Chapter 15, "External Memory Interface."

3.3 8X930A*x* REGISTER FILE

The 8X930A*x* register file consists of 40 locations: 0–31 and 56–63, as shown in Figure 3-6. These locations are accessible as bytes, words, and dwords, as described in "Byte, Word, and Dword Registers" on page 3-12." Several locations are dedicated to special registers (see "Dedicated Registers" on page 3-12); the remainder are general-purpose registers.

Register file locations 0–7 actually consist of four switchable banks of eight registers each, as illustrated in Figure 3-7 on page 3-11. The four banks are implemented as the first 32 bytes of on-chip RAM and are always accessible as locations 00:0000H–00:001FH in the memory address space.† Only one of the four banks is accessible via the register file at a given time. The accessi-

† Because these locations are dedicated to the register file, they are not considered a part of the general-purpose, 1-Kbyte, on-chip RAM (locations 00:0020H–00:041FH).

ble, or "active," bank is selected by bits RS1 and RS0 in the PSW register, as shown in Table 3-3. (The PSW is described in "Program Status Words" on page 5-15.") This bank selection can be used for fast context switches.

Register file locations 8–31 and 56–63 are always accessible. These locations are implemented as registers in the CPU. Register file locations 32–55 are reserved and cannot be accessed.

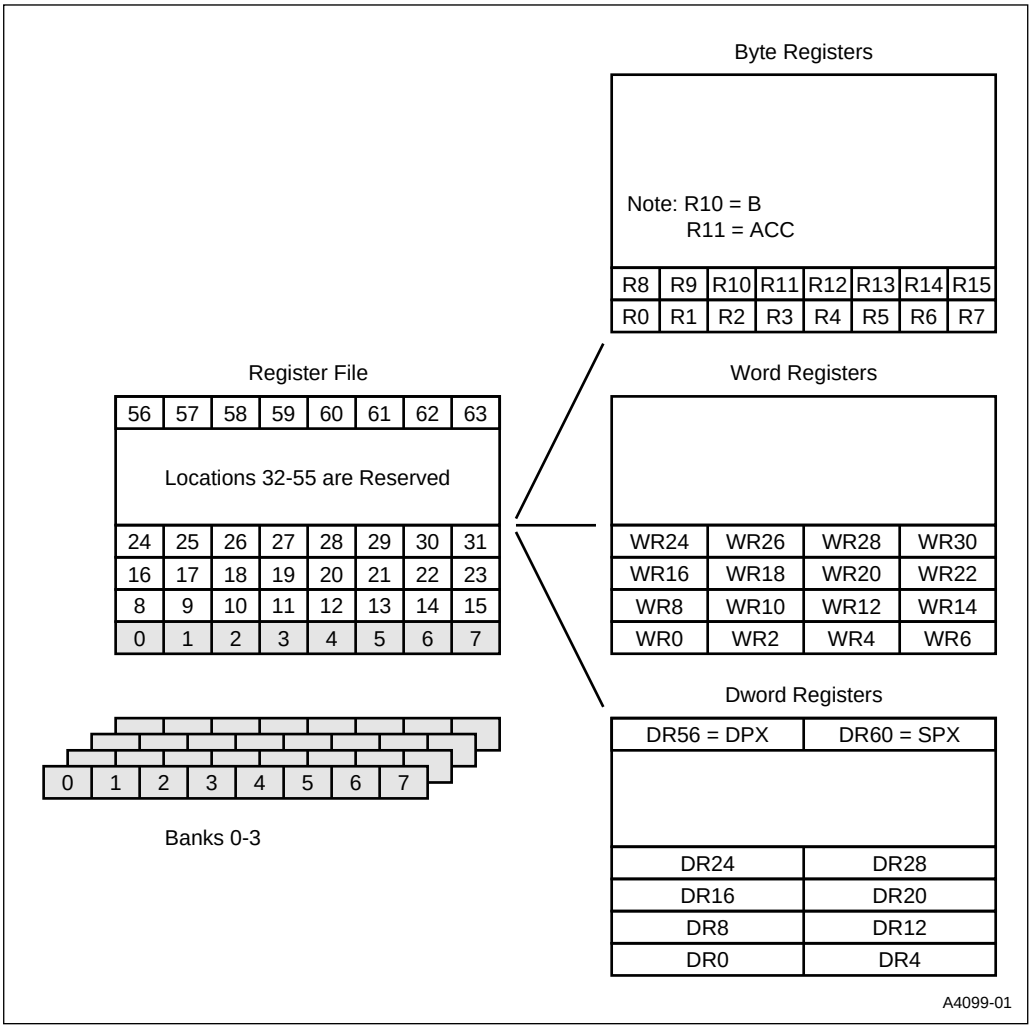

Figure 3-6. The Register File

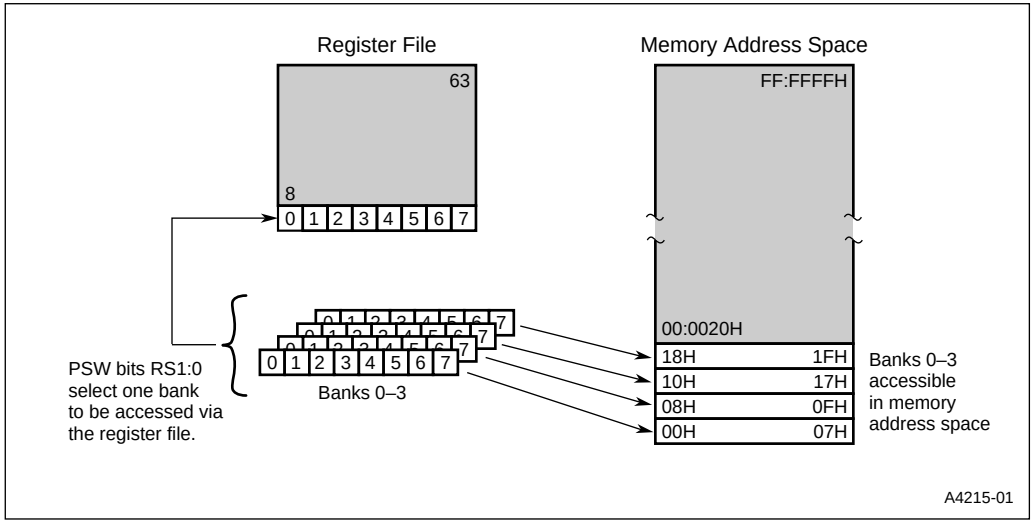

Figure 3-7. Register File Locations 0–7

Table 3-3. Register Bank Selection

Bank	Address Range	PSW Selection Bits	
		RS1	RS0
Bank 0	00H–07H	0	0
Bank 1	08H–0FH	0	1
Bank 2	10H–17H	1	0
Bank 3	18H–1FH	1	1

3.4 BYTE, WORD, AND DWORD REGISTERS

Depending on its location in the register file, a register is addressable as a byte, a word, and/or a dword, as shown on the right side of Figure 3-6. A register is named for its lowest numbered byte location. For example:

R4 is the byte register consisting of location 4.

WR4 is the word register consisting of registers 4 and 5.

DR4 is the dword register consisting of registers 4–7.

Locations R0–R15 are addressable as bytes, words, or dwords. Locations 16–31 are addressable only as words or dwords. Locations 56–63 are addressable only as dwords. Registers are addressed only by the names shown in Figure 3-6 — except for the 32 registers that comprise the four banks of registers R0–R7, which can also be accessed as locations 00:0000H–00:001FH in the memory space.

3.4.1 Dedicated Registers

The register file has four dedicated registers:

- R10 is the B-register
- R11 is the accumulator (ACC)
- DR56 is the extended data pointer, DPX
- DR60 is the extended stack pointer, SPX

These registers are located in the register file; however, R10; R11; the DPXL, DPH, and DPL bytes in DR56; and the SPH and SP bytes in DR60 are also accessible as SFRs. The bytes of DPX and SPX can be accessed in the register file only by addressing the dword registers. The dedicated registers in the register file and their corresponding SFRs are illustrated in Figure 3-8 and listed in Table 3-4.

3.4.1.1 Accumulator and B Register

The 8-bit *accumulator* (ACC) is byte register R11, which is also accessible in the SFR space as ACC at S:E0H (Figure 3-8). The *B register*, used in multiplies and divides, is register R10, which is also accessible in the SFR space as B at S:F0H. Accessing ACC or B as a register is one state faster than accessing them as SFRs.

Instructions in the MCS 51 architecture use the accumulator as the primary register for data moves and calculations. However, in the MCS 251 architecture, any of registers R1–R15 can serve for these tasks†. As a result, the accumulator does not play the central role that it has in MCS 51 microcontrollers.

† Bits in the PSW and PSW1 registers reflect the status of the accumulator. There are no equivalent status indicators for the other registers.

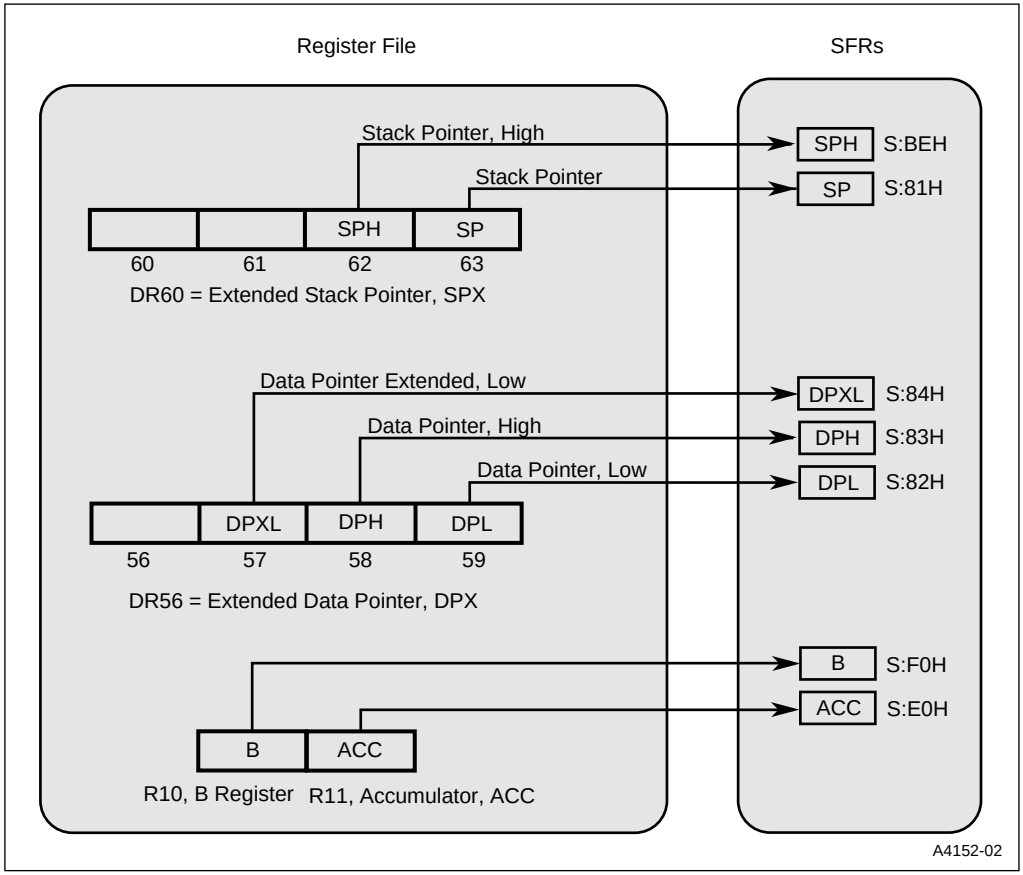

Figure 3-8. Dedicated Registers in the Register File and their Corresponding SFRs

3.4.1.2 Extended Data Pointer, DPX

Dword register DR56 is the *extended data pointer*, DPX (Figure 3-8). The lower three bytes of DPX (DPL, DPH, DPXL) are accessible as SFRs. DPL and DPH comprise the 16-bit *data pointer* DPTR. While instructions in the MCS 51 architecture always use DPTR as the data pointer, instructions in the MCS 251 architecture can use any word or dword register as a data pointer.

DPXL, the byte in location 57, specifies the region of memory (00:–FF:) that maps into the 64-Kbyte external data memory space in the MCS 51 architecture. In other words, the MOVX instruction addresses the region specified by DPXL when it moves data to and from external memory. The reset value of DPXL is 01H.

3.4.1.3 Extended Stack Pointer, SPX

Dword register DR60 is the *stack pointer*, SPX (Figure 3-8). The byte at location 63 is the 8-bit stack pointer, SP, in the MCS 51 architecture. The byte at location 62 is the *stack pointer high*, SPH. The two bytes allow the stack to extend to the top of memory region 00:. SP and SPH can be accessed as SFRs.

Two instructions, PUSH and POP directly address the stack pointer. Subroutine calls (ACALL, ECALL, LCALL) and returns (ERET, RET, RETI) also use the stack pointer. To preserve the stack, do not use DR60 as a general-purpose register.

Table 3-4. Dedicated Registers in the Register File and their Corresponding SFRs

Register File						SFRs	
Name			Mnemonic	Reg.	Location	Mnemonic	Address
Stack Pointer (SPX)	—		—	DR60	60	—	—
	—		—		61	—	—
	Stack Pointer, High		SPH		62	SPH	S:BEH
	Stack Pointer, Low		SP		63	SP	S:81H
Data Pointer (DPX)	—		—	DR56	56	—	—
	Data Pointer Extended, Low		DPXL		57	DPXL	S:84H
	DPTR	Data Pointer, High	DPH		58	DPH	S:83H
		Data Pointer, Low	DPL		59	DPL	S:82H
Accumulator (A Register)			A	R11	11	ACC	S:E0H
B Register			B	R10	10	B	S:F0H

3.5 SPECIAL FUNCTION REGISTERS (SFRS)

The special function registers (SFRs) reside in their associated on-chip peripherals or in the core. The SFR memory map in Table 3-5 gives the addresses and reset values of the 8X930A*x* SFRs. SFR addresses are preceded by “S:” to differentiate them from addresses in the memory space. Shaded locations in Table 3-5 and locations below S:80H and above S:FFH are unimplemented, i.e., no register exists. If an instruction attempts to write to an unimplemented SFR location, the instruction executes, but nothing is actually written. If an unimplemented SFR location is read, it returns an unspecified value. Descriptive tables for the SFRs are presented in alphabetical order in Appendix C.

NOTE

SFRs may be accessed only as bytes; they may not be accessed as words or dwords.

The following tables list the mnemonics, names, and addresses of the SFRs:

Table 3-6 — Core SFRs

Table 3-7 — USB Function SFRs

Table 3-8 — I/O Port SFRs

Table 3-9 — Serial I/O SFRs

Table 3-10 — Timer/Counter and Watchdog Timer SFRs

Table 3-11 — Programmable Counter Array (PCA) SFRs

Table 3-5. 8X930A*x* SFR Map

	0/8	1/9	2/A	3/B	4/C	5/D	6/E	7/F	
F8		CH 00000000	CCAP0H xxxxxxxx	CCAP1H xxxxxxxx	CCAP2H xxxxxxxx	CCAP3H xxxxxxxx	CCAP4H xxxxxxxx		FF
F0	B 00000000	EPINDEX 1xxxxx00	TXSTAT 0xxx0000	TXDAT xxxxxxxx	TXCON 000x0100	TXFLG 00xx1000	TXCNTL xxxxxxxx	TXCNTH xxxxxxxx	F7
E8		CL 00000000	CCAP0L xxxxxxxx	CCAP1L xxxxxxxx	CCAP2L xxxxxxxx	CCAP3L xxxxxxxx	CCAP4L xxxxxxxx		EF
E0	ACC 00000000	EPCON 00x1xxxx	RXSTAT 00000000	RXDAT xxxxxxxx	RXCON 0x000100	RXFLG 00xx1000	RXCNTL xxxxxxxx	RXCNTH xxxxxxxx	E7
D8	CCON 00x00000	CMOD 00xxx000	CCAPM0 x0000000	CCAPM1 x0000000	CCAPM2 x0000000	CCAPM3 x0000000	CCAPM4 x0000000	PCON1 xxxx0000	DF
D0	PSW 00000000	PSW1 00000000	SOFL 00000000	SOFH 00000000					D7
C8	T2CON 00000000	T2MOD xxxxxx00	RCAP2L 00000000	RCAP2H 00000000	TL2 00000000	TH2 00000000			CF
C0	FIFLG 00000000								C7
B8	IPL0 x0000000	SADEN 00000000					SPH 0000000		BF
B0	P3 11111111	IEN1 00000000	IPL1 00000000	IPH1 00000000				IPH0 x0000000	B7
A8	IEN0 00000000	SADDR 00000000							AF
A0	P2 11111111		FIE 00000000				WDTRST xxxxxxxx	WCON xxxxxx00	A7
98	SCON 00000000	SBUF xxxxxxxx							9F
90	P1 11111111								97
88	TCON 00000000	TMOD 00000000	TL0 00000000	TL1 00000000	TH0 00000000	TH1 00000000		FADDR 00000000	8F
80	P0 11111111	SP 00000111	DPL 00000000	DPH 00000000	DPXL 00000001			PCON 00XX0000	87
	0/8	1/9	2/A	3/B	4/C	5/D	6/E	7/F	

MCS 251 microcontroller SFRs

Endpoint-indexed SFRs

Table 3-6. Core SFRs

Mnemonic	Name	Address
ACC†	Accumulator	S:E0H
B†	B Register	S:F0H
PSW	Program Status Word	S:D0H
PSW1	Program Status Word 1	S:D1H
SP†	Stack Pointer – LSB of SPX	S:81H
SPH†	Stack Pointer High – MSB of SPX	S:BEH
DPTR†	Data Pointer (2 bytes)	—
DPL†	Low Byte of DPTR	S:82H
DPH†	High Byte of DPTR	S:83H
DPXL†	Data Pointer Extended, Low	S:84H
PCON	Power Control	S:87H
PCON1	USB Power Control.	S:DFH
IEN0	Interrupt Enable Control 0	S:A8H
IEN1	Interrupt Enable Register 1.	S:B1H
IPH0	Interrupt Priority Control High 0	S:B7H
IPL0	Interrupt Priority Control Low 0	S:B8H
IPH1	Interrupt Priority High Control Register 1.	S:B3H
IPL1	Interrupt Priority Low Control Register 1.	S:B2H

† These SFRs can also be accessed by their corresponding registers in the register file (see Table 3-4).

Table 3-7. USB Function SFRs

Mnemonic	Name	Address
EPCON	Endpoint Control Register.	S:E1H
EPINDEX	Endpoint Index Register.	S:F1H
FADDR	Function Address Register.	S:8FH
FIE	Function Interrupt Enable Register.	S:A2H
FIFLG	Function Interrupt Flag Register.	S:C0H
RXCNTH	Receive FIFO Byte-Count High Register.	S:E7H
RXCNTL	Receive FIFO Byte-Count Low Register.	S:E6H
RXCON	Receive FIFO Control Register.	S:E4H
RXDAT	Receive FIFO Data Register.	S:E3H
RXFLG	Receive FIFO Flag Register.	S:E5H
RXSTAT	Endpoint Receive Status Register.	S:E2H
SOFH	Start of Frame High Register.	S:D3H
SOFL	Start of Frame Low Register.	S:D2H
TXCNTH	Transmit Count High Register.	S:F7H
TXCNTL	Transmit Count Low Register.	S:F6H
TXCON	Transmit FIFO Control Register.	S:F4H
TXDAT	Transmit FIFO Data Register.	S:F3H
TXFLG	Transmit Flag Register.	S:F5H
TXSTAT	Endpoint Transmit Status Register.	S:FAH

Table 3-8. I/O Port SFRs

Mnemonic	Name	Address
P0	Port 0	S:80H
P1	Port 1	S:90H
P2	Port 2	S:A0H
P3	Port 3	S:B0H

Table 3-9. Serial I/O SFRs

Mnemonic	Name	Address
SCON	Serial Control	S:98H
SBUF	Serial Data Buffer	S:99H
SADEN	Slave Address Mask	S:B9H
SADDR	Slave Address	S:A9H

Table 3-10. Timer/Counter and Watchdog Timer SFRs

Mnemonic	Name	Address
TL0	Timer/Counter 0 Low Byte	S:8AH
TH0	Timer/Counter 0 High Byte	S:8CH
TL1	Timer/Counter 1 Low Byte	S:8BH
TH1	Timer/Counter 1 High Byte	S:8DH
TL2	Timer/Counter 2 Low Byte	S:CCH
TH2	Timer/Counter 2 High Byte	S:CDH
TCON	Timer/Counter 0 and 1 Control	S:88H
TMOD	Timer/Counter 0 and 1 Mode Control	S:89H
T2CON	Timer/Counter 2 Control	S:C8H
T2MOD	Timer/Counter 2 Mode Control	S:C9H
RCAP2L	Timer 2 Reload/Capture Low Byte	S:CAH
RCAP2H	Timer 2 Reload/Capture High Byte	S:CBH
WDTRST	WatchDog Timer Reset	S:A6H

Table 3-11. Programmable Counter Array (PCA) SFRs

Mnemonic	Name	Address
CCON	PCA Timer/Counter Control	S:D8H
CMOD	PCA Timer/Counter Mode	S:D9H
CCAPM0	PCA Timer/Counter Mode 0	S:DAH
CCAPM1	PCA Timer/Counter Mode 1	S:DBH
CCAPM2	PCA Timer/Counter Mode 2	S:DCH
CCAPM3	PCA Timer/Counter Mode 3	S:DDH
CCAPM4	PCA Timer/Counter Mode 4	S:DEH
CL	PCA Timer/Counter Low Byte	S:E9H
CH	PCA Timer/Counter High Byte	S:F9H
CCAP0L	PCA Compare/Capture Module 0 Low Byte	S:EAH
CCAP1L	PCA Compare/Capture Module 1 Low Byte	S:EBH
CCAP2L	PCA Compare/Capture Module 2 Low Byte	S:ECH
CCAP3L	PCA Compare/Capture Module 3 Low Byte	S:EDH
CCAP4L	PCA Compare/Capture Module 4 Low Byte	S:EEH
CCAP0H	PCA Compare/Capture Module 0 High Byte	S:FAH
CCAP1H	PCA Compare/Capture Module 1 High Byte	S:FBH
CCAP2H	PCA Compare/Capture Module 2 High Byte	S:FCH
CCAP3H	PCA Compare/Capture Module 3 High Byte	S:FDH
CCAP4H	PCA Compare/Capture Module 4 High Byte	S:FEH

4

Device Configuration

CHAPTER 4
DEVICE CONFIGURATION

The 8X930A*x* provides design flexibility by configuring certain operating features during device reset. These features fall into the following categories:

- external memory interface (page mode, address bits, wait states, range for RD#, WR#, and PSEN#)
- source mode/binary mode opcodes
- selection of bytes stored on the stack by an interrupt
- mapping of the upper portion of on-chip code memory to region 00:

You can specify a 16-bit, 17-bit, or 18-bit external addresses bus (256 Kbyte external address space). Wait state selection provides 0, 1, 2, or 3 wait states.

This chapter provides a detailed discussion of device configuration. It describes the configuration bytes and provides information to aid you in selecting a suitable configuration for your application. It discusses the choices involved in configuring the external memory interface and shows how the internal memory space maps into external memory. See "Configuring the External Memory Interface" on page 4-7. "Opcode Configurations (SRC)" on page 4-12 discusses the choice of source mode or binary mode opcode arrangements.

4.1 CONFIGURATION OVERVIEW

The configuration of the 8X930A*x* is established by the reset routine based on information stored in configuration bytes. The 8X930A*x* stores configuration information in two user configuration bytes (UCONFIG0 and UCONFIG1) located in code memory. Devices with no on-chip code memory fetch configuration data from external memory. Factory programmed ROM devices use customer-provided configuration data supplied on floppy disk.

4.2 DEVICE CONFIGURATION

The 8X930A*x* reserves the top eight bytes of the memory address space (FF:FFF8H–FF:FFFFH) for an eight-byte configuration array (Figure 4-1). The two lowest bytes of the configuration array are assigned to the two configuration bytes UCONFIG0 (FF:FFF8H) and UCONFIG1 (FF:FFF9H). Bit definitions of UCONFIG0 and UCONFIG1 are provided in Figures 4-3 and 4-4. The upper six bytes of the configuration array are reserved for future use.

When EA# = 1, the 8XC251S*x* obtains configuration information at reset from on-chip nonvolatile memory at addresses FF:FFF8H and FF:FFF9H. For ROM devices, configuration information is entered at these addresses during fabrication. The user can verify configuration information stored on-chip using the procedures presented in Chapter 16, "Verifying Nonvolatile Memory."

For devices without on-chip program memory, configuration information is accessed from external memory using these same addresses. The designer must store configuration information in an eight-byte configuration array located at the highest addresses implemented in external code memory. See Table 4-1 and Figure 4-2. When EA# = 0, the microcontroller obtains configuration information at reset from external memory using internal addresses FF:FFF8H and FF:FFF9H.

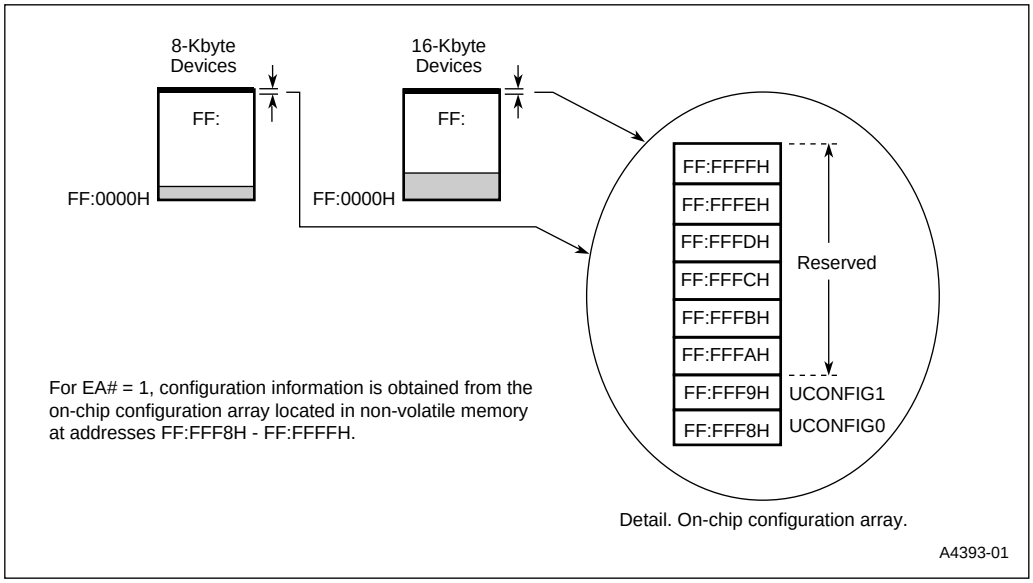

Figure 4-1. Configuration Array (On-chip)

Table 4-1. External Addresses for Configuration Array

Size of External Address Bus (Bits)	Address of Configuration Array on External Bus (2)	Address of Configuration Bytes on External Bus (1)
16	FFF8H–FFFFH	UCONFIG1: FFF9H UCONFIG0: FFF8H
17	1FFF8H–1FFFFH	UCONFIG1: 1FFF9H UCONFIG0: 1FFF8H
18	3FFF8H–3FFFFH	UCONFIG1: 3FFF9H UCONFIG0: 3FFF8H

NOTES:
1. When EA# = 0, the reset routine retrieves UCONFIG0 and UCONFIG1 from external memory using the internal addresses FF:FFF8H and FF:FFF9H which appear on the external address bus (A17, A16, A15:0) as shown in this table. See Figure 4-2.
2. The upper six bytes of the configuration array are reserved for future use.

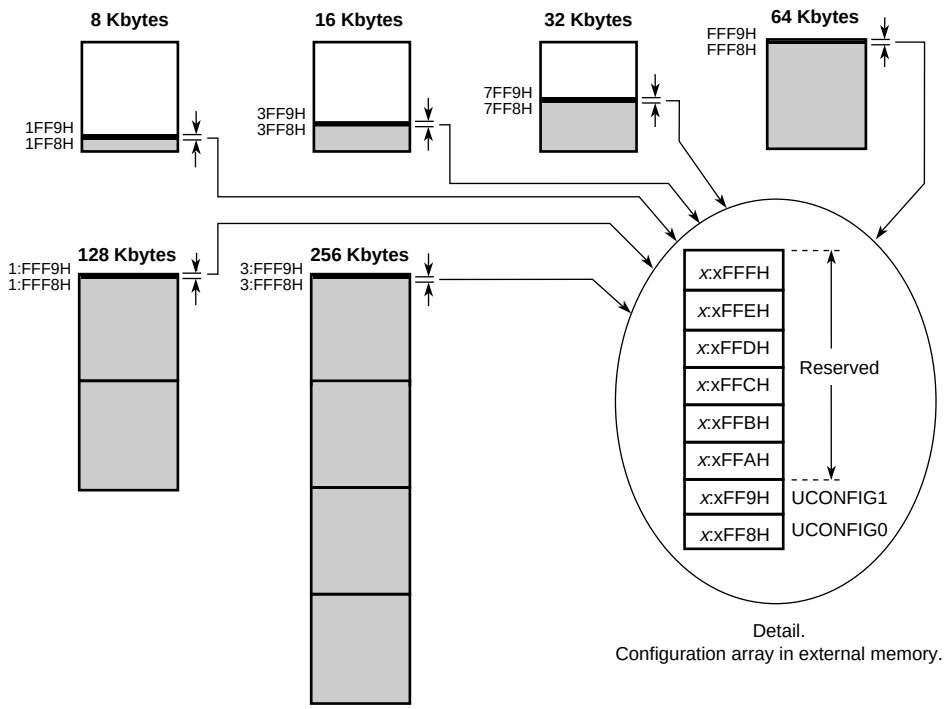

This figure shows the addresses of configuration bytes UCONFIG1 and UCONFIG0 in external memory for several memory implementations. For EA# = 0, configuration information is obtained from configuration bytes in external memory using internal addresses FF:FFF8H and FF:FFF9H. In external memory, the eight-byte configuration array is located at the highest addresses implemented.

A4394-01

Figure 4-2. Configuration Array (External)

CAUTION

The eight highest addresses in the memory address space (FF:FFF8H–FF:FFFFH) are reserved for the configuration array. Do not read or write application code at these locations. These address are also used to access the configuration array in external memory, so the same restrictions apply to the eight highest addresses implemented in external memory. Instructions that might inadvertently cause these addresses to be accessed due to call returns or prefetches should not be located at addresses immediately below the configuration array. Use an EJMP instruction, five or more addresses below the configuration array, to continue execution in other areas of memory.

4.3 THE CONFIGURATION BITS

This following list briefly describes the configuration bits contained in configuration bytes UCONFIG0 and UCONFIG1 (Figures 4-3 and 4-4):

- SRC. Selects source mode or binary mode opcode configuration.
- INTR. Selects the bytes pushed onto the stack by interrupts.
- EMAP#. Maps on-chip code memory (16 Kbyte devices only) to memory region 00:.

The following bits configure the external memory interface:

- PAGE#. Selects page/nonpage mode and specifies the data port.
- RD1:0. Selects the number of external address bus pins and the address range for RD#, WR, and PSEN#.
- XALE#. Extends the ALE pulse.
- WSA1:0#. Selects 0, 1, 2, or 3 wait states for all memory regions except 01:.
- WSB1:0#. Selects 0, 1, 2, or 3 wait states for memory region 01:.
- EMAP#. Affects the external memory interface in that, when asserted, addresses in the range 00:E000H–00:FFFFH access on-chip memory.

UCONFIG0
(1), (3)

Address: FF:FFF8H (2)

7							0
—	WSA1#	WSA0#	XALE#	RD1	RD0	PAGE#	SRC

Bit Number	Bit Mnemonic	Function
7	—	Reserved: Reserved for internal or future use. Set this bit when programming UCONFIG0.
6:5	WSA1:0#	Wait State A (all regions except 01:): For external memory accesses, selects the number of wait states for RD#, WR#, and PSEN#. **WSA1# WSA0#** 0 0 Inserts 3 wait states for all regions except 01: 0 1 Inserts 2 wait states for all regions except 01: 1 0 Inserts 1 wait state for all regions except 01: 1 1 Zero wait states for all regions except 01:
4	XALE#	Extend ALE: Set this bit for ALE = T_{OSC}. Clear this bit for ALE = $3T_{OSC}$ (adds one external wait state).
3:2	RD1:0	Memory Signal Selection: RD1:0 bit codes specify an 18-bit, 17-bit, or 16-bit external address bus and address ranges for RD#, WR#, and PSEN#. See Table 4-2 on page 4-7.
1	PAGE#	Page Mode Select: Clear this bit for page mode enabled with A15:8/D7:0 on P2 and A7:0 on P0. Set this bit for page mode disabled with A15:8 on P2 and A7:0/D7:0 on P0.
0	SRC	Source Mode/Binary Mode Select: Set this bit for source mode. Clear this bit for binary mode (opcodes compatible with MCS 51 microcontrollers).

NOTES:
1. User configuration bytes UCONFIG0 and UCONFIG1 define the configuration of the 8X930A*x*.
2. Address. UCONFIG0 is the lowest byte of the 8-byte configuration array. When EA# = 1, the 8X930A*x* fetches configuration information from an on-chip configuration array located in nonvolatile memory at the top of region FF:. When EA# = 0, the 8X930A*x* fetches configuration information from a configuration array located at the highest addresses implemented in external memory using addresses FF:FFF8H and FF:FFF9H. The physical location of the configuration array in external memory depends on the size and decode arrangement of the external memory (Table 4-1 and Figure 4-2).
3. Instructions for verifying on-chip configuration bytes are given in Chapter 16.

Figure 4-3. User Configuration Byte 0 (UCONFIG0)

UCONFIG1 (1),(3) Address: FF:FFF9H (2)

7							0
—	—	—	INTR	—	WSB1#	WSB0#	EMAP#

Bit Number	Bit Mnemonic	Function
7:5	—	Reserved: Reserved for internal or future use. Set these bits when programming UCONFIG1.
4	INTR	Interrupt Mode: If this bit is set, interrupts push 4 bytes onto the stack (the 3 bytes of the PC and PSW1). If this bit is clear, interrupts push the 2 lower bytes of the PC onto the stack. See "Interrupt Mode (INTR)" on page 4-14.
3	—	Reserved. Write a '1' to this bit.
2:1	WSB1:0#	External Wait State B (Region 01:): **WSB1# WSB0#** 0 0 Inserts 3 wait states for region 01: 0 1 Inserts 2 wait states for region 01: 1 0 Inserts 1 wait state for region 01: 1 1 Zero wait states for region 01:
0	EMAP#	EPROM Map: For devices with 16 Kbytes of on-chip code memory, clear this bit to map the upper half of on-chip code memory to region 00: (data memory). This maps FF:2000H–FF:3FFFH to 00:E000H–00:FFFFH. If this bit is set, mapping does not occur and addresses in the range 00:E000H–00:FFFFH access external RAM. See "Mapping On-chip Code Memory to Data Memory (EMAP#)" on page 14.

NOTES:
1. User configuration bytes UCONFIG0 and UCONFIG1 define the configuration of the 8X930A*x*.
2. Address. UCONFIG1 is the second lowest byte of the 8-byte configuration array. When EA# = 1, the 8X930A*x* fetches configuration information from an on-chip configuration array located in nonvolatile memory at the top of region FF:. When EA# = 0, the 8X930A*x* fetches configuration information from a configuration array located at the highest addresses implemented in external memory using addresses FF:FFF8H and FF:FFF9H. The physical location of the configuration array in external memory depends on the size and decode arrangement of the external memory (Table 4-1 and Figure 4-2).
3. Instructions for verifying on-chip configuration bytes are given in Chapter 16.

Figure 4-4. User Configuration Byte 1 (UCONFIG1)

Table 4-2. Memory Signal Selections (RD1:0)

RD1:0	A17/P1.7/ CEX4/WCLK	A16/P3.7/RD#	PSEN#	P3.6/WR#	Features
0 0	A17	A16	Asserted for all addresses	Asserted for writes to all memory locations	256 Kbyte external memory
0 1	P1.7/CEX4/ WCLK	A16	Asserted for all addresses	Asserted for writes to all memory locations	128 Kbyte external memory
1 0	P1.7/CEX4/ WCLK	P3.7 only	Asserted for all addresses	Asserted for writes to all memory locations	64 Kbyte external memory. One additional port pin.
1 1	P1.7/CEX4/ WCLK	RD# asserted for addresses ≤ 7F:FFFFH	Asserted for ≥ 80:0000H	Asserted only for writes to MCS® 51 microcontroller data memory locations.	64 Kbyte external memory. Compatible with MCS 51 microcontrollers.

NOTE: RD1:0 are bits 3:2 of configuration byte UCONFIG0 (Figure 4-3).

4.4 CONFIGURING THE EXTERNAL MEMORY INTERFACE

This section describes the configuration options that affect the external memory interface. The configuration bits described here determine the following interface features:

- page mode or nonpage mode (PAGE#)
- the number of external address pins — 16, 17, or 18 (RD1:0)
- the memory regions assigned to the read signals RD# and PSEN# (RD1:0)
- the external wait states (WSA1:0#, WSB1:0#, XALE#)
- mapping a portion of on-chip code memory to data memory (EMAP#)

4.4.1 Page Mode and Nonpage Mode (PAGE#)

The PAGE# bit (UCONFIG0.1) selects page-mode or nonpage-mode code fetches and determines whether data is transmitted on P2 or P0. See Figure 15-1 on page 15-1 and “Page Mode Bus Cycles” on page 15-6 for a description of the bus structure and page mode operation.

- Nonpage mode: PAGE# = 1. The bus structure is the same as for the MCS 51 architecture with data D7:0 multiplexed with A7:0 on P0. External code fetches require two state times ($4T_{OSC}$).
- Page mode: PAGE# = 0. The bus structure differs from the bus structure in MCS 51 controllers. Data D7:0 is multiplexed with A15:8 on P2. Under certain conditions, external code fetches require only one state time ($2T_{OSC}$).

4.4.2 Configuration Bits RD1:0

The RD1:0 configuration bits (UCONFIG0.3:2) determine the number of external address lines and the address ranges for asserting the read signals PSEN#/RD# and the write signal WR#. These selections offer different ways of addressing external memory. Figures 4-5 and 4-6 show how internal memory space maps into external memory space for the four values of RD1:0. Chapter 15, "External Memory Interface," provides examples of external memory designs for each choice of RD1:0.

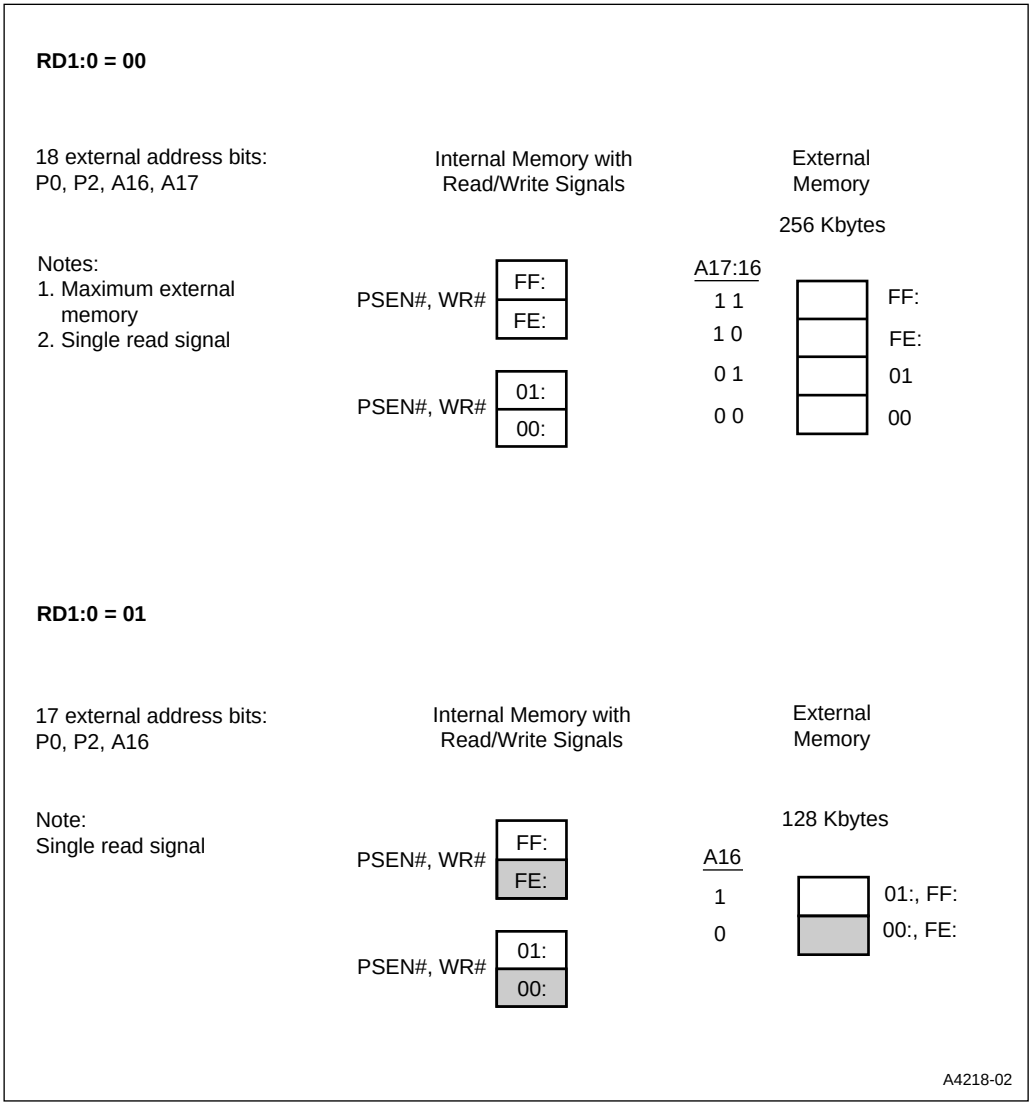

Figure 4-5. Internal/External Address Mapping (RD1:0 = 00 and 01)

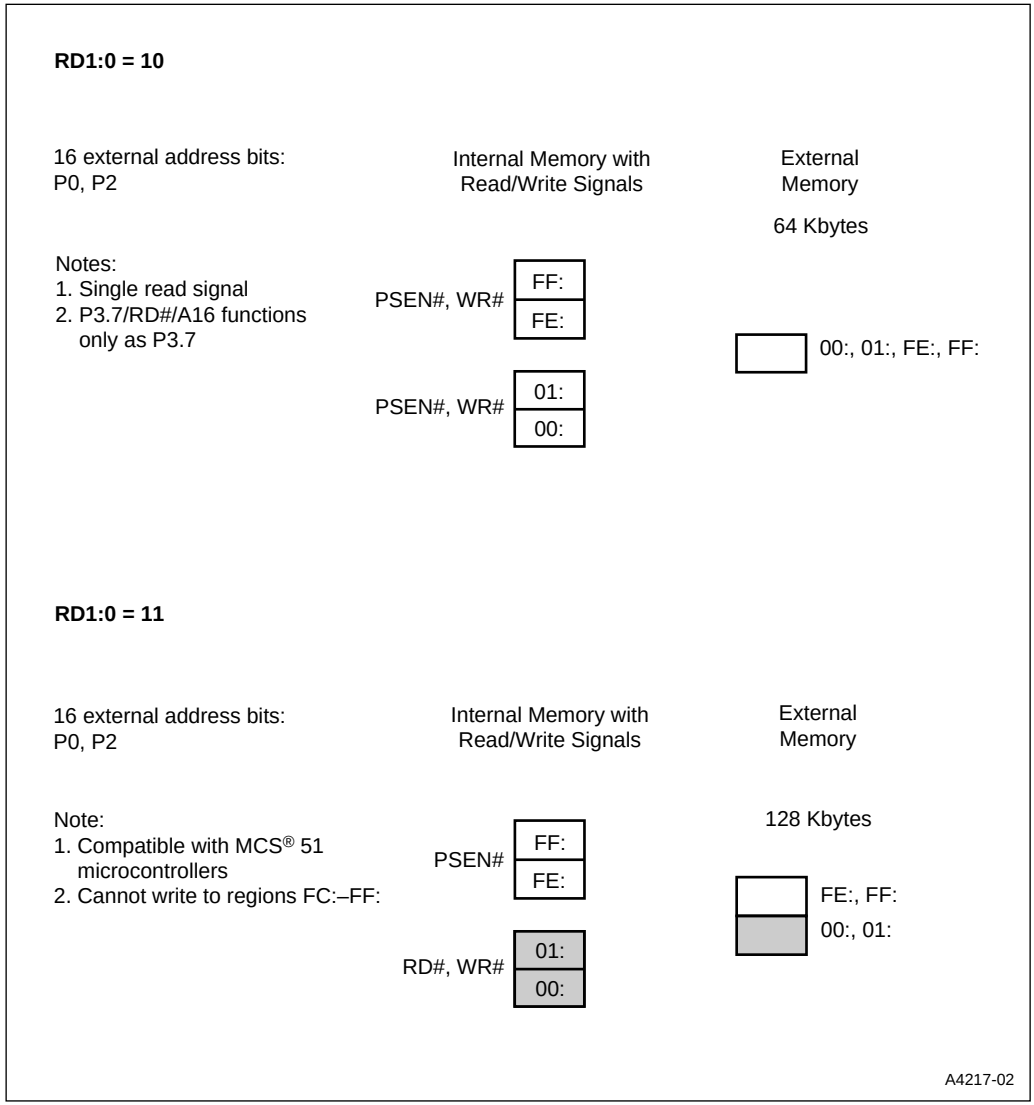

Figure 4-6. Internal/External Address Mapping (RD1:0 = 10 and 11)

A key to the memory interface is the relationship between internal memory addresses and external memory addresses. While the 8X930A*x* has 24 internal address bits, the number of external address lines is less than 24 (i.e., 16, 17, or 18, depending on the values of RD1:0). This means that reads/writes to different internal memory addresses can access the same location in external memory.

For example, if the 8X930A*x* is configured for 18 external address lines, a write to location 01:6000H and a write to location FF:6000H accesses the same 18-bit external address (1:6000H) because A16 = 1 and A17 = 1 for both internal addresses. In other words, regions 00: and FE: map into the same 64 Kbyte region in external memory.

In some situations, however, a multiple mapping from internal memory to external memory does not preclude using more than one region. For example, for a device with on-chip ROM configured for 17 address bits and with EA# = 1, an access to FF:0000H–FF:3FFFH (16 Kbytes) accesses the on-chip ROM, while an access to 01:0000H–01:3FFFH is to external memory. In this case, you could execute code from these locations in region FF: and store data in the corresponding locations in region 01: without conflict. See Figure 4-5 and "Example 1: RD1:0 = 00, 18-bit Bus, External Flash and RAM" on page 15-18."

4.4.2.1 RD1:0 = 00 (18 External Address Bits)

The selection RD1:0 = 00 provides 18 external address bits: A15:0 (ports P0 and P2), A16 (from P3.7/RD#/A16), and A17 (from P1.7/CEX4/A17/WCLK). Bits A16 and A17 can select four 64 Kbyte regions of external memory for a total of 256 Kbytes (top half of Figure 4-5). This is the largest possible external memory space. See "Example 1: RD1:0 = 00, 18-bit Bus, External Flash and RAM" on page 15-18.

4.4.2.2 RD1:0 = 01 (17 External Address Bits)

The selection RD1:0 = 01 provides 17 external address bits: A15:0 (ports P0 and P2) and A16 (from P3.7/RD#/A16). Bit A16 can select two 64 Kbyte regions of external memory for a total of 128 Kbytes (bottom half of Figure 4-5). Regions 00: and FE: (each having A16 = 0) map into the same 64 Kbyte region in external memory. This duplication also occurs for regions 01: and FF:.

This selection provides a 128 Kbyte external address space. The advantage of this selection, in comparison with the 256 Kbyte external memory space with RD1:0 = 00, is the availability of pin P1.7/CEX4/A17/WCLK for general I/O, PCA I/O or real-time wait clock output. I/O P3.7 is unavailable. All four 64 Kbyte regions are strobed by PSEN# and WR#. Chapter 15, "External Memory Interface," shows examples of memory designs with this option.

4.4.2.3 RD1:0 = 10 (16 External Address Bits)

For RD1:0 = 10, the 16 external address bits (A15:0 on ports P0 and P2) provide a single 64 Kbyte region in external memory (top of Figure 4-6). This selection provides the smallest external memory space; however, pin P3.7/RD#/A16 is available for general I/O and pin P1.7/CEX4/A17 is available for general I/O or PCA I/O. This selection is useful when the availability of these pins is required and/or a small amount of external memory is sufficient.

4.4.2.4 RD1:0 = 11 (Compatible with MCS 51 Microcontrollers)

The selection RD1:0 = 11 provides only 16 external address bits (A15:0 on ports P0 and P2). However, PSEN# is the read signal for regions FE:–FF:, while RD# is the read signal for regions 00:–01: (bottom of Figure 4-6). The two read signals effectively expand the external memory space to two 64 Kbyte regions. WR# is asserted only for writes to regions 00:–01:. This selection provides compatibility with MCS 51 microcontrollers, which have separate external memory spaces for code and data.

4.4.3 Wait State Configuration Bits

You can add wait states to external bus cycles by extending the RD#/WR#/PSEN# pulse and/or extending the ALE pulse. Each additional wait state extends the pulse by $2T_{OSC}$. A separate wait state specification for external accesses via region 01: permits a slow external device to be addressed in region 01: without slowing accesses to other external devices. Table 4-3 summarizes the wait state selections for RD#,WR#,PSEN#. For waveform diagrams showing wait states, see “External Bus Cycles With Configurable Wait States” on page 15-8.

4.4.3.1 Configuration Bits WSA1:0#, WSB1:0#

The WSA1:0# wait state bits (UCONFIG0.6:5) permit RD#, WR#, and PSEN# to be extended by 1, 2, or 3 wait states for accesses to external memory via all regions except region 01:. The WSB1:0# wait state bits (UCONFIG1.2:1) permit RD#, WR#, and PSEN# to be extended by 1, 2, or 3 wait states for accesses to external memory via region 01:.

4.4.3.2 Configuration Bit XALE#

Clearing XALE# (UCONFIG0.4) extends the time ALE is asserted from T_{OSC} to $3T_{OSC}$. This accommodates an address latch that is too slow for the normal ALE signal. Figure 15-10 on page 15-10 shows an external bus cycle with ALE extended.

Table 4-3. RD#, WR#, PSEN# External Wait States

8X930A*x*			
Regions 00: FE: FF:	WSA1#	WSA0#	
	0	0	3 Wait States
	0	1	2 Wait States
	1	0	1 Wait State
	1	1	0 Wait States
Region 01:	WSB1#	WSB0#	
	0	0	3 Wait States
	0	1	2 Wait States
	1	0	1 Wait State
	1	1	0 Wait States

4.5 OPCODE CONFIGURATIONS (SRC)

The SRC configuration bit (UCONFIG0.0) selects the source mode or binary mode opcode arrangement. Opcodes for the 8X930A*x* architecture are listed in Table A-6 on page A-4 and Table A-7 on page A-5. Note that in Table A-6 every opcode (00H–FFH), is used for an instruction except A5H (ESC), which provides an alternative set of opcodes for columns 6H through FH. The SRC bit selects which set of opcodes is assigned to columns 6H through FH and which set is the alternative.

Binary mode and *source mode* refer to two ways of assigning opcodes to the instruction set for the 8X930A*x* architecture. One of these modes must be selected when the chip is configured. Depending on the application, binary mode or source mode may produce more efficient code. This section describes the binary and source modes and provides some guidelines for selecting the mode for your application.

The 8X930A*x* architecture has two types of instructions:

- instructions that originate in the MCS® 51 architecture
- instructions that are common with the MCS® 251 architecture

Figure 4-7 shows the opcode map for binary mode. Area I (columns 1 through 5 in Table A-7) and area II (columns 6 through F) make up the opcode map for the instructions that originate in the MCS 51 architecture. Area III in Figure 4-7 represents the opcode map for the instructions that are common with the MCS 251 architecture (Table A-7). Some of these opcodes are reserved for future instructions. Note that the opcode values for areas II and III are identical (06H–FFH). To distinguish between the two areas in binary mode, the opcodes in area III are given the prefix A5H. The area III opcodes are thus A506H–A5FFH.

Figure 4-8 shows the opcode map for source mode. Areas II and III have switched places (compare with Figure 4-7). In source mode, opcodes for instructions in area II require the A5F escape prefix while opcodes for instructions in area III do not.

To illustrate the difference between the binary-mode and source-mode opcodes, Table 4-4 shows the opcode assignments for three sample instructions.

4.5.1 Selecting Binary Mode or Source Mode

If a system was originally developed using an MCS 51 microcontroller, and if the new 8X930A*x*-based system will run code written for the MCS 51 microcontroller, performance will be better with the 8X930A*x* running in binary mode. Object code written for the MCS 51 microcontroller runs faster on the 8X930A*x*.

However, if most of the code is rewritten using the MCS 251 instruction set, performance will be better with the 8X930A*x* running in source mode. In this case, the 8X930A*x* can run significantly faster than the MCS 51 microcontroller.

If you have code that was written for an MCS 51 microcontroller and you want to run it unmodified on an 8X930A*x*, choose binary mode. You can use the object code without reassembling the source code. You can also assemble the source code with an assembler for the MCS 251 architecture and have it produce object code that is binary-compatible with MCS 51 microcontrollers.

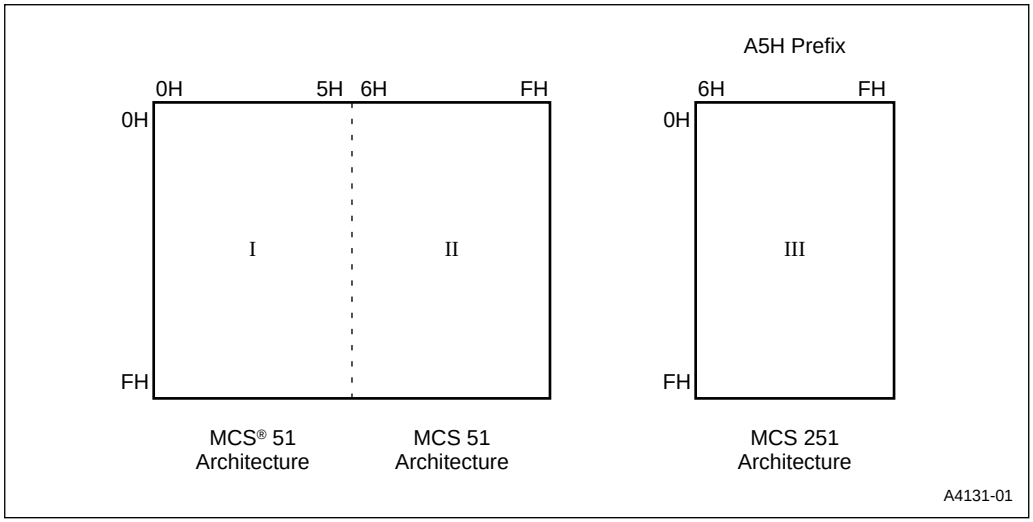

Figure 4-7. Binary Mode Opcode Map

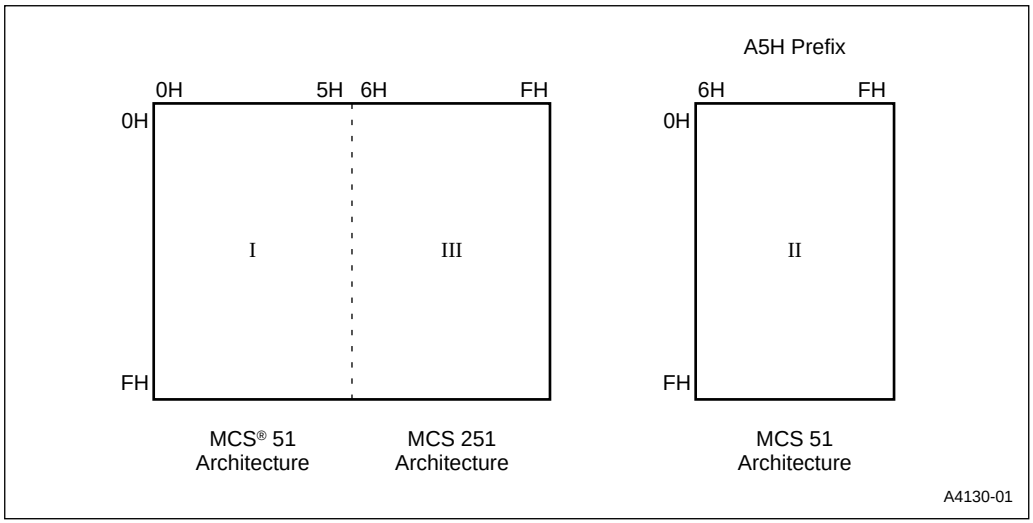

Figure 4-8. Source Mode Opcode Map

Table 4-4. Examples of Opcodes in Binary and Source Modes

Instruction	Opcode	
	Binary Mode	Source Mode
DEC A	14H	14H
SUBB A,R4	9CH	A59CH
SUB R4,R4	A59CH	9CH

If a program uses only instructions from the MCS 51 architecture, the binary-mode code is more efficient because it uses no prefixes. On the other hand, if a program uses many more new instructions than instructions from the MCS 51 architecture, source mode is likely to produce more efficient code. For a program where the choice is not clear, the better mode can be found by experimenting with a simulator.

For both architectures, an instruction with a prefixed opcode requires one more byte for code storage, and if an additional fetch is required for the extra byte, the execution time is increased by one state. This means that using fewer prefixed opcodes produces more efficient code.

4.6 MAPPING ON-CHIP CODE MEMORY TO DATA MEMORY (EMAP#)

For devices with 16 Kbytes of on-chip code memory (83930AB), the EMAP# bit (UCONFIG1.0) provides the option of accessing the upper half of on-chip code memory as data memory. This allows code constants to be accessed as data in region 00: using direct addressing. See "Accessing On-chip Code Memory in Region 00:" on page 3-9 for the exact conditions required for this mapping to be effective.

EMAP# = 0. For the 83930AB, the upper eight Kbytes of on-chip code memory (FF:2000–FF:3FFFH are mapped to locations 00:E000H–00:FFFFH.

EMAP# = 1. Mapping of on-chip code memory to region 00: does not occur. Addresses in the range 00:E000H–00:FFFFH access external RAM.

4.7 INTERRUPT MODE (INTR)

The INTR bit (UCONFIG1.4) determines what bytes are stored on the stack when an interrupt occurs and how the RETI (Return from Interrupt) instruction restores operation.

For INTR = 0, an interrupt pushes the two lower bytes of the PC onto the stack in the following order: PC.7:0, PC.15:8. The RETI instruction pops these two bytes in the reverse order and uses them as the 16-bit return address in region FF:.

For INTR = 1, an interrupt pushes the three PC bytes and the PSW1 register onto the stack in the following order: PSW1, PC.23:16, PC.7:0, PC.15:8. The RETI instruction pops these four bytes and then returns to the specified 24-bit address, which can be anywhere in the 16 Mbyte address space.

5

Instructions and Addressing

CHAPTER 5
INSTRUCTIONS AND ADDRESSING

The instruction set for the architecture supports the instruction set for the MCS® 51 architecture and MCS® 251 architecture. This chapter describes the addressing modes and summarizes the instruction set, which is divided into data instructions, bit instructions, and control instructions. The program status word registers PSW and PSW1 are also described. Appendix A, "Instruction Set Reference," contains an opcode map and a detailed description of each instruction.

NOTE

The instruction execution times given in Appendix A are for code executing from external memory and for data that is read from and written to on-chip RAM. Execution times are increased by accessing peripheral SFRs, accessing data in external memory, using a wait state, or extending the ALE pulse.

For some instructions, accessing the port SFRs (P*x*, *x* = 3:0) increases the execution time. These cases are noted in the tables in Appendix A.

5.1 SOURCE MODE OR BINARY MODE OPCODES

Source mode and *Binary mode* refer to the two ways of assigning opcodes to the instruction set of the 8X930A*x*. Depending on the application, one mode or the other may produce more efficient code. The mode is established during device reset based on the value of the SRC bit in configuration byte UCONFIG0. For information regarding the selection of the opcode mode, see "Opcode Configurations (SRC)" on page 4-12.

5.2 PROGRAMMING FEATURES OF THE 8X930A*x* ARCHITECTURE

The instruction set for 8X930A*x* microcontrollers provides the user with instructions that exploit the features of the MCS 251 architecture while maintaining compatibility with the instruction set for MCS 51 microcontrollers. Many of the MCS 251 architecture instructions operate on 8-bit, 16-bit, or 32-bit operands. (In comparison with 8-bit and 16-bit operands, 32-bit operands are accessed with fewer addressing modes.) This capability increases the ease and efficiency of programming the 8X930A*x* microcontroller in a high-level language such as C.

The instruction set is divided into data instructions, bit instructions, and control instructions. These are described in this chapter. Data instructions process 8-bit, 16-bit, and 32-bit data; bit instructions manipulate bits; and control instructions manage program flow.

5.2.1 Data Types

Table 5-1 lists the data types that are addressed by the instruction set. Words or dwords (double words) can be in stored memory starting at any byte address; alignment on two-byte or four-byte boundaries is not required. Words and dwords are stored in memory and the register file in *big endien* form.

Table 5-1. Data Types

Data Type	Number of Bits
Bit	1
Byte	8
Word	16
Dword (Double Word)	32

5.2.1.1 Order of Byte Storage for Words and Double Words

The 8X930A*x* microcontroller stores words (2 bytes) and double words (4 bytes) in memory and in the register file in big endien form. In memory storage, the most significant byte (MSB) of the word or double word is stored in the memory byte specified in the instruction; the remaining bytes are stored at higher addresses, with the least significant byte (LSB) at the highest address. Words and double words can be stored in memory starting at any byte address. In the register file, the MSB is stored in the lowest byte of the register specified in the instruction. For a description of the register file, see "8X930Ax Register File" on page 3-9. The code fragment in Figure 5-1 illustrates the storage of words and double words in big endien form.

5.2.2 Register Notation

In register-addressing instructions, specific indices denote the registers that can be used in that instruction. For example, the instruction ADD A,Rn uses "Rn" to denote any one of R0, R1, ..., R7; i.e., the range of n is 0–7. The instruction ADD Rm,#data uses "Rm" to denote R0, R1, ..., R15; i.e., the range of m is 0–15. Table 5-2 summarizes the notation used for the register indices. When an instruction contains two registers of the same type (e.g., MOV Rmd,Rms) the first index "d" denotes "destination" and the second index "s" denotes "source."

5.2.3 Address Notation

In the 8X930A*x* architecture, memory addresses include a region number (00:, 01:, ..., FF:) (Figure 3-5 on page 3-7). SFR addresses have a prefix "S:" (S:000H–S:1FFH). The distinction between memory addresses and SFR addresses is necessary because memory locations 00:0000H–00:01FFH and SFR locations S:000H–S:1FFH can both be directly addressed in an instruction.

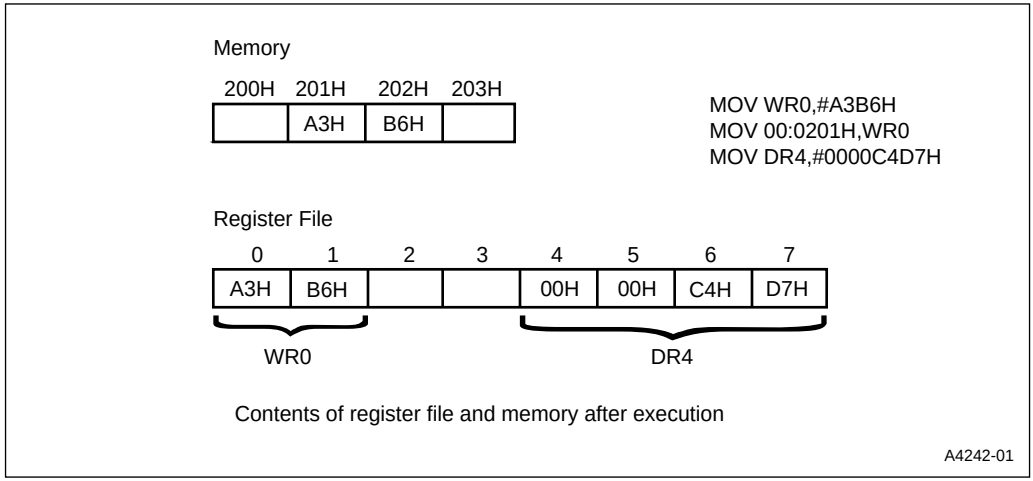

Figure 5-1. Word and Double-word Storage in Big Endien Form

Table 5-2. Notation for Byte Registers, Word Registers, and Dword Registers

Register Type	Register Symbol	Destination Register	Source Register	Register Range
Byte	Ri	—	—	R0, R1
	Rn	—	—	R0–R7
	Rm	Rmd	Rms	R0–R15
Word	WRj	WRjd	WRjs	WR0, WR2, WR4, ..., WR30
Dword	DRk	DRkd	DRks	DR0, DR4, DR8, ..., DR28, DR56, DR60

Instructions in the MCS 51 architecture use 80H–FFH as addresses for both memory locations and SFRs, because memory locations are addressed only indirectly and SFR locations are addressed only directly. For compatibility, software tools for 8X930A*x* microcontrollers recognize this notation for instructions in the 8X930A*x* architecture. No change is necessary in any code written for MCS 51 controllers.

For the MCS 251 architecture instructions, the memory region prefixes (00:, 01, ..., FF:) and the SFR prefix (S:) are required. Also, software tools for the 8X930A*x* architecture permit 00: to be used for memory addresses 00H–FFH and permit the prefix S: to be used for SFR addresses in instructions in the 8X930A*x* architecture.

5.2.4 Addressing Modes

The 8X930A*x* architecture supports the following addressing modes:

- **register addressing**: The instruction specifies the register that contains the operand.
- **immediate addressing**: The instruction contains the operand.
- **direct addressing**: The instruction contains the operand address.
- **indirect addressing**: The instruction specifies the register that contains the operand address.
- **displacement addressing**: The instruction specifies a register and an offset. The operand address is the sum of the register contents (the base address) and the offset.
- **relative addressing**: The instruction contains the signed offset from the next instruction to the target address (the address for transfer of control, e.g., the jump address).
- **bit addressing**: The instruction contains the bit address.

More detailed descriptions of the addressing modes are given in "Data Addressing Modes" on page 5-4, "Bit Addressing" on page 5-10, and "Addressing Modes for Control Instructions" on page 5-12.

5.3 DATA INSTRUCTIONS

Data instructions consist of arithmetic, logical, and data-transfer instructions for 8-bit, 16-bit, and 32-bit data. This section describes the data addressing modes and the set of data instructions.

5.3.1 Data Addressing Modes

This section describes the data-addressing modes, which are summarized in two tables: Table 5-4 for the instructions that are native to the MCS 51 architecture, and Table 5-4 for the data instructions in the MCS 251architecture.

NOTE

References to registers R0–R7, WR0–WR6, DR0, and DR2 always refer to the register bank that is currently selected by the PSW and PSW1 registers (see "Program Status Words" on page 5-15). Registers in all banks (active and inactive) can be accessed as memory locations in the range 00H–1FH.

Instructions from the MCS 51 architecture access external memory through the region of memory specified by byte DPXL in the extended data pointer register, DPX (DR56). Following reset, DPXL contains 01H, which maps the external memory to region 01:. You can specify a different region by writing to DR56 or the DPXL SFR (see "Dedicated Registers" on page 3-12).

5.3.1.1 Register Addressing

Both architectures address registers directly:

- MCS 251 architecture. In the register addressing mode, the operand(s) in a data instruction are in byte registers (R0–R15), word registers (WR0, WR2, ..., WR30), or dword registers (DR0, DR4, ..., DR28, DR56, DR60).
- MCS 51 architecture. Instructions address registers R0–R7 only.

5.3.1.2 Immediate

Both architectures use immediate addressing.

- MCS 251 architecture. In the immediate addressing mode, the instruction contains the data operand itself. Byte operations use 8-bit immediate data (#data); word operations use 16-bit immediate data (#data16). Dword operations use 16-bit immediate data in the lower word, and either zeros in the upper word (denoted by #0data16), or ones in the upper word (denoted by #1data16). MOV instructions that place 16-bit immediate data into a dword register (DRk), place the data either into the upper word while leaving the lower word unchanged, or into the lower word with a sign extension or a zero extension.

  The increment and decrement instructions contain immediate data (#short = 1, 2, or 4) that specifies the amount of the increment/decrement.
- MCS 51 architecture. Instructions use only 8-bit immediate data (#data).

5.3.1.3 Direct

- MCS 251 architecture. In the direct addressing mode, the instruction contains the address of the data operand. The 8-bit direct mode addresses on-chip RAM (dir8 = 00:0000H–00:007FH) as both bytes and words, and addresses the SFRs (dir8 = S:080H–S:1FFH) as bytes only. (See the second note in “Data Addressing Modes” on page 5-4 regarding SFRs in the MCS 251 architecture.) The 16-bit direct mode addresses both bytes and words in memory (dir16 = 00:0000H–00:FFFFH).
- MCS 51 architecture. The 8-bit direct mode addresses 256 bytes of on-chip RAM (dir8 = 00H–7FH) as bytes only and the SFRs (dir8 = 80H–FFH) as bytes only.

Table 5-3. Addressing Modes for Data Instructions in the MCS® 51 Architecture

Mode	Address Range of Operand	Assembly Language Reference	Comments
Register	00H–1FH	R0–R7 (Bank selected by PSW)	
Immediate	Operand in Instruction	#data = #00H–#FFH	
Direct	00H–7FH	dir8 = 00H–7FH	On-chip RAM
	SFRs	dir8 = 80H–FFH or SFR mnemonic.	SFR address

Table 5-3. Addressing Modes for Data Instructions in the MCS® 51

Mode	Address Range of Operand	Assembly Language Reference	Comments
Indirect	00H–FFH	@R0, @R1	Accesses on-chip RAM or the lowest 256 bytes of external data memory (MOVX).
	0000H–FFFFH	@DPTR, @A+DPTR	Accesses external data memory (MOVX).
	0000H–FFFFH	@A+DPTR, @A+PC	Accesses region FF: of code memory (MOVC).

5.3.1.4 Indirect

In arithmetic and logical instructions that use indirect addressing, the source operand is always a byte, and the destination is either the accumulator or a byte register (R0–R15). The source address is a byte, word, or dword. The two architectures do indirect addressing via different registers:

- MCS 251 architecture. Memory is indirectly addressed via word and dword registers:
  - Word register (@WRj, j = 0, 2, 4, ..., 30). The 16-bit address in WRj can access locations 00:0000H–00:FFFFH.
  - Dword register (@DRk, k = 0, 4, 8, ..., 28, 56, and 60). The 24 least significant bits can access the entire 16-Mbyte address space. The upper eight bits of DRk must be 0. (If you use DR60 as a general data pointer, be aware that DR60 is the extended stack pointer register SPX.)
- MCS 51 architecture. Instructions use indirect addressing to access on-chip RAM, code memory, and external data RAM. (See the second note in "Data Addressing Modes" on page 5-4 regarding the region of external data RAM that is addressed by instructions in the MCS 51 architecture.)
  - Byte register (@Ri, i = 1, 2). Registers R0 and R1 indirectly address on-chip memory locations 00H–FFH and the lowest 256 bytes of external data RAM.
  - 16-bit data pointer (@DPTR or @A+DPTR). The MOVC and MOVX instructions use these indirect modes to access code memory and external data RAM.
  - 16-bit program counter (@A+PC). The MOVC instruction uses this indirect mode to access code memory.

Table 5-4. Addressing Modes for Data Instructions in the MCS 251 Architecture

Mode	Address Range of Operand	Assembly Language Notation	Comments
Register	00:0000H–00:001FH (R0–R7, WR0–WR3, DR0, DR2) (1)	R0–R15, WR0–WR30, DR0–DR28, DR56, DR60	R0–R7, WR0–WR6, DR0, and DR2 are in the register bank currently selected by the PSW and PSW1.
Immediate, 2 bits	N.A. (Operand is in the instruction)	#short = 1, 2, or 4	Used only in increment and decrement instructions.
Immediate, 8 bits	N.A. (Operand is in the instruction)	#data8 = #00H–#FFH	
Immediate, 16 bits	N.A. (Operand is in the instruction)	#data16 = #0000H–#FFFFH	
Direct, 8 address bits	00:0000H–00:007FH	dir8 = 00:0000H–00:007FH	On-chip RAM
	SFRs	dir8 = S:080H–S:1FFH (2) or SFR mnemonic	SFR address
Direct, 16 address bits	00:0000H–00:FFFFH	dir16 = 00:0000H–00:FFFFH	
Indirect, 16 address bits	00:0000H–00:FFFFH	@WR0–@WR30	
Indirect, 24 address bits	00:0000H–FF:FFFFH	@DR0–@DR30, @DR56, @DR60	Upper 8 bits of DRk must be 00H.
Displacement, 16 address bits	00:0000H–00:FFFFH	@WRj + dis16 = @WR0 + 0H through @WR30 + FFFFH	Offset is signed; address wraps around in region 00:.
Displacement, 24 address bits	00:0000H–FF:FFFFH	@DRk + dis24 = @DR0 + 0H through @DR28 + FFFFH, @DR56 + (0H–FFFFH), @DR60 + (0H–FFFFH)	Offset is signed, upper 8 bits of DRk must be 00H.

NOTES:
1. These registers are accessible in the memory space as well as in the register file (see "8X930Ax Register File" on page 3-9).
2. The MCS 251 architecture supports SFRs in locations S:000H–S:1FFH; however, in the 8X930A*x* all SFRs are in the range S:080H–S:0FFH.

5.3.1.5 Displacement

Several move instructions use displacement addressing to move bytes or words from a source to a destination. Sixteen-bit displacement addressing (@WRj+dis16) accesses indirectly the lowest 64 Kbytes in memory. The base address can be in any word register WRj. The instruction contains a 16-bit signed offset which is added to the base address. Only the lowest 16 bits of the sum are used to compute the operand address. If the sum of the base address and a positive offset exceeds FFFFH, the computed address wraps around within region 00: (e.g. F000H + 2005H becomes

1005H). Similarly, if the sum of the base address and a negative offset is less than zero, the computed address wraps around the top of region 00: (e.g., 2005H + F000H becomes 1005H).

Twenty-four-bit displacement addressing (@DRk+dis24) accesses indirectly the entire 16-Mbyte address space. The base address must be in DR0, DR4, ..., DR24, DR28, DR56, or DR60. The upper byte in the dword register must be zero. The instruction contains a 16-bit signed offset which is added to the base address.

5.3.2 Arithmetic Instructions

The set of arithmetic instructions is greatly expanded in the MCS 251 architecture. The ADD and SUB instructions (Table A-19 on page A-14) operate on byte and word data that is accessed in several ways:

- as the contents of the accumulator, a byte register (Rn), or a word register (WRj)
- in the instruction itself (immediate data)
- in memory via direct or indirect addressing

The ADDC and SUBB instructions (Table A-19) are the same as those for MCS 51 microcontrollers.

The CMP (compare) instruction (Table A-20 on page A-15) calculates the difference of two bytes or words and then writes to flags CY, OV, AC, N, and Z in the PSW and PSW1 registers. The difference is not stored. The operands can be addressed in a variety of modes. The most frequent use of CMP is to compare data or addresses preceding a conditional jump instruction.

Table A-21 on page A-15 lists the INC (increment) and DEC (decrement) instructions. The instructions for MCS 51 microcontrollers are supplemented by instructions that can address byte, word, and dword registers and increment or decrement them by 1, 2, or 4 (denoted by #short). These instructions are supplied primarily for register-based address pointers and loop counters.

The 8X930A*x* architecture provides the MUL (multiply) and DIV (divide) instructions for unsigned 8-bit and 16-bit data (Table A-22 on page A-16). Signed multiply and divide are left for the user to manage through a conversion process. The following operations are implemented:

- eight-bit multiplication: 8 bits $\times$ 8 bits $\rightarrow$ 16 bits
- sixteen-bit multiplication: 16 bits $\times$ 16 bits $\rightarrow$ 32 bits
- eight-bit division: 8 bits $\div$ 8 bits $\rightarrow$ 16 bits (8-bit quotient, 8-bit remainder)
- sixteen-bit division: 16 bits $\div$ 16 bits $\rightarrow$ 32 bits (16-bit quotient, 16-bit remainder)

These instructions operate on pairs of byte registers (Rmd,Rms), word registers (WRjd,WRjs), or the accumulator and B register (A,B). For 8-bit register multiplies, the result is stored in the word register that contains the first operand register. For example, the product from an instruction MUL R3,R8 is stored in WR2. Similarly, for 16-bit multiplies, the result is stored in the dword register that contains the first operand register. For example, the product from the instruction MUL WR6,WR18 is stored in DR4.

For 8-bit divides, the operands are byte registers. The result is stored in the word register that contains the first operand register. The quotient is stored in the lower byte, and the remainder is stored in the higher byte. A 16-bit divide is similar. The first operand is a word register, and the result is stored in the double word register that contains that word register. If the second operand (the divisor) is zero, the overflow flag (OV) is set and the other bits in PSW and PSW1 are meaningless.

5.3.3 Logical Instructions

The 8X930A*x* architecture provides a set of instructions that perform logical operations. The ANL, ORL, and XRL (logical AND, logical OR, and logical exclusive OR) instructions operate on bytes and words that are accessed via several addressing modes (Table A-23 on page A-17). A byte register, word register, or the accumulator can be logically combined with a register, immediate data, or data that is addressed directly or indirectly. These instructions affect the Z and N flags.

In addition to the CLR (clear), CPL (complement), SWAP (swap), and four rotate instructions that operate on the accumulator, 8X930A*x* microcontroller has three shift commands for byte and word registers:

- SLL (Shift Left Logical) shifts the register one bit left and replaces the LSB with 0
- SRL (Shift Right Logical) shifts the register one bit right and replaces the MSB with 0
- SRA (Shift Right Arithmetic) shifts the register one bit right; the MSB is unchanged

5.3.4 Data Transfer Instructions

Data transfer instructions copy data from one register or memory location to another. These instructions include the move instructions (Table A-24 on page A-19) and the exchange, push, and pop instructions (Table A-25 on page A-22). Instructions that move only a single bit are listed with the other bit instructions in Table A-26 on page A-23.

MOV (Move) is the most versatile instruction, and its addressing modes are expanded in the 8X930A*x* architecture. MOV can transfer a byte, word, or dword between any two registers or between a register and any location in the address space.

The MOVX (Move External) instruction moves a byte from external memory to the accumulator or from the accumulator to memory. The external memory is in the region specified by DPXL, whose reset value is 01H (see “Dedicated Registers” on page 3-12).

The MOVC (Move Code) instruction moves a byte from code memory (region FF:) to the accumulator.

MOVS (Move with Sign Extension) and MOVZ (Move with Zero Extension) move the contents of an 8-bit register to the lower byte of a 16-bit register. The upper byte is filled with the sign bit (MOVS) or zeros (MOVZ). The MOVH (Move to High Word) instruction places 16-bit immediate data into the high word of a dword register.

The XCH (Exchange) instruction interchanges the contents of the accumulator with a register or memory location. The XCHD (Exchange Digit) instruction interchanges the lower nibble of the

accumulator with the lower nibble of a byte in on-chip RAM. XCHD is useful for BCD (binary coded decimal) operations.

The PUSH and POP instructions facilitate storing information (PUSH) and then retrieving it (POP) in reverse order. Push can push a byte, a word, or a dword onto the stack, using the immediate, direct, or register addressing modes. POP can pop a byte or a word from the stack to a register or to memory.

5.4 BIT INSTRUCTIONS

A bit instruction addresses a specific bit in a memory location or SFR. There are four categories of bit instructions:

- **SETB (Set Bit), CLR (Clear Bit), CPL (Complement Bit)**. These instructions can set, clear or complement any addressable bit.
- **ANL (And Logical), ANL/ (And Logical Complement), ORL (OR Logical), ORL/ (Or Logical Complement).** These instructions allow ANDing and ORing of any addressable bit or its complement with the CY flag.
- **MOV (Move)** instructions transfer any addressable bit to the carry (CY) bit or vice versa.
- Bit-conditional jump instructions execute a jump if the bit has a specified state. The bit-conditional jump instructions are classified with the control instructions and are described in "Conditional Jumps" on page 5-13.

5.4.1 Bit Addressing

The bits that can be individually addressed are in the on-chip RAM and the SFRs (Table 5-5). The bit instructions that are unique to the MCS 251 architecture can address a wider range of bits than the instructions from the MCS 51 architecture.

There are some differences in the way the instructions from the two architectures address bits. In the MCS 51 architecture, a bit (denoted by bit51) can be specified in terms of its location within a certain register, or it can be specified by a bit address in the range 00H–7FH. The 8X930A*x* architecture does not have bit addresses as such. A bit can be addressed by name or by its location within a certain register, but not by a bit address.

Table 5-6 illustrates bit addressing in the two architectures by using two sample bits:

- RAMBIT is bit 5 in RAMREG, which is location 23H. "RAMBIT" and "RAMREG" are assumed to be defined in user code.
- IT1 is bit 2 in TCON, which is an SFR at location 88H.

Table 5-5. Bit-addressable Locations

Architecture	Bit-addressable Locations	
	On-chip RAM	SFRs
MCS® 251 Architecture	20H–7FH	All defined SFRs
MCS 51 Architecture	20H–2FH	SFRs with addresses ending in 0H or 8H: 80H, 88H, 90H, 98H, ..., F8H

Table 5-7 lists the addressing modes for bit instructions and Table A-26 on page A-23 summarizes the bit instructions. “Bit” denotes a bit that is addressed by an instruction in the MCS 251 architecture and “bit51” denotes a bit that is addressed by an instruction in the MCS 51 architecture.

Table 5-6. Addressing Two Sample Bits

Location	Addressing Mode	MCS® 51 Architecture	MCS 251 Architecture
On-chip RAM	Register Name	RAMREG.5	RAMREG.5
	Register Address	23H.5	23H.5
	Bit Name	RAMBIT	RAMBIT
	Bit Address	1DH	NA
SFR	Register Name	TCON.2	TCON.2
	Register Address	88.2H	S:88.2H
	Bit Name	IT1	IT1
	Bit Address	8A	NA

Table 5-7. Addressing Modes for Bit Instructions

Architecture	Variants	Bit Address	Memory/SFR Address	Comments
MCS® 251 Architecture (bit)	Memory	NA	20H.0–7FH.7	
	SFR	NA	All defined SFRs	
MCS 51 Architecture (bit51)	Memory	00H–7FH	20H.0–7FH.7	
	SFR	80H–F8H	XXH.0–XXH.7, where XX = 80, 88, 90, 98, ..., F0, F8.	SFRs are not defined at all bit-addressable locations.

5.5 CONTROL INSTRUCTIONS

Control instructions—instructions that change program flow—include calls, returns, and conditional and unconditional jumps (see Table A-27 on page A-24). Instead of executing the next instruction in the queue, the processor executes a target instruction. The control instruction provides

the address of a target instruction either implicitly, as in a return from a subroutine, or explicitly, in the form of a relative, direct, or indirect address.

The 8X930A*x* has a 24-bit program counter (PC), which allows a target instruction to be anywhere in the 16-Mbyte address space. However, as discussed in this section, some control instructions restrict the target address to the current 2-Kbyte or 64-Kbyte address range by allowing only the lowest 11 or lowest 16 bits of the program counter to change.

5.5.1 Addressing Modes for Control Instructions

Table 5-8 lists the addressing modes for the control instructions.

- Relative addressing: The control instruction provides the target address as an 8-bit signed offset (rel) from the address of the next instruction.
- Direct addressing: The control instruction provides a target address, which can have 11 bits (addr11), 16 bits (addr16), or 24 bits (addr24). The target address is written to the PC.
  - — addr11: Only the lower 11 bits of the PC are changed; i.e., the target address must be in the current 2-Kbyte block (the 2-Kbyte block that includes the first byte of the next instruction).
  - — addr16: Only the lower 16 bits of the PC are changed; i.e., the target address must be in the current 64-Kbyte region (the 64-Kbyte region that includes the first byte of the next instruction).
  - — addr24: The target address can be anywhere in the 16-Mbyte address space.
- Indirect addressing: There are two types of indirect addressing for control instructions:
  - — For the instructions LCALL @WRj and LJMP @WRj, the target address is in the current 64-Kbyte region. The 16-bit address in WRj is placed in the lower 16 bits of the PC. The upper eight bits of the PC remain unchanged from the address of the next instruction.
  - — For the instruction JMP @A+DPTR, the sum of the accumulator and DPTR is placed in the lower 16 bits of the PC, and the upper eight bits of the PC are FF:, which restricts the target address to the code memory space of the MCS 51 architecture.

Table 5-8. Addressing Modes for Control Instructions

Description	Address Bits Provided	Address Range
Relative, 8-bit relative address (rel)	8	-128 to +127 from first byte of next instruction
Direct, 11-bit target address (addr11)	11	Current 2 Kbytes
Direct, 16-bit target address (addr16)	16	Current 64 Kbytes
Direct, 24-bit target address (addr24)†	24	00:0000H–FF:FFFFH
Indirect (@WRj)†	16	Current 64 Kbytes
Indirect (@A+DPTR)	16	64-Kbyte region specified by DPXL (reset value = 01H)

†These modes are not used by instructions in the MCS® 51 architecture.

5.5.2 Conditional Jumps

The 8X930A*x* architecture supports bit-conditional jumps, compare-conditional jumps, and jumps based on the value of the accumulator. A bit-conditional jump is based on the state of a bit. In a compare-conditional jump, the jump is based on a comparison of two operands. All conditional jumps are relative, and the target address (rel) must be in the current 256-byte block of code. The instruction set includes three kinds of bit-conditional jumps:

- JB (Jump on Bit): Jump if the bit is set.
- JNB (Jump on Not Bit): Jump if the bit is clear.
- JBC (Jump on Bit then Clear it): Jump if the bit is set; then clear it.

"Bit Addressing" on page 5-10 describes the bit addressing used in these instructions.

Compare-conditional jumps test a condition resulting from a compare (CMP) instruction that is assumed to precede the jump instruction. The jump instruction examines the PSW and PSW1 registers and interprets their flags as though they were set or cleared by a compare (CMP) instruction. Actually, the state of each flag is determined by the last instruction that could have affected that flag.

The condition flags are used to test one of the following six relations between the operands:

- equal (=), not equal (≠)
- greater than (>), less than (<)
- greater than or equal (≥), less than or equal (≤)

For each relation there are two instructions, one for signed operands and one for unsigned operands (Table 5-9).

Table 5-9. Compare-conditional Jump Instructions

Operand Type	Relation					
	=	≠	>	<	Š	£
Unsigned	JE	JNE	JG	JL	JGE	JLE
Signed			JSG	JSL	JSGE	JSLE

5.5.3 Unconditional Jumps

There are five unconditional jumps. NOP and SJMP jump to addresses relative to the program counter. AJMP, LJMP, and EJMP jump to direct or indirect addresses.

- NOP (No Operation) is an unconditional jump to the next instruction.
- SJMP (Short Jump) jumps to any instruction within -128 to 127 of the next instruction.
- AJMP (Absolute Jump) changes the lowest 11 bits of the PC to jump anywhere within the current 2-Kbyte block of memory. The address can be direct or indirect.
- LJMP (Long Jump) changes the lowest 16 bits of the PC to jump anywhere within the current 64-Kbyte region.
- EJMP (Extended Jump) changes all 24 bits of the PC to jump anywhere in the 16-Mbyte address space. The address can be direct or indirect.

5.5.4 Calls and Returns

The 8X930A*x* architecture provides relative, direct, and indirect calls and returns.

ACALL (Absolute Call) pushes the lower 16 bits of the next instruction address onto the stack and then changes the lower 11 bits of the PC to the 11-bit address specified by the instruction. The call is to an address that is in the same 2-Kbyte block of memory as the address of the next instruction.

LCALL (Long Call) pushes the lower 16 bits of the next-instruction address onto the stack and then changes the lower 16 bits of the PC to the 16-bit address specified by the instruction. The call is to an address in the same 64-Kbyte block of memory as the address of the next instruction.

ECALL (Extended Call) pushes the 24 bits of the next instruction address onto the stack and then changes the 24 bits of the PC to the 24-bit address specified by the instruction. The call is to an address anywhere in the 16-Mbyte memory space.

RET (Return) pops the top two bytes from the stack to return to the instruction following a subroutine call. The return address must be in the same 64-Kbyte region.

ERET (Extended Return) pops the top three bytes from the stack to return to the address following a subroutine call. The return address can be anywhere in the 16-Mbyte address space.

RETI (Return from Interrupt) provides a return from an interrupt service routine. The operation of RETI depends on the INTR bit in the UCONFIG1 or CONFIG1 configuration byte:

- For INTR = 0, an interrupt pushes the two lower bytes of the PC onto the stack in the following order: PC.7:0, PC.15:8. The RETI instruction pops these two bytes and uses them as the 16-bit return address in region FF:. RETI also restores the interrupt logic to accept additional interrupts at the same priority level as the one just processed.
- For INTR = 1, an interrupt pushes the three PC bytes and PSW1 onto the stack in the following order: PSW1, PC.23:16, PC.7:0, PC.15:8. The RETI instruction pops these four bytes and then returns to the specified 24-bit address, which can be anywhere in the 16-Mbyte address space. RETI also clears the interrupt request line. (See the note in Table 5-8 regarding compatibility with code written for MCS 51 microcontrollers.)

The TRAP instruction is useful for the development of emulations of an 8X930A*x* microcontroller.

5.6 PROGRAM STATUS WORDS

The Program Status Word (PSW) register (Figure 5-2) and the Program Status Word 1 (PSW1) register (Figure 5-3) contain four types of bits:

- CY, AC, OV, N, and Z are flags set by hardware to indicate the result of an operation.
- The P bit indicates the parity of the accumulator.
- Bits RS0 and RS1 are programmed by software to select the active register bank for registers R0–R7.
- F0 and UD are available to the user as general-purpose flags.

The PSW and PSW1 registers are read/write registers; however, the parity bit in the PSW is not affected by a write. Individual bits can be addressed with the bit instructions (see “Bit Addressing” on page 5-10). The PSW and PSW1 bits are used implicitly in the conditional jump instructions (see “Conditional Jumps” on page 5-13).

The PSW register is identical to the PSW register in MCS 51 microcontrollers. The PSW1 register exists only in MCS 251 microcontrollers. Bits CY, AC, RS0, RS1, and OV in PSW1 are identical to the corresponding bits in PSW; i.e., the same bit can be accessed in either register. Table 5-10 lists the instructions that affect the CY, AC, OV, N, and Z bits.

Table 5-10. The Effects of Instructions on the PSW and PSW1 Flags

Instruction Type	Instruction	Flags Affected (1), (5)				
		CY	OV	AC (2)	N	Z
Arithmetic	ADD, ADDC, SUB, SUBB, CMP	X	X	X	X	X
	INC, DEC				X	X
	MUL, DIV (3)	0	X		X	X
	DA	X			X	X
Logical	ANL, ORL, XRL, CLR A, CPL A, RL, RR, SWAP				X	X
	RLC, RRC, SRL, SLL, SRA (4)	X			X	X
Program Control	CJNE	X			X	X
	DJNE				X	X

NOTES:
1. X = the flag can be affected by the instruction.
   0 = the flag is cleared by the instruction.
2. The AC flag is affected only by operations on 8-bit operands.
3. If the divisor is zero, the OV flag is set, and the other bits are meaningless.
4. For SRL, SLL, and SRA instructions, the last bit shifted out is stored in the CY bit.
5. The parity bit (PSW.0) is set or cleared by instructions that change the contents of the accumulator (ACC, Register R11).

PSW

Address: S:D0H
Reset State: 0000 0000B

7							0
CY	AC	F0	RS1	RS0	OV	UD	P

Bit Number	Bit Mnemonic	Function
7	CY	Carry Flag: The carry flag is set by an addition instruction (ADD, ADDC) if there is a carry out of the MSB. It is set by a subtraction (SUB, SUBB) or compare (CMP) if a borrow is needed for the MSB. The carry flag is also affected by logical bit, bit move, multiply, decimal adjust, and some rotate and shift instructions (see Table 5-10).
6	AC	Auxiliary Carry Flag: The auxiliary carry flag is affected only by instructions that address 8-bit operands. The AC flag is set if an arithmetic instruction with an 8-bit operand produces a carry out of bit 3 (from addition) or a borrow into bit 3 (from subtraction). Otherwise, it is cleared. This flag is useful for BCD arithmetic (see Table 5-10).
5	F0	Flag 0: This general-purpose flag is available to the user.
4:3	RS1:0	Register Bank Select Bits 1 and 0: These bits select the memory locations that comprise the active bank of the register file (registers R0–R7). RS1 RS0 Bank Address 0 0 0 00H–07H 0 1 1 08H–0FH 1 0 2 10H–17H 1 1 3 18H–1FH
2	OV	Overflow Flag: This bit is set if an addition or subtraction of signed variables results in an overflow error (i.e., if the magnitude of the sum or difference is too great for the seven LSBs in 2's-complement representation). The overflow flag is also set if a multiplication product overflows one byte or if a division by zero is attempted.
1	UD	User-definable Flag: This general-purpose flag is available to the user.
0	P	Parity Bit: This bit indicates the parity of the accumulator. It is set if an odd number of bits in the accumulator are set. Otherwise, it is cleared. Not all instructions update the parity bit. The parity bit is set or cleared by instructions that change the contents of the accumulator (ACC, Register R11).

Figure 5-2. Program Status Word Register

PSW1

Address: S:D1H
Reset State: 0000 0000B

7							0
CY	AC	N	RS1	RS0	OV	Z	—

Bit Number	Bit Mnemonic	Function
7	CY	Carry Flag: Identical to the CY bit in the PSW register.
6	AC	Auxiliary Carry Flag: Identical to the AC bit in the PSW register.
5	N	Negative Flag: This bit is set if the result of the last logical or arithmetic operation was negative (i.e., bit 15 = 1). Otherwise it is cleared.
4–3	RS1:0	Register Bank Select Bits 0 and 1: Identical to the RS1:0 bits in the PSW register.
2	OV	Overflow Flag: Identical to the OV bit in the PSW register.
1	Z	Zero Flag: This flag is set if the result of the last logical or arithmetic operation is zero. Otherwise it is cleared.
0	—	Reserved: The value read from this bit is indeterminate. Write a zero to this bit.

Figure 5-3. Program Status Word 1 Register

6

Interrupt System

CHAPTER 6
INTERRUPT SYSTEM

6.1 OVERVIEW

The 8X930A*x*, like other control-oriented microcontroller architectures†, employs a program interrupt method. This operation branches to a subroutine and performs some service in response to the interrupt. When the subroutine completes, execution resumes at the point where the interrupt occurred. Interrupts may occur as a result of internal 8X930A*x* activity (e.g., timer overflow) or at the initiation of electrical signals external to the microcontroller (e.g., serial port communication). In all cases, interrupt operation is programmed by the system designer, who determines priority of interrupt service relative to normal code execution and other interrupt service routines. Ten of the eleven interrupts are enabled or disabled by the system designer and may be manipulated dynamically.

A typical interrupt event chain occurs as follows. An internal or external device initiates an interrupt-request signal. This signal, connected to an input pin (see Table 6-1) and periodically sampled by the 8X930A*x*, latches the event into a flag buffer. The priority of the flag (see Table 6-2) is compared to the priority of other interrupts by the interrupt handler. A high priority causes the handler to set an interrupt flag. This signals the instruction execution unit to execute a context switch. This context switch breaks the current flow of instruction sequences. The execution unit completes the current instruction prior to a save of the program counter (PC) and reloads the PC with the start address of a software service routine. The software service routine executes assigned tasks and as a final activity performs a RETI (return from interrupt) instruction. This instruction signals completion of the interrupt, resets the interrupt-in-progress priority, and reloads the program counter. Program operation then continues from the original point of interruption.

Table 6-1. Interrupt System Input Signals

Signal Name	Type	Description	Multiplexed With
INT1:0#	I	**External Interrupts 0 and 1.** These inputs set bits IE1:0 in the TCON register. If bits IT1:0 in the TCON register are set, bits IE1:0 are controlled by a negative-edge trigger on INT1#/INT0#. If bits INT1:0# are clear, bits IE1:0 are controlled by a low level trigger on INT1:0#.	P3.3:2

NOTE: Other signals are defined in their respective chapters and in Appendix B, “Signal Descriptions.”

† A non-maskable interrupt (NMI#) is not included on the 8X930A*x*.

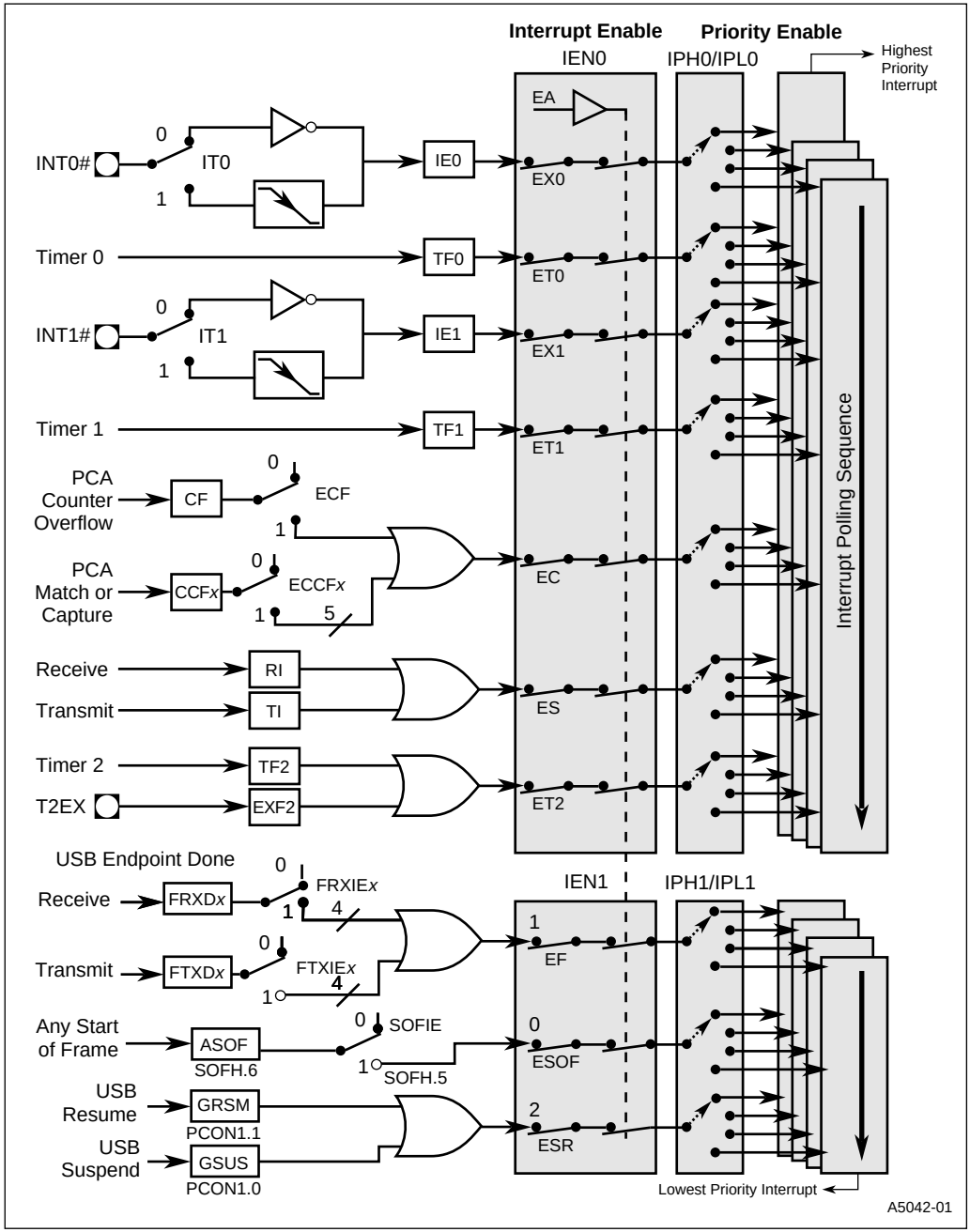

Figure 6-1. Interrupt Control System

Table 6-2. Interrupt System Special Function Registers

Mnemonic	Description	Address
FIE	**USB Function Interrupt Enable Register.** Enables and disables the receive and transmit done interrupts for the four function endpoints.	S:A2H
FIFLG	**USB Function Interrupt Flag Register.** Contains the USB Function's Transmit and Receive Done interrupt flags for non-isochronous endpoints.	S:C0H
IEN0	**Interrupt Enable Register 0.** Enables individual programmable interrupts. Also provides a global enable for the programmable interrupts. The reset value for this register is zero (interrupts disabled).	S:A8H
IEN1	**Interrupt Enable Register1**. Enables individual programmable interrupts for the USB interrupts. The reset value of this register is zero (interrupts disabled).	S:B1H
IPL0	**Interrupt Priority Low Register 0**. Establishes relative priority for programmable interrupts. Used in conjunction with IPH0.	S:B8H
IPH0	**Interrupt Priority High Register 0**. Establishes relative priority for programmable interrupts. Used in conjunction with IPL0.	S:B7H
IPL1	**Interrupt Priority Low Register 1.** Establishes relative priority for programmable interrupts. Used in conjunction with IPH1.	S:B2H
IPH1	**Interrupt Priority High Register 1.** Establishes relative priority for programmable interrupts. Used in conjunction with IPL1.	S:B3H

NOTE: Other SFRs are described in their respective chapters and in Appendix C, "Registers."

6.2 8X930A*x* INTERRUPT SOURCES

Figure 6-1 illustrates the interrupt control system. The 8X930A*x* has eleven interrupt sources; ten maskable sources and the TRAP instruction (always enabled). The maskable sources include two external interrupts (INT0# and INT1#), three timer interrupts (timers 0, 1, and 2), one programmable counter array (PCA) interrupt, one serial port interrupt, and three USB interrupts. Each interrupt (except TRAP) has an interrupt request flag, which can be set by software as well as by hardware (see Table 6-3). For some interrupts, hardware clears the request flag when it grants an interrupt. Software can clear any request flag to cancel an impending interrupt.

6.2.1 External Interrupts

External interrupts INT0# and INT1# (INT*x*#) pins may each be programmed to be level-triggered or edge-triggered, dependent upon bits IT0 and IT1 in the TCON register (see Figure 10-6 on page 10-9). If IT*x* = 0, INT*x*# is triggered by a detected low at the pin. If IT*x* = 1, INT*x*# is negative-edge triggered. External interrupts are enabled with bits EX0 and EX1 (EX*x*) in the IEN0 register (see Figure 6-4). Events on the external interrupt pins set the interrupt request flags IE*x* in TCON. These request bits are cleared by hardware vectors to service routines only if the interrupt is negative-edge triggered. If the interrupt is level-triggered, the interrupt service routine must clear the request bit. External hardware must deassert INTx# before the service routine completes, or an additional interrupt is requested. External interrupt pins must be deasserted for at least four state times prior to a request.

External interrupt pins are sampled once every four state times (a frame length of 666.4 ns at 12 MHz). A level-triggered interrupt pin held low or high for any five-state time period guarantees detection. Edge-triggered external interrupts must hold the request pin low for at least five state times. This ensures edge recognition and sets interrupt request bit EX*x*. The CPU clears EX*x* automatically during service routine fetch cycles for edge-triggered interrupts.

Table 6-3. Interrupt Control Matrix

Interrupt Name†	Global Enable	PCA	Timer 2	Serial Port	Timer 1	INT1#	Timer 0	INT0#
Bit Name in IEN0 Register	EA	EC	ET2	ES	ET1	EX1	ET0	EX0
Interrupt Priority-Within-Level (10 = Low Priority, 1 = High Priority)	NA	7	6	5	4	3	2	1
Bit Names in: IPH0 IPL0	 Reserved Reserved	 IPH0.6 IPL0.6	 IPH0.5 IPL0.5	 IPH0.4 IPL0.4	 IPH0.3 IPL0.3	 IPH0.2 IPL0.2	 IPH0.1 IPL0.1	 IPH0.0 IPL0.0
Programmable for Negative-edge Triggered or Level-triggered Detect?	NA	Edge	No	No	No	Yes	No	Yes
Interrupt Request Flag in CCON, T2CON, SCON, or TCON Register	NA	CF, CCF*x*	TF2, EXF2	RI, TI	TF1	IE1	TF0	IE0
Interrupt Request Flag Cleared by Hardware?	No	No	No	No	Yes	Edge Yes, Level No	Yes	Edge Yes, Level No
ISR Vector Address	NA	FF: 0033H	FF: 002BH	FF: 0023H	FF: 001BH	FF: 0013H	FF: 000BH	FF: 0003H

† The 8X930A*x* also contains a TRAP interrupt, not cleared by hardware, with a vector address of FF007BH. For a discussion of TRAP and other interrupt sources, see "8X930Ax Interrupt Sources" on page 6-3.

Additional interrupts specific to USB operation appear in Table 6-4.

Table 6-4. USB Interrupt Control Matrix

Interrupt Name	USB Global Suspend/Resume	USB Function [Non-Isochronous Endpoint]	Any SOF [Isochronous Endpoint]
Bit Name in IEN1 Register	ESR	EF	ESOF
Interrupt Priority-Within-Level (10 = Low Priority, 1 = High Priority)	10	9	8
Bit Names in: IPH1 IPL1	IPH1.2 IPL1.2	IPH1.1 IPL1.1	IPH1.0 IPL1.0
Programmable for Negative-edge Triggered or Level-triggered Detect?	N/A	N/A	N/A
Interrupt Request Flag in PCON1, FIFLG, or SOFH Register	GSUS GRSM	FTXD*x*, FRXD*x* *x*=0,1,2,3	ASOF
Interrupt Request Flag Cleared by Hardware?	No	No	No
ISR Vector Address	FF:0053H	FF:004BH	FF:0043H

6.2.2 Timer Interrupts

Two timer-interrupt request bits TF0 and TF1 (see TCON register, Figure 10-6 on page 10-9) are set by timer overflow (the exception is Timer 0 in Mode 3, see Figure 10-4 on page 10-7). When a timer interrupt is generated, the bit is cleared by an on-chip hardware vector to an interrupt service routine. Timer interrupts are enabled by bits ET0, ET1, and ET2 in the IEN0 register (see Figure 6-4).

Timer 2 interrupts are generated by a logical OR of bits TF2 and EXF2 in register T2CON (see Figure 10-12 on page 10-18). Neither flag is cleared by a hardware vector to a service routine. In fact, the interrupt service routine must determine if TF2 or EXF2 generated the interrupt, and then clear the bit. Timer 2 interrupt is enabled by ET2 in register IEN0.

6.3 PROGRAMMABLE COUNTER ARRAY (PCA) INTERRUPT

The programmable counter array (PCA) interrupt is generated by the logical OR of five event flags (CCF*x*) and the PCA timer overflow flag (CF) in the CCON register (see Figure 11-8 on page 11-14). All PCA interrupts share a common interrupt vector. Bits are not cleared by hardware vectors to service routines. Normally, interrupt service routines resolve interrupt requests and clear flag bits. This allows the user to define the relative priorities of the five PCA interrupts.

The PCA interrupt is enabled by bit EC in the IEN0 register (see Figure 6-1). In addition, the CF flag and each of the CCF*x* flags must also be individually enabled by bits ECF and ECCF*x* in registers CMOD and CCAPM*x*, respectively, for the flag to generate an interrupt (see Figure 11-7 on page 11-13 and Figure 11-9 on page 11-15).

NOTE

CCF*x* refers to five separate bits, one for each PCA module (CCF0, CCF1, CCF2, CCF3, CCF4). CCAPM*x* refers to 5 separate registers, one for each PCA module (CCAPM0, CCAPM1, CCAPM2, CCAPM3, CCAPM4).

6.4 SERIAL PORT INTERRUPT

Serial port interrupts are generated by the logical OR of bits RI and TI in the SCON register (see Figure 12-2 on page 12-5). Neither flag is cleared by a hardware vector to the service routine. The service routine resolves RI or TI interrupt generation and clears the serial port request flag. The serial port interrupt is enabled by bit ES in the IEN0 register (see Figure 6-4).

6.5 USB INTERRUPTS

There are three types of USB interrupts: The USB function interrupt, to control the flow of non-isochronous data; the start of frame interrupt (SOF), to monitor the transfer of isochronous data; and the global suspend/resume interrupt, to allow USB power control. These interrupts are enabled using the IEN1 register. See Table 6-4 and Figure 6-5.

6.5.1 USB Function Interrupt

The USB function generates two types of interrupts to control the transfer of non-isochronous data: the receive done interrupt and the transmit done interrupt. Individual USB Function interrupts are enabled by setting the corresponding bits in the FIE register (Figure 6-2).

NOTE

In order to use any of the USB function interrupts, the EF bit in the IEN1 register must be enabled.

FIE

Address: S:A2H
Reset State: 0000 0000B

7							0
FRXIE3	FTXIE3	FRXIE2	FTXIE2	FRXIE1	FTXIE1	FRXIE0	FTXIE0

Bit Number	Bit Mnemonic	Function
7	FRXIE3	Function Receive Interrupt Enable 3: Enables receive done interrupt for endpoint 3 (FRXD3).
6	FTXIE3	Function Transmit Interrupt Enable 3: Enables transmit done interrupt for endpoint 3 (FTXD3).
5	FRXIE2	Function Receive Interrupt Enable 2: Enables the receive done interrupt for endpoint 2 (FRXD2).
4	FTXIE2	Function Transmit Interrupt Enable 2: Enables the transmit done interrupt for endpoint 2 (FTXD2).
3	FRXIE1	Function Receive Interrupt Enable 1: Enables the receive done interrupt for endpoint 1 (FRXD1).
2	FTXIE1	Function Transmit Interrupt Enable 1: Enables the transmit done interrupt for endpoint 1 (FTXD1).
1	FRXIE0	Function Receive Interrupt Enable 0: Enables the receive done interrupt for endpoint 0 (FRXD0).
0	FTXIE0	Function Transmit Interrupt Enable 0: Enables the transmit done interrupt for endpoint0 (FTXD0).

NOTE: For all bits, a ‘1’ means the interrupt is enabled and will cause an interrupt to be signaled to the microcontroller. A ‘0’ means the associated interrupt source is disabled and cannot cause an interrupt, even though the interrupt bit’s value will still be reflected in the FIFLG register.

Figure 6-2. USB Function Interrupt Enable Register

The USB Function Interrupt Flag Register (FIFLG, as shown in Figure 6-3) is used to indicate pending function interrupts. For all bits in FIFLG, a ‘1’ indicates that an interrupt is actively pending; a ‘0’ indicates that the interrupt is not active. The interrupt status is shown in the FIFLG register regardless of the state of the corresponding interrupt enable bit in the FIE Register (Figure 6-2).

The USB function generates a receive done interrupt for an endpoint *x* (*x* = 0–3) by setting the FRXD*x* bit in the FIFLG register (Figure 6-3). Only non-isochronous transfer can cause a receive done interrupt. Receive done interrupts are generated only when *all* of the following are true:

1. A valid SETUP or OUT token is received to function endpoint *x*, *and*
2. Endpoint *x* is enabled for reception (RXEPEN in EPCON = ‘1’), *and*

3. Receive is enabled (RXIE = '1') and STALL is disabled (RXSTL = '0') for OUT tokens (*or* the token received is a SETUP token), *and*
4. A data packet is received with no time-out — *regardless* of transmission errors (CRC, bit-stuffing) or FIFO errors (overrun, underrun), *and*
5. There is no data sequence PID error.

Because the FRXD*x* bit is set and a receive done interrupt is generated regardless of transmission errors, this condition means either:

1. Valid data is waiting to be serviced in the receive FIFO for function endpoint *x* and that the data was received without error and has been acknowledged; or
2. Data was received with a receive data error and requires firmware intervention to be cleared. This could be either a transmission error or a FIFO-related error. You must check for these conditions and respond accordingly in the interrupt service routine (ISR).

The USB function generates a transmit done interrupt for an endpoint *x* (*x* = 0–3) by setting the FTXD*x* bit in the FIFLG register (Figure 6-3). Only non-isochronous transfer can cause a transmit done interrupt. Transmit done interrupts are generated only when *all* of the following are true:

1. A valid IN token is received to function endpoint *x*, *and*
2. Endpoint *x* is enabled for transmission (TXEPEN = '1'), *and*
3. Transmit is enabled (TXIE = '1') and STALL is disabled (TXSTL = '0'), *and*
4. A data packet/byte count has been loaded in the transmit FIFO and was transmitted in response to the IN token — *regardless* of whether or not a FIFO error occurs, *and*
5. An ACK is received from the host or there was a time-out in the SIE.

Because the FTXD*x* bit is set and a transmit done interrupt is generated regardless of transmission errors, this condition means either:

1. The transmit data has been transmitted and the host has sent an acknowledgment to indicate that is was successfully received; or
2. A transmit data error occurred during transmission of the data packet, which requires servicing by firmware to be cleared. You must check for these conditions and respond accordingly in the ISR.

NOTE

Setting an endpoint interrupt's bit in the Function Interrupt Enable register (FIE register, as shown in Figure 6-2) means that the interrupt is enabled and will cause an interrupt to be signaled to the microcontroller. Clearing a bit in the FIE register disables the associated interrupt source, which can no longer cause an interrupt even though its value will still be reflected in the FIFLG register.

FIFLG

Address: S:C0H
Reset State: 0000 0000B

7							0
FRXD3	FTXD3	FRXD2	FTXD2	FRXD1	FTXD1	FRXD0	FTXD0

Bit Number	Bit Mnemonic	Function
7	FRXD3	Function Receive Done Flag, Endpoint 3
6	FTXD3	Function Transmit Done Flag, Endpoint 3
5	FRXD2	Function Receive Done Flag, Endpoint 2
4	FTXD2	Function Transmit Done Flag, Endpoint 2
3	FRXD1	Function Receive Done Flag, Endpoint 1
2	FTXD1	Function Transmit Done Flag, Endpoint 1
1	FRXD0	Function Receive Done Flag, Endpoint 0
0	FTXD0	Function Transmit Done Flag, Endpoint 0

NOTE: For all bits in the Interrupt Flag Register, a ‘1’ indicates that an interrupt is actively pending; a ‘0’ indicates that the interrupt is not active. The interrupt status is shown regardless of the state of the corresponding interrupt enable bit in the FIE. Bits are set-only by hardware and clearable in software. Software can also set the bits for text purposes, allowing the interrupt to be generated in software.

Figure 6-3. USB Function Interrupt Flag Register

6.5.2 USB Start of Frame Interrupt

The USB start of frame interrupt (SOF) is used to control the transfer of isochronous data. The 8X930A*x* frame timer attempts to synchronize to the frame time automatically. When the frame timer is locked to the USB frame time, hardware sets the FTLOCK bit in SOFH (Figure 7-5 on page 7-12). To enable the start of frame interrupt, set the SOFIE bit in SOFH. The 8X930A*x* generates a SOF interrupt whenever a start of frame packet is received from the USB lines (or whenever an SOF packet should have been received — i.e., an artificial SOF) by setting the ASOF bit in SOFH.

The 8X930A*x* uses the SOF interrupt to signal either of two complementary events:

1. When transmitting: The next isochronous data packet needs to be retrieved from memory and loaded into the transmit FIFO in preparation for transmission in the next frame; or
2. When receiving: An isochronous packet has been received in the previous frame and needs to be retrieved from the receive FIFO.

Since the SOF packet could be corrupted, there is a chance that a new frame could be started without successful reception of the SOF packet. For this reason, an artificial SOF is provided. The frame timer signals a time-out when an SOF packet has not been received within the allotted amount of time. In this fashion, the 8X930A*x* generates an SOF interrupt reliably once each frame

within 1 µs of accuracy, except when this interrupt is suspended or when the frame timer gets out-of-sync with the USB bus frame time.

In summary, in order to utilize the USB start of frame functionality for isochronous data transfer, the following must all be true:

1. The global enable bit must be set (i.e., the EA bit must be set in the IEN0 register)
2. The isochronous endpoint any SOF interrupt must be enabled (the ESOF bit must be set in the IEN1 register)
3. The SOF interrupt must be enabled (the SOFIE bit must be set in the SOFH Register)

NOTE

The SOF interrupt is brought out to an external pin (SOF#) in order to provide a 1 ms pulse, subject to the accuracy of the USB SOF. This pin is enabled by clearing the SOFODIS bit in the SOFH register.

6.5.3 USB Global Suspend/Resume Interrupt

The 8X930A*x* supports USB power control through firmware. The USB power control register (PCON1, as shown in Figure 14-2 on page 14-3) facilitates USB power control of the 8X930A*x*, including global suspend/resume and USB function resume.

6.5.3.1 Global Suspend

When a global suspend is detected by the 8X930A*x*, the global suspend bit (GSUS of PCON1) is set and the GS/Resume interrupt is generated. Global suspend is defined as bus inactivity for more than 3 ms on the USB lines. For additional information, see "Global Suspend Mode" on page 14-6.

6.5.3.2 Global Resume

When a global resume is detected by the 8X930A*x*, the global resume bit (GRSM of PCON1) is set and the Global Suspend/Resume interrupt is generated. As soon as resume signaling is detected on the USB lines, the oscillator is restarted. After executing the resume interrupt service routine, the 8X930A*x* resumes operation from where it was when it was interrupted by the suspend interrupt. For additional information, see "Global Resume Mode" on page 14-8.

6.5.3.3 USB Remote Wake-up

The 8X930A*x* can also initiate resume signaling to the USB lines through remote wakeup of the USB function while it is in powerdown/idle mode. While in powerdown mode, remote wakeup has to be initiated through assertion of an enabled external interrupt. The external interrupt has to be enabled and it must be configured with level trigger and with higher priority than a suspend/resume interrupt. An external interrupt restarts the clocks to the 8X930A*x* and program execution branches to the external interrupt service routine.

Within this external interrupt service routine, you must set the remote wakeup bit (RWU in PCON1) to drive resume signaling on the USB lines to the host or upstream hub. After executing the external ISR, the program continues execution from where it was put into powerdown mode

and the 8X930A*x* resumes normal operation. For additional information, see “USB Remote Wake-up” on page 14-8.

6.6 INTERRUPT ENABLE

Each interrupt source (with the exception of TRAP) may be individually enabled or disabled by the appropriate interrupt enable bit in the IEN0 register at S:A8H (see Figure 6-4) or the IEN1 register at S:B1H (see Figure 6-5). Note IEN0 also contains a global disable bit (EA). If EA is set, interrupts are individually enabled or disabled by bits in IEN0 and IEN1. If EA is clear, all interrupts are disabled.

IEN0

Address: S:A8H
Reset State: 0000 0000B

7							0
EA	EC	ET2	ES	ET1	EX1	ET0	EX0

Bit Number	Bit Mnemonic	Function
7	EA	Global Interrupt Enable: Setting this bit enables all interrupts that are individually enabled by bits 0–6. Clearing this bit disables all interrupts, except the TRAP interrupt, which is always enabled.
6	EC	PCA Interrupt Enable: Setting this bit enables the PCA interrupt.
5	ET2	Timer 2 Overflow Interrupt Enable: Setting this bit enables the timer 2 overflow interrupt.
4	ES	Serial I/O Port Interrupt Enable: Setting this bit enables the serial I/O port interrupt.
3	ET1	Timer 1 Overflow Interrupt Enable: Setting this bit enables the timer 1 overflow interrupt.
2	EX1	External Interrupt 1 Enable: Setting this bit enables external interrupt 1.
1	ET0	Timer 0 Overflow Interrupt Enable: Setting this bit enables the timer 0 overflow interrupt.
0	EX0	External Interrupt 0 Enable: Setting this bit enables external interrupt 0.

Figure 6-4. Interrupt Enable Register 0

IEN1

Address: S:B1H
Reset State: XXXX X000H

7							0
—	—	—	—	—	ESR	EF	ESOF

Bit Number	Bit Mnemonic	Function
7:3	—	Reserved: Values read from these bits are indeterminate. Write zeros to these bits.
2	ESR	Enable Suspend/Resume: USB Global Suspend/Resume Interrupt Enable bit.
1	EF	Enable Function: Transmit/Receive Done interrupt enable bit for non-isochronous USB function endpoints.
0	ESOF	Enable Start of Frame: Any start of frame interrupt enable bit for isochronous endpoints.

Figure 6-5. USB Interrupt Enable Register

6.7 INTERRUPT PRIORITIES

Ten of the eleven 8X930A*x* interrupt sources (TRAP excluded) may be individually programmed to one of four priority levels. This is accomplished with the IPH*X*.*x*/IPL*X*.*x* bit pairs in the interrupt priority high (IPH1/IPH0 in Figure 6-6 and 6-8) and interrupt priority low (IPL1/IPL0) registers (Figures 6-7 and 6-9). Specify the priority level as shown in Table 6-5 using IPH0.*x* (or IPH1.*x*) as the MSB and IPL0.*x* (or IPL1.*x*) as the LSB.

Table 6-5. Level of Priority

Priority Level	IPH1.*x*, IPL1.*x*	IPH0.*x*, IPL0.*x*
0 Lowest Priority	00	00
1	01	01
2	10	10
3 Highest Priority	11	11

A low-priority interrupt is always interrupted by a higher priority interrupt but not by another interrupt of equal or lower priority. The highest priority interrupt is not interrupted by any other interrupt source. Higher priority interrupts are serviced before lower priority interrupts. The response to simultaneous occurrence of equal priority interrupts (i.e., sampled within the same four-state interrupt cycle) is determined by a hardware priority-within-level resolver (see Table 6-6).

Table 6-6. Interrupt Priority Within Level

Priority Number	Interrupt Name
1 (Highest Priority)	INT0#
2	Timer 0
3	INT1#
4	Timer 1
5	Serial Port
6	Timer 2
7	PCA
8	USB Any SOF
9	USB Function
10	USB Global Suspend/Resume

IPH0

Address: S:B7H
Reset State: X000 0000B

7							0
—	IPH0.6	IPH0.5	IPH0.4	IPH0.3	IPH0.2	IPH0.1	IPH0.0

Bit Number	Bit Mnemonic	Function
7	—	Reserved. The value read from this bit is indeterminate. Write a zero to this bit.
6	IPH0.6	PCA Interrupt Priority Bit High
5	IPH0.5	Timer 2 Overflow Interrupt Priority Bit High
4	IPH0.4	Serial I/O Port Interrupt Priority Bit High
3	IPH0.3	Timer 1 Overflow Interrupt Priority Bit High
2	IPH0.2	External Interrupt 1 Priority Bit High
1	IPH0.1	Timer 0 Overflow Interrupt Priority Bit High
0	IPH0.0	External Interrupt 0 Priority Bit High

Figure 6-6. IPH0: Interrupt Priority High Register 0

IPL0

Address: S:B8H
Reset State: X000 0000B

7							0
—	IPL0.6	IPL0.5	IPL0.4	IPL0.3	IPL0.2	IPL0.1	IPL0.0

Bit Number	Bit Mnemonic	Function
7	—	Reserved. The value read from this bit is indeterminate. Write a zero to this bit.
6	IPL0.6	PCA Interrupt Priority Bit Low
5	IPL0.5	Timer 2 Overflow Interrupt Priority Bit Low
4	IPL0.4	Serial I/O Port Interrupt Priority Bit Low
3	IPL0.3	Timer 1 Overflow Interrupt Priority Bit Low
2	IPL0.2	External Interrupt 1 Priority Bit Low
1	IPL0.1	Timer 0 Overflow Interrupt Priority Bit Low
0	IPL0.0	External Interrupt 0 Priority Bit Low

Figure 6-7. IPL0: Interrupt Priority Low Register 0

IPH1

Address: S:B3H
Reset State: X000 0000B

7							0
—	—	—	—	—	IPH1.2	IPH1.1	IPH1.0

Bit Number	Bit Mnemonic	Function
7:3	—	Reserved: Values read from these bits are indeterminate. Write zeros to these bits.
2	IPH1.2	Global Suspend/Resume Interrupt Priority Bit High
1	IPH1.1	USB Function Interrupt Priority Bit High
0	IPH1.0	USB Any SOF Interrupt Priority Bit High

Figure 6-8. IPH1: Interrupt Priority High Register 1

IPL1

Address: S:B2H
Reset State: X000 0000B

7							0
—	—	—	—	—	IPL1.2	IPL1.1	IPL1.0

Bit Number	Bit Mnemonic	Function
7:3	—	Reserved: Values read from these bits are indeterminate. Write zeros to these bits.
2	IPL1.2	Global Suspend/Resume Interrupt Priority Bit Low
1	IPL1.1	USB Function Interrupt Priority Bit Low
0	IPL1.0	USB Any SOF Interrupt Priority Bit Low

Figure 6-9. IPL1: Interrupt Priority Low Register 1

6.8 INTERRUPT PROCESSING

Interrupt processing is a dynamic operation that begins when a source requests an interrupt and lasts until the execution of the first instruction in the interrupt service routine (see Figure 6-10). *Response time* is the amount of time between the interrupt request and the resulting break in the current instruction stream. *Latency* is the amount of time between the interrupt request and the execution of the first instruction in the interrupt service routine. These periods are dynamic due to the presence of both fixed-time sequences and several variable conditions. These conditions contribute to total elapsed time.

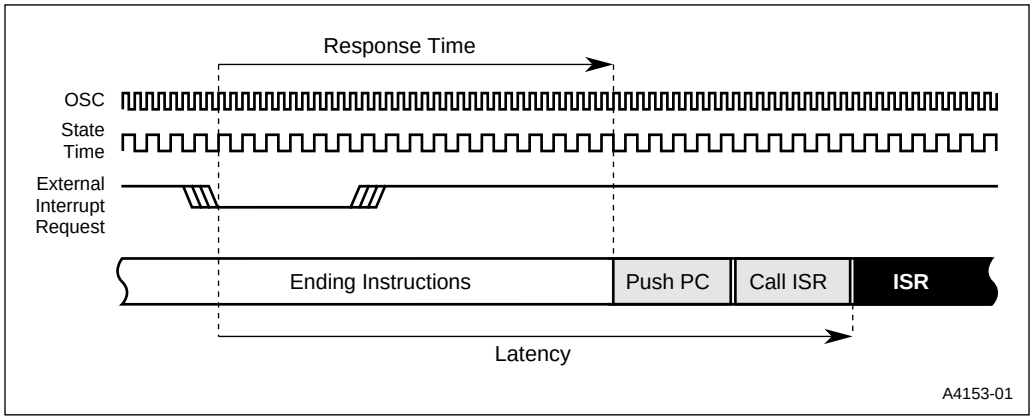

Figure 6-10. The Interrupt Process

Both response time and latency begin with the request. The subsequent minimum fixed sequence comprises the interrupt sample, poll, and request operations. The variables consist of (but are not limited to): specific instructions in use at request time, internal versus external interrupt source requests, internal versus external program operation, stack location, presence of wait states, page-mode operation, and branch pointer length.

NOTE

In the following discussion, external interrupt request pins are assumed to be inactive for at least four state times prior to assertion. In this chapter all external hardware signals maintain some setup period (i.e., less than one state time). Signals must meet V_{IH} and V_{IL} specifications prior to any state time under discussion. This setup state time is not included in examples or calculations for either response or latency.

6.8.1 Minimum Fixed Interrupt Time

All interrupts are sampled or polled every four state-times (see Figure 6-10). Two of eight interrupts are latched and polled per state time within any given window of four state-times. One additional state time is required for a context switch request. For code branches to jump locations in the current 64-Kbyte memory region (compatible with MCS 51 microcontrollers), the context switch time is 11 states. Therefore, the minimum fixed poll and request time is 16 states (4 poll states + 1 request state + 11 states for the context switch = 16 state times).

Therefore, this minimum fixed period rests upon four assumptions:

- The source request is an internal interrupt with high enough priority to take precedence over other potential interrupts,
- The request is coincident with internal execution and needs no instruction completion time,
- The program uses an internal stack location, and
- The ISR is in on-chip ROM.

6.8.2 Variable Interrupt Parameters

Both response time and latency calculations contain fixed and variable components. By definition, it is often difficult to predict exact timing calculations for real-time requests. One large variable is the completion time of an instruction cycle coincident with the occurrence of an interrupt request. Worst-case predictions typically use the longest-executing instruction in an architecture's code set. In the case of the 8X930A*x*, the longest-executing instruction is a 16-bit divide (DIV). However, even this 21- state instruction may have only 1 or 2 remaining states to complete before the interrupt system injects a context switch. This uncertainty affects both response time and latency.

6.8.2.1 Response Time Variables

Response time is defined as the start of a dynamic time period when a source requests an interrupt and lasts until a break in the current instruction execution stream occurs (see Figure 6-10). Response time (and therefore latency) is affected by two primary factors: the incidence of the request relative to the four-state-time sample window and the completion time of instructions in the response period (i.e., shorter instructions complete earlier than longer instructions).

NOTE

External interrupt signals require one additional state time in comparison to internal interrupts. This is necessary to sample and latch the pin value prior to a poll of interrupts. The sample occurs in the first half of the state time and the poll/request occurs in the second half of the next state time. Therefore, this sample and poll/request portion of the minimum fixed response and latency

time is five states for internal interrupts and six states for external interrupts. External interrupts must remain active for at least five state times to guarantee interrupt recognition when the request occurs immediately after a sample has been taken (i.e., requested in the second half of a sample state time).

If the external interrupt goes active one state after the sample state, the pin is not resampled for another three states. After the second sample is taken and the interrupt request is recognized, the interrupt controller requests the context switch. The programmer must also consider the time to complete the instruction at the moment the context switch request is sent to the execution unit. If 9 states of a 10-state instruction have completed when the context switch is requested, the total response time is 6 states, with a context switch immediately after the final state of the 10-state instruction (see Figure 6-11).

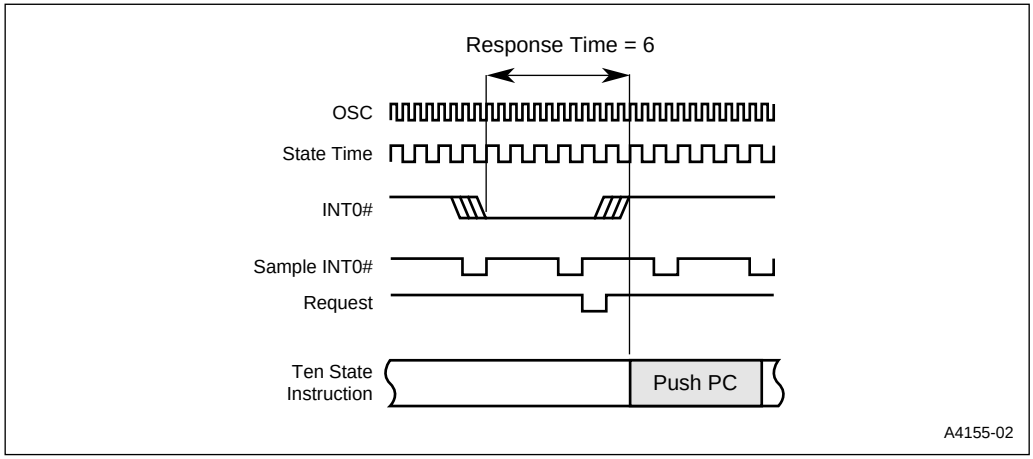

Figure 6-11. Response Time Example #1

Conversely, if the external interrupt requests service in the state just prior to the next sample, response is much quicker. One state asserts the request, one state samples, and one state requests the context switch. If at that point the same instruction conditions exist, one additional state time is needed to complete the 10-state instruction prior to the context switch (see Figure 6-12). The total response time in this case is four state times. The programmer must evaluate all pertinent conditions for accurate predictability.

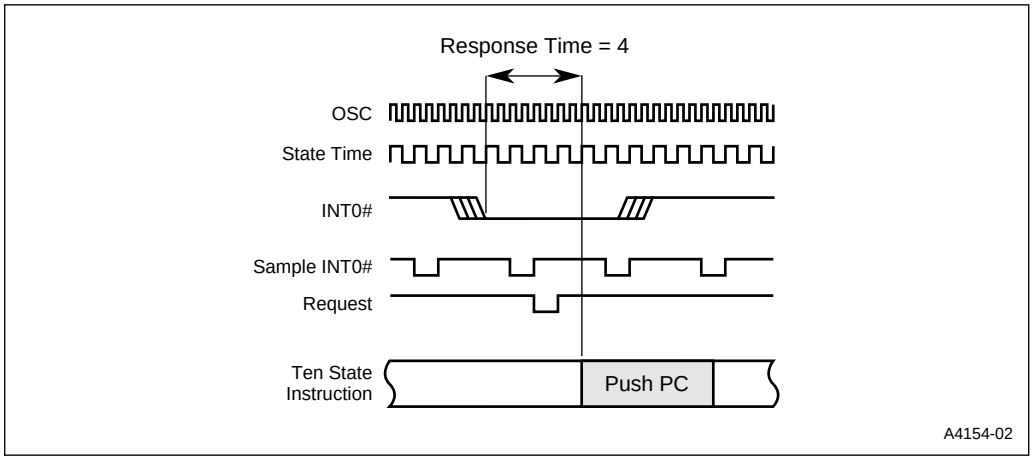

Figure 6-12. Response Time Example #2

6.8.2.2 Computation of Worst-case Latency With Variables

Worst-case latency calculations assume that the longest 8X930A*x* instruction used in the program must fully execute prior to a context switch. The instruction execution time is reduced by one state with the assumption the instruction state overlaps the request state (therefore, 16-bit DIV is 21 state times - 1 = 20 states for latency calculations). The calculations add fixed and variable interrupt times (see Table 6-7) to this instruction time to predict latency. The worst-case latency (both fixed and variable times included) is expressed by a pseudo-formula:

FIXED_TIME + VARIABLES + LONGEST_INSTRUCTION = MAXIMUM LATENCY PREDICTION

Table 6-7. Interrupt Latency Variables

Variable	INT0#, INT1#, T2EX	External Execution	Page Mode	>64K Jump to ISR (1)	External Memory Wait State	External Stack <64K (1)	External Stack >64K (1)	External Stack Wait State
Number of States Added	1	2	1	8	1 per bus cycle	4	8	1 per bus cycle

NOTES:
1. <64K/>64K means inside/outside the 64-Kbyte memory region where code is executing.
2. Base-case fixed time is 16 states and assumes:
   - — A 2-byte instruction is the first ISR byte.
   - — <64K jump to ISR
   - — Internal peripheral interrupt
   - — Internal execution
   - — Internal stack

6.8.2.3 Latency Calculations

Assume the use of a zero-wait-state external memory where current instructions, the ISR, and the stack are located within the same 64-Kbyte memory region (compatible with memory maps for MCS 51 microcontrollers.) Further, assume there are 3 states yet to complete in the current 21-state DIV instruction when INT0# requests service. Also assume INT0# has made the request one state prior to the sample state (as in Figure 6-12). Unlike Figure 6-12, the response time for this assumption is three state times as the current instruction completes in time for the branch to occur. Latency calculations begin with the minimum fixed latency of 16 states. From Table 6-7, one state is added for an INT0# request from external hardware; two states are added for external execution; and four states for an external stack in the current 64-Kbyte region. Finally, three states are added for the current instruction to complete. The actual latency is 26 states. Worst-case latency calculations predict 43 states for this example due to inclusion of total DIV instruction time (less one state).

Table 6-8. Actual vs. Predicted Latency Calculations

Latency Factors	Actual	Predicted
Base Case Minimum Fixed Time	16	16
INT0# External Request	1	1
External Execution	2	2
<64K Byte Stack Location	4	4
Execution Time for Current DIV Instruction	3	20
TOTAL	26	43

6.8.2.4 Blocking Conditions

If all enable and priority requirements have been met, a single prioritized interrupt request at a time generates a vector cycle to an interrupt service routine (see CALL instructions in Appendix A, “Instruction Set Reference”). There are three causes of blocking conditions with hardware-generated vectors:

1. An interrupt of equal or higher priority level is already in progress (defined as any point after the flag has been set and the RETI of the ISR has not executed).
2. The current polling cycle is not the final cycle of the instruction in progress.
3. The instruction in progress is RETI or any write to the IEN0, IEN1, IPH0, IPH1, IPL0 or IPL1 registers.

Any of these conditions blocks calls to interrupt service routines. Condition two ensures the instruction in progress completes before the system vectors to the ISR. Condition three ensures at least one more instruction executes before the system vectors to additional interrupts if the instruction in progress is a RETI or any write to IEN0, IEN1, IPH0, IPH1, IPL0 or IPL1. The complete polling cycle is repeated every four state-times.

6.8.2.5 Interrupt Vector Cycle

When an interrupt vector cycle is initiated, the CPU breaks the instruction stream sequence, resolves all instruction pipeline decisions, and pushes multiple program counter (PC) bytes onto the stack. The CPU then reloads the PC with a start address for the appropriate ISR. The number of bytes pushed to the stack depends upon the INTR bit in the UCONFIG1 (Figure 4-4 on page 4-6) configuration byte. The complete sample, poll, request and context switch vector sequence is illustrated in the interrupt latency timing diagram (Figure 6-10).

NOTE

If the interrupt flag for a level-triggered external interrupt is set but denied for one of the above conditions and is clear when the blocking condition is removed, then the denied interrupt is ignored. In other words, blocked interrupt requests are not buffered for retention.

6.8.3 ISRs in Process

ISR execution proceeds until the RETI instruction is encountered. The RETI instruction informs the processor that the interrupt routine is completed. The RETI instruction in the ISR pops PC address bytes off the stack (as well as PSW1 for INTR = 1) and execution resumes at the suspended instruction stream.

NOTE

Some programs written for MCS 51 microcontrollers use RETI instead of RET to return from a subroutine that is called by ACALL or LCALL (i.e., not an interrupt service routine (ISR)). In the 8X930A*x*, this causes a compatibility problem if INTR = 1 in configuration byte CONFIG1. In this case, the CPU pushes four bytes (the three-byte PC and PSW1) onto the stack when the routine is called and pops the same four bytes when the RETI is executed. In contrast, RET pushes and pops only the lower two bytes of the PC. To maintain compatibility, configure the 8X930A*x* with INTR = 0.

With the exception of TRAP, the start addresses of consecutive interrupt service routines are eight bytes apart. If consecutive interrupts are used (IE0 and TF0, for example, or TF0 and IE1), the first interrupt routine (if more than seven bytes long) must execute a jump to some other memory location. This prevents overlap of the start address of the following interrupt routine.

7

Universal Serial Bus

CHAPTER 7
UNIVERSAL SERIAL BUS

This chapter and Chapter 8, “USB Programming Models,” describe the operation of the 8X930A*x* serving as a USB function. For an overview of the USB module, see Chapter 2, “Introduction.” Table 7-1 lists device signals associated with the USB. Pin assignments are shown in Appendix B.

A data flow model for the USB transactions, intended to bridge the hardware and firmware layers of the 8X930A*x*, is presented in truth table form in Appendix D. The data flow model describes 8X930A*x* behavior in response to a particular USB event, given a known state/configuration.

7.1 USB FUNCTION INTERFACE

The USB function interface manages communications between the USB host and the embedded function. It consists of a serial bus interface engine (SIE), which handles the communication protocol of the universal serial bus, and a function interface unit (FIU), which handles data transfer and provides the interface between the SIE and the 8X930A*x* CPU. These units, along with the differential transceiver and the FIFO data buffers, comprise the USB module. The block diagram in Figure 2-3 on page 2-3 shows the relationships between these components and how they interface with the CPU.

The USB module interfaces with the USB by means of the differential USB root port, D_{P0} and D_{M0}.

7.1.1 Serial Bus Interface Engine (SIE)

The SIE is the universal serial bus protocol interpreter. It serves as the communicator between the 8X930A*x* and the host PC through the USB lines. For additional information on the SIE, see “SIE Details” on page 7-33.

A complete description of the USB can be found in *Universal Serial Bus Specification*. For a description of the transceiver see the “Driver Characteristics” and “Receiver Characteristics” sections of the “Electrical” chapter of the *Universal Serial Bus Specification*. For electrical characteristics and data signal timing, see the “Bus Timing/Electrical Characteristics” and “Timing Diagram” sections of the same chapter.

7.1.2 Function Interface Unit (FIU)

The FIU manages USB data transactions for the 8X930A*x*. It controls the operation of the FIFOs, monitors the status of the data transaction, and at the appropriate moment transfers event control to the CPU through an interrupt request. The exact nature of a data transaction depends on the type of data transfer and the initial conditions of the transmit and receive FIFOs.

The 8X930A*x* supports four types of data transfer: control transfer (endpoint 0), interrupt transfer, isochronous transfer, and bulk transfer. The 8X930A*x* provides a pair of FIFO data buffers — a transmit FIFO and a receive FIFO — dedicated to each endpoint.

Table 7-1. Signal Descriptions

Signal Name	Type	Description	Alternate Function
PLLSEL2:0	I	**Phase Lock Loop Select.** Three-bit code selects the USB data rate (see Table 2-2 on page 2-8).	—
SOF#	O	**Start of Frame.** The SOF# pin is asserted for eight states when an SOF token is received.	—
D_{P0}, D_{M0}	I/O	**USB Port 0**. D_{P0} and D_{M0} are the data plus and data minus lines of differential USB port 0. These lines do not have internal pullup resistors. For low-speed devices, provide an external 1.5 KΩ pullup resistor at D_{M0}. For full-speed devices, provide an external 1.5 KΩ pullup resistor at D_{P0}. NOTE: Either D_{P0} or D_{M0} must be pulled high. Otherwise a continuous SEO (USB reset) will be applied to these inputs causing the 8X930A*x* to stay in reset.	—
ECAP	I	**External Capacitor**. Must be connected to a 0.1µF capacitor (or larger) to ensure proper operation of the differential line driver. The other lead of the capacitor must be connected to V_{SS}.	—

7.1.3 SPECIAL FUNCTION REGISTERS (SFRs)

The FIU controls operations through the use of four sets of special functions registers (SFRs): the FIU SFRs, the transmit FIFO SFRs, the receive FIFO SFRs, and the USB interrupt SFRs. Table 7-2 lists the special function registers (SFRs) described in this chapter. USB interrupt SFRs are described in Chapter 6, "Interrupt System." Table 3-5 on page 3-16 is an address map of all the 8X930A*x* SFRs.

The registers in the FIU SFR set are: EPINDEX, EPCON, TXSTAT, RXSTAT, SOFL, SOFH, and FADDR. These registers are defined in Figures 7-1 through Figure 7-7.

The registers in the transmit FIFO SFR set are TXDAT, TXCON, TXFLG, TXCNTL, and TXCNTH. These registers are defined in Figures 7-10 through 7-13 beginning on page 7-18.

The registers in the receive FIFO SFR set are RXDAT, RXCON, RXFLG, RXCNTL, and RXCNTH. These registers are defined in Figures 7-15 through 7-18 beginning on page 7-27.

The transmit SFR set, the receive SFR set, EPCON, TXSTAT, and RXSTAT are endpoint-indexed, i.e., they are assigned to operate in conjunction with the FIFO pair associated with the selected endpoint.

The endpoint index SFR (EPINDEX) specifies the current endpoint (index value x = 0, 1, 2, 3).

CAUTION

Unless otherwise noted in the bit definition, SFR bits can be read and written by software. All SFRs should be written using *read-modify-write instructions only*, due to the possibility of simultaneous writes by hardware and firmware.

Table 7-2. USB Function SFRs

Mnemonic	Description	Address
EPCON	**Endpoint Control Register.** Configures the operation of the endpoint specified by EPINDEX.	S:E1H
EPINDEX	**Endpoint Index Register.** Selects the appropriate endpoint.	S:F1H
FADDR	**Function Address Register.** Stores the USB function address for the device. The host PC assigns the address and informs the device via endpoint 0.	S:8FH
RXCNTH	**Receive FIFO Byte-Count High Register.** High register in a two-register ring buffer used to store the byte count for the data packets received in the receive FIFO specified by EPINDEX.	S:E7H
RXCNTL	**Receive FIFO Byte-Count Low Register.** Low register in a two-register ring buffer used to store the byte count for the data packets received in the receive FIFO specified by EPINDEX.	S:E6H
RXCON	**Receive FIFO Control Register.** Controls the receive FIFO specified by EPINDEX.	S:E4H
RXDAT	**Receive FIFO Data Register.** Receive FIFO data is read from this register (specified by EPINDEX).	S:E3H
RXFLG	**Receive FIFO Flag Register.** These flags indicate the status of data packets in the receive FIFO specified by EPINDEX.	S:E5H
RXSTAT	**Endpoint Receive Status Register.** Contains the endpoint status of the receive FIFO specified by EPINDEX.	S:E2H
SOFH	**Start of Frame High Register.** Contains isochronous data transfer enable and interrupt bits and the upper three bits of the 11-bit time stamp received from the host.	S:D3H
SOFL	**Start of Frame Low Register.** Contains the lower eight bits of the 11-bit time stamp received from the host.	S:D2H
TXCNTH	**Transmit Count High Register.** High register in a two-register ring buffer used to store the byte count for the data packets in the transmit FIFO specified by EPINDEX.	S:F7H
TXCNTL	**Transmit Count Low Register.** Low register in a two-register ring buffer used to store the byte count for the data packets in the transmit FIFO specified by EPINDEX.	S:F6H
TXCON	**Transmit FIFO Control Register.** Controls the transmit FIFO specified by EPINDEX.	S:F4H
TXDAT	**Transmit FIFO Data Register.** Transmit FIFO data is written to this register (specified by EPINDEX).	S:F3H
TXFLG	**Transmit Flag Register.** These flags indicate the status of data packets in the transmit FIFO specified by EPINDEX.	S:F5H
TXSTAT	**Endpoint Transmit Status Register.** Contains the endpoint status of the transmit FIFO specified by EPINDEX.	S:FAH

7.1.4 USB Function FIFO's

The 8X930A*x* provides eight FIFOs in support of the four USB function endpoints — a transmit/receive FIFO pair for each endpoint. Table 7-3 lists the 8X930A*x* FIFOs and gives the byte capacity of each. The FIFOs associated with function endpoints 0, 2, and 3 have capacities of 16 bytes. As shown in the table, bits FFSZ.1:0 of the TXCON SFR permit the endpoint 1 transmit/receive FIFO pair to be partitioned as follows: 256/256, 512/512, 1024/0, or 0/1024 bytes.

Transmit FIFOs are written by the 8X930A*x* CPU and then read by the function interface for transmission. Receive FIFOs are written by the function interface following reception and then read by the CPU. All transmit FIFOs have the same architecture, and all receive FIFOs have the same architecture.

Table 7-3. 8X930A*x* FIFO Configurations

Endpoint Select (EPINDEX.1:0)		Transmit FIFOs	Receive FIFOs	FIFO Size (FFSZ.1:0)†
0 0	Endpoint 0 (Control)	16 bytes	16 bytes	XX
0 1	Endpoint 1	256 bytes	256 bytes	0 0
		512 bytes	512 bytes	0 1
		1024 bytes	0 bytes	1 0
		0 bytes	1024 bytes	1 1
1 0	Endpoint 2	16 bytes	16 bytes	XX
1 1	Endpoint 3	16 bytes	16 bytes	XX

† Bits FFSZ.1:0 are bits 7:6 of register TXCON, and are accessible for endpoint 1 only (EPINDEX = 01).

7.1.5 The FIU SFR Set

The two low-order bits of the endpoint index register (EPINDEX, bits EPINX1:0) contain the current endpoint index value (*x* = 0, 1, 2, 3). The index value indicates the endpoint. Use the binary form 0xxxxxyyB to write the index value to the EPINDEX register, where yy is the encoded endpoint address (i.e., 00 for endpoint 0, 01 for endpoint 1, etc.). See Table 7-3.

It is recommended that programmers set the contents of EPINDEX once, at the start of each routine, instead of writing the EPINDEX register prior to each access of an endpoint-indexed SFR. This means that interrupt service routines must save the contents of the EPINDEX register at the start of the routine and restore the contents at the end of the routine to prevent the EPINDEX register from being corrupted.

EPINDEX

Address S:F1H
Reset State 1XXX XX00B

7							0
—	—	—	—	—	—	EPINX1	EPINX0

Bit Number	Bit Mnemonic	Function
7:2	—	Reserved: Write zeros to these bits. Note: Although the reset state for bit 7 is ‘1’, always write zeros to bits 7:2 of this register.
1:0	EPINX1:0	Endpoint Index Select: Used to select the function endpoint number to be indexed. The 8X930A*x* is set up accordingly: the USB SFR definitions for TXDAT, TXCON, TXFLG, TXCNTH/L, RXDAT, RXCON, RXFLG, RXCNTH/L, EPCON, TXSTAT, and RXSTAT are adjusted for the selected endpoint. The SFRs are connected to the appropriate transmit/receive FIFO pair. This register is hardware read-only. **EPINX1 EPINX0** 0 0 Endpoint 0. Control Transfer 0 1 Endpoint 1. 1 0 Endpoint 2. 1 1 Endpoint 3.

Figure 7-1. EPINDEX: Endpoint Index Register

EPCON

Address		S:E1H
Reset State	*x* = 0†	0011 0101B
	x = 1, 2, 3†	0001 0000B

7							0
RXSTL	TXSTL	CTLEP	RXSPM	RXIE	RXEPEN	TXOE	TXEPEN

Bit Number	Bit Mnemonic	Function
7	RXSTL	Stall Receive Endpoint: Set this bit to stall the receive endpoint. Clear this bit only when the host has intervened through commands sent down endpoint 0. When this bit is set and RXSETUP is clear, the receive endpoint will respond with a STALL handshake to a valid OUT token. This bit does not affect the reception of SETUP tokens by a control endpoint. The state of this bit is sampled on a valid OUT token.
6	TXSTL	Stall Transmit Endpoint: Set this bit to stall the transmit endpoint. This bit should only be cleared when the host has intervened through commands sent down endpoint 0. When this bit is set and RXSETUP is clear, the receive endpoint will respond with a STALL handshake to a valid IN token.The state of this bit is sampled on a valid IN token.
5	CTLEP	Control Endpoint: Set this bit to configure the endpoint as a control endpoint. Only control endpoints are capable of receiving SETUP tokens. The state of this bit is sampled on a valid SETUP token.
4	RXSPM	Receive Single Packet Mode: Set this bit to configure the receive endpoint for single data packet operation. When enabled, only a single data packet is allowed to reside in the receive FIFO. The state of this bit is sampled on a valid OUT token. Note: For control endpoints (CTLEP=1), this bit should be set for single packet mode operation as the recommended firmware model. However, it is acceptable to have a control endpoint with dual packet mode configuration as long as the firmware handles the endpoint correctly.
3	RXIE	Receive Input Enable: Set this bit to enable data from the USB to be written into the receive FIFO. If cleared, the endpoint will not write the received data into the receive FIFO and at the end of reception, it returns a NAK handshake on a valid OUT token if the RXSTL bit is not set.This bit does not affect a valid SETUP token.
2	RXEPEN	Receive Endpoint Enable: Set this bit to enable the receive endpoint. When disabled, the endpoint does not respond to a valid OUT or SETUP token. The state of this bit is sampled on a valid OUT or SETUP token. This bit is hardware read-only and has the highest priority among RXIE and RXSTL. Note that endpoint 0 is enabled for reception upon reset.

† *x* = endpoint index. See EPINDEX.

EPCON (Continued)

Address		S:E1H
Reset State	$x = 0^{\dagger}$	0011 0101B
	$x = 1, 2, 3^{\dagger}$	0001 0000B

7							0
RXSTL	TXSTL	CTLEP	RXSPM	RXIE	RXEPEN	TXOE	TXEPEN

Bit Number	Bit Mnemonic	Function
1	TXOE	Transmit Output Enable. This bit is used to enable the data in the transmit FIFO to be transmitted. If cleared, the endpoint returns a NAK handshake to a valid IN token if the TXSTL bit is not set. The state of this bit is sampled on a valid IN token.
0	TXEPEN	Transmit Endpoint Enable: This bit is used to enable the transmit endpoint. When disabled, the endpoint does not respond to a valid IN token. The state of this bit is sampled on a valid IN token. This bit is hardware read only. Note that endpoint 0 is enabled for transmission upon reset.

† *x* = endpoint index. See EPINDEX.

Figure 7-2. EPCON: Control Endpoint Register

TXSTAT

Address: S:F2H
Reset State: 0000 0000B

7							0
TXSEQ	—	—	TXFLUSH	TXSOVW	TXVOID	TXERR	TXACK

Bit Number	Bit Mnemonic	Function
7	TXSEQ	Transmitter's Current Sequence Bit (read, conditional write): † This bit will be transmitted in the next PID and toggled on a valid ACK handshake. This bit is toggled by hardware on a valid SETUP token. This bit can be written by firmware if the TXSOVW bit is set when written together with the new TXSEQ value.
6:5	—	Reserved: Values read from these bits are indeterminate. Write zeros to these bits.
4	TXFLUSH	Transmit FIFO Packet Flushed: When set, this bit indicates that hardware flushed a stale ISO data packet from the transmit FIFO due to a TXFIF = '11' at SOF. This bit is set by hardware, but can also be set by software with the same effect.†
3	TXSOVW	Transmit Data Sequence Overwrite Bit: † Write a '1' to this bit to allow the value of the TXSEQ bit to be overwritten. Writing a '0' to this bit has no effect on TXSEQ. This bit always returns '0' when read. ††
2	TXVOID	Transmit Void (read-only): A void condition has occurred in response to a valid IN token. Transmit void is closely associated with the NAK/STALL handshake returned by function after a valid IN token, due to the conditions that cause the transmit FIFO to be unenabled or not ready to transmit. Use this bit to check any NAK/STALL handshake ever returned by function. This bit does not affect the FTXD*x*, TXERR or TXACK bits. This bit is updated by hardware at the end of a non-isochronous transaction in response to a valid IN token. For isochronous transactions, this bit is not updated until the next SOF.

† Under normal operation, this bit should not be modified by the user.

†† The SIE will handle all sequence bit tracking. This bit should only be used when initializing a new configuration or interface.

TXSTAT (Continued)

Address: S:F2H
Reset State: 0000 0000B

7							0
TXSEQ	—	—	TXFLUSH	TXSOVW	TXVOID	TXERR	TXACK

Bit Number	Bit Mnemonic	Function
1	TXERR	Transmit Error (read-only): An error condition has occurred with the transmission. Complete or partial data has been transmitted. The error can be one of the following: 1. Data transmitted successfully but no handshake received. 2. Transmit FIFO goes into underrun condition while transmitting. The corresponding transmit done bit (FTXD*x* in FIFLG) is set when active. For non-isochronous transactions, this bit is updated by hardware together with the TXACK bit at the end of the data transmission (this bit is mutually exclusive with TXACK). For isochronous transactions, this bit is not updated until the next SOF.
0	TXACK	Transmit Acknowledge (read-only): Data transmission completed and acknowledged successfully. The corresponding transmit done bit (FTXD*x* in FIFLG) is set when active. For non-isochronous transactions, this bit is updated by hardware together with the TXERR bit at the end of data transmission (this bit is mutually exclusive with TXERR). For isochronous transactions, this bit is not updated until the next SOF.

† Under normal operation, this bit should not be modified by the user.

†† The SIE will handle all sequence bit tracking. This bit should only be used when initializing a new configuration or interface.

Figure 7-3. TXSTAT: Transmit FIFO Status Register

RXSTAT

Address: S:E2H
Reset State: 0000 0000B

7							0
RXSEQ	RXSETUP	STOVW	EDOVW	RXSOVW	RXVOID	RXERR	RXACK

Bit Number	Bit Mnemonic	Function
7	RXSEQ	Receiver Endpoint Sequence Bit (read, conditional write): † This bit will be toggled on completion of an ACK handshake in response to an OUT token. This bit will be set (or cleared) by hardware after reception of a SETUP token. This bit can be written by firmware if the RXSOVW bit is set when written together with the new RXSEQ value. Note: Always verify this bit after writing to ensure that there is no conflict with hardware, which could occur if a new SETUP token is received.
6	RXSETUP	Received Setup Token: This bit is set by hardware when a valid SETUP token has been received. When set, this bit causes received IN or OUT tokens to be NAKed until the bit is cleared to allow proper data management for the transmit and receive FIFOs from the previous transaction. IN or OUT tokens are NAKed even if the endpoint is stalled (RXSTL or TXSTL) to allow a control transaction to clear a stalled endpoint. Clear this bit upon detection of a SETUP token after the firmware is ready to complete the status stage of a control transaction.
5	STOVW	Start Overwrite Flag (read-only): Set by hardware upon receipt of a SETUP token for any control endpoint to indicate that the receive FIFO is being overwritten with new SETUP data. When set, the FIFO state (FIF and read pointer) resets and is locked for this endpoint until EDOVW is set. This prevents a prior, ongoing firmware read from corrupting the read pointer as the receive FIFO is being cleared and new data is being written into it. This bit is cleared by hardware during the handshake phase of the setup stage. This bit is only used for control endpoints.
4	EDOVW	End Overwrite Flag: This flag is set by hardware during the handshake phase of a SETUP stage. It is set after every SETUP packet is received and *must* be cleared prior to reading the contents of the FIFO. When set, the FIFO state (FIF and read pointer) remains locked for this endpoint until this bit is cleared. This prevents a prior, ongoing firmware read from corrupting the read pointer after the new data has been written into the receive FIFO. This bit is only used for control endpoints.

† Under normal operation, this bit should not be modified by the user.

†† The SIE will handle all sequence bit tracking. This bit should only be used when initializing a new configuration or interface.

RXSTAT (Continued)

Address: S:E2H
Reset State: 0000 0000B

7							0
RXSEQ	RXSETUP	STOVW	EDOVW	RXSOVW	RXVOID	RXERR	RXACK

Bit Number	Bit Mnemonic	Function
3	RXSOVW	Receive Data Sequence Overwrite Bit: † Write a ‘1’ to this bit to allow the value of the RXSEQ bit to be overwritten. This is needed to clear a STALL on a control endpoint. Writing a ‘0’ to this bit has no effect on RXSEQ. This bit always returns ‘0’ when read. ††
2	RXVOID	Receive Void Condition (read-only): This bit is set when no valid data is received in response to a SETUP or OUT token due to one of the following conditions: 1. The receive FIFO is still locked. 2. The EPCON register’s RXSTL bit is set for a non-control endpoint. This bit is set and cleared by hardware. For non-isochronous transactions, this bit is updated by hardware at the end of the transaction in respond to a valid OUT token. For isochronous transactions, it is not updated until the next SOF.
1	RXERR	Receive Error (read-only): Set when an error condition has occurred with the reception. Complete or partial data has been written into the receive FIFO. No handshake is returned. The error can be one of the following conditions: 1. Data failed CRC check. 2. Bit stuffing error. 3. A receive FIFO goes into overrun or underrun condition while receiving. This bit is updated by hardware at the end of a valid SETUP or OUT token transaction (non-isochronous) or at the next SOF on each valid OUT token transaction (isochronous). The corresponding FRXD*x* bit of FIFLG is set when active. This bit is updated with the RXACK bit at the end of data reception and is mutually exclusive with RXACK.
0	RXACK	Receive Acknowledged (read-only): This bit is set when data is received completely into a receive FIFO and an ACK handshake is sent. This read-only bit is updated by hardware at the end of a valid SETUP or OUT token transaction (non-isochronous) or at the next SOF on each valid OUT token transaction (isochronous). The corresponding FRXD*x* bit of FIFLG is set when active. This bit is updated with the RXERR bit at the end of data reception and is mutually exclusive with RXERR.

† Under normal operation, this bit should not be modified by the user.

†† The SIE will handle all sequence bit tracking. This bit should only be used when initializing a new configuration or interface.

Figure 7-4. RXSTAT: Receive FIFO Status Register

SOFH

Address: S:D3H
Reset State: 0000 0000B

7							0
SOFACK	ASOF	SOFIE	FTLOCK	SOFODIS	TS10	TS9	TS8

Bit Number	Bit Mnemonic	Function
7	SOFACK	SOF Token Received without Error (read-only): When set, this bit indicates that the 11-bit time stamp stored in SOFL and SOFH is valid. This bit is updated every time a SOF token is received from the USB bus, and it is cleared when an artificial SOF is generated by the frame timer. This bit is set and cleared by hardware.
6	ASOF	Any Start-of-Frame: This bit is set by hardware to indicate that a new frame has started. The interrupt can result either from reception of an actual SOF packet or from an artificially-generated SOF from the frame timer. This interrupt is asserted in hardware even if the frame timer is not locked to the USB bus frame timing. When set, this bit is an indication that either an actual SOF packet was received or an artificial SOF was generated by the frame timer. This bit must be cleared by software or inverted and driven to the SOF# pin. The effect of setting this bit by software is the same as hardware: the external pin will be driven with an inverted ASOF value for eight T_{CLK}s. This bit also serves as the SOF interrupt flag. This interrupt is only asserted in hardware if the SOF interrupt is enabled (SOFIE set) and the interrupt channel is enabled.
5	SOFIE	SOF Interrupt Enable: When this bit is set, setting the ASOF bit causes an interrupt request to be generated if the interrupt channel is enabled. Hardware reads but does not write this bit.
4	FTLOCK	Frame Timer Locked (read-only): When set, this bit indicates that the frame timer is presently locked to the USB bus' frame time. When cleared, this bit indicates that the frame timer is attempting to synchronize to the frame time.
3	SOFODIS	SOF# Pin Output Disable: When set, no low pulse will be driven to the SOF# pin in response to setting the ASOF bit. The SOF# pin will be driven to '1' when SOFODIS is set. When this bit is clear, setting the ASOF bit causes the SOF# pin to be toggled with a low pulse for eight T_{CLK}s.
2:0	TS10:8	Time stamp received from host: TS10:8 are the upper three bits of the 11-bit frame number issued with an SOF token. This time stamp is valid only if the SOFACK bit is set.

Figure 7-5. SOFH: Start of Frame High Register

SOFL

Address: S:D2H
Reset State: 0000 0000B

7							0
TS7:0							

Bit Number	Bit Mnemonic	Function
7:0	TS7:0	Time stamp received from host: This time stamp is valid only if the SOFACK bit in the SOFH register is set. TS7:0 are the lower eight bits of the 11-bit frame number issued with a SOF token. If an artificial SOF is generated, the time stamp remains at its previous value and it is up to firmware to update it. These bits are set and cleared by hardware.

Figure 7-6. SOFL: Start of Frame Low Register

FADDR

Address: S:8FH
Reset State: 0000 0000B

7							0
—	A6:0						

Bit Number	Bit Mnemonic	Function
7	—	Reserved: The value read from this bit is indeterminate. Write a zero to this bit.
6:0	A6:0	7-bit Programmable Function Address: This register is programmed through the commands received via endpoint 0 on configuration, which should be the only time the firmware should change the value of this register. This register is read-only by hardware.

Figure 7-7. FADDR: Function Address Register

7.2 TRANSMIT FIFOS

The 8X930A*x* has four USB function transmit FIFOs, one for each endpoint. In this manual, the term transmit FIFO refers to the transmit FIFO associated with the current endpoint as specified by the EPINDEX register.

7.2.1 Transmit FIFO Overview

The transmit FIFOs are circulating data buffers with the following features:

- support for up to two separate data sets of variable sizes†
- a byte count register to store the number of bytes in the data sets
- protection against overwriting data in a full FIFO
- capability to retransmit the current data set

All transmit FIFOs have the same architecture (Figure 7-8). The transmit FIFO and its associated logic can manage up to two data sets, data set 0 (ds0) and data set 1 (ds1). The ability to have two data sets in the FIFO supports back-to-back transmissions.

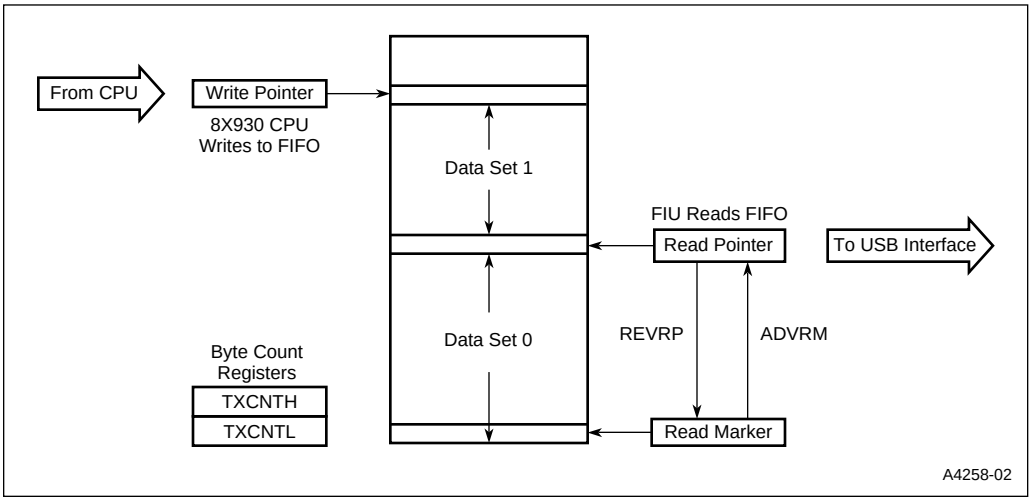

Figure 7-8. Transmit FIFO Outline

The CPU writes to the FIFO location specified by the *write pointer*, which increments by one automatically following a write. The *read marker* points to the first byte of data written to a data set, and the *read pointer* points to the next FIFO location to be read by the function interface. The read pointer increments by one automatically following a read.

† When operating in dual packet mode, the maximum packet size should be at most half the FIFO size to ensure that both packets will simultaneously fit in the FIFO (see the Endpoint description in the *Universal Serial Bus Specification*).

When a good transmission is completed, the read marker can be advanced to the position of the read pointer to set up for reading the next data set. When a bad transmission is completed, the read pointer can be reversed to the position of the read marker to enable the function interface to re-read the last data set for retransmission. The read marker advance and read pointer reversal can be accomplished two ways: explicitly by software or automatically by hardware, as specified by bits in the transmit FIFO control register (TXCON).

7.2.2 Transmit FIFO Registers

There are five registers directly involved in the operation of the transmit FIFOs:

- TXDAT, the transmit FIFO data register
- TXCNTH and TXCNTL, the transmit FIFO byte count registers referred to jointly as TXCNT
- TXCON, the transmit FIFO control register
- TXFLG, the transmit FIFO flag register

These registers are endpoint indexed, i.e., they are used as a set to control the operation of the transmit FIFO associated with the current endpoint specified by the EPINDEX register. Figures 7-10 through 7-13 beginning on page 7-18 describe the transmit FIFO registers and provide bit definitions.

7.2.3 Transmit Data Register (TXDAT)

Bytes are written to the transmit FIFO via the transmit FIFO data register (TXDAT).

7.2.4 Transmit Byte Count Registers (TXCNTL/TXCNTH)

The format of the transmit byte count register depends on the endpoint. For endpoint 1, registers TXCNTH and TXCNTL form a two-register, ten-bit ring buffer which accommodates packet sizes of 0 to 1023 bytes. For endpoints 0, 2, and 3, TXCNTL is used alone as a five-bit ring buffer to accommodate packet sizes of 0 to 16 bytes. These formats are shown in Figure 7-11 on page 7-19. The term TXCNT refers to either of these arrangements.

The transmit FIFO byte count register (TXCNT) stores the number of bytes in either of the two data sets, data set 0 (ds0) and data set 1 (ds1). The FIFO logic for maintaining the data sets assumes that data is written to the FIFO in the following sequence:

1. The CPU first writes data bytes to TXDAT.
2. The CPU writes the number of bytes that were written to TXDAT to the byte count register TXCNT. TXCNT must be written after the write to TXDAT to guarantee data integrity. For function endpoint 1, TXCNTL should be written after TXCNTH. Writing to TXCNTH does not affect the TXFIF bits, however writing to TXCNTHL does set the associated TXFIF bits.

NOTE

TXCNTH does not need to be written if it is always 00H, as the reset value is 00H. However, if TXCNTH is not 00H, it should always be written even though the value does not change from the previous cycle; this is because the byte count registers are 2-byte circular buffers and not "static" registers.

For all endpoints except function endpoint 1, TXCNTH is not available and TXCNTL only contains BC4:0. Bits 7:5 are reserved in this case and should always be written with '0'.

The function interface reads the byte count register to determine the number of bytes in the set.

The transmit byte count register has a *read/write index* to allow it to access the byte count for either of the two data sets (see Figure 7-9). After reset, the read/write index points to data set 0. Thereafter, the following logic determines the position of the read/write index:

- After a write to TXCNT, the read/write index (TXFIF) is toggled
- After a read of TXCNT, the read/write index (TXFIF) is unchanged

The position of the read/write index can also be determined from the data set index bits, FIF1:0 (see "Transmit Data Set Management" on page 7-17).

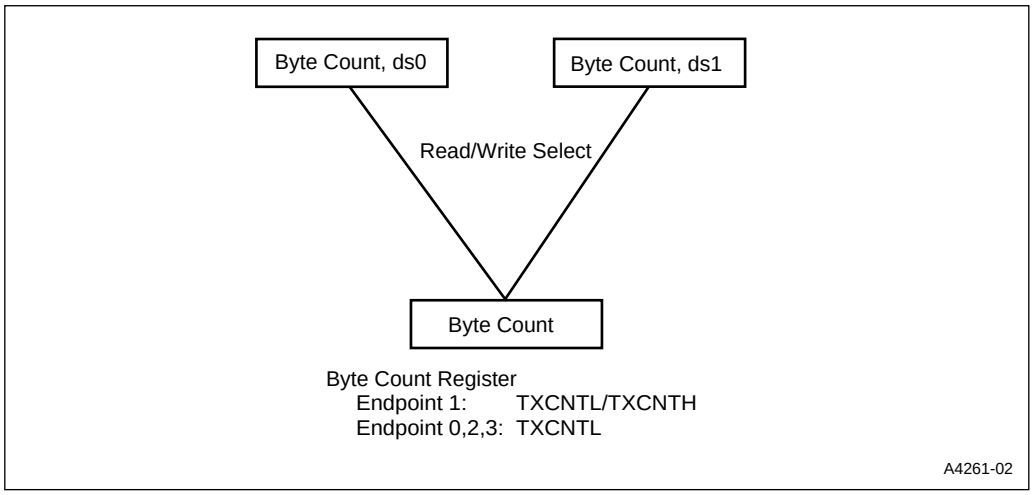

Figure 7-9. Transmit Byte Count Registers

7.2.5 Transmit Data Set Management

Two read-only data set index bits, FIF1:0 in the TXFLG register, indicate which data sets (ds0 and/or ds1) have been written into the FIFO (see the left side of Table 7-4). FIF*x* = 1 indicates that data set *x* has been written. Following reset, FIF1:0 = 00, signifying an empty FIFO. FIF1:0 also determine which data set is written next. Note that FIF0 specifies the next data set to be written, except for the case of FIF1:0 = 11. In this case further writes to TXDAT or TXCNT are ignored.

NOTE

To simplify firmware development, it is recommended that you utilize control endpoints in single-packet mode only.

Two events cause the data set index bits to be updated:

- A new data set is written to the FIFO: the 8X930A*x* writes bytes to the FIFO via TXDAT and writes the number of bytes to TXCNT. The data set index bits are updated after the write to TXCNT. This process is illustrated in Table 7-4.
- A data set in the FIFO is successfully transmitted: the function interface reads a data set from the FIFO, and when a good transmission is acknowledged, the read marker is advanced to the read pointer. The data set index bits are updated after the read marker is advanced. Note that in ISO mode, this happens at the next SOF.

Table 7-4. Writing to the Byte Count Register

FIF1:0		Data Sets Written			Set for Next Write to TXCNT			FIF1:0	
		ds1	ds0						
0	0	No	No	(Empty)	ds0	—>	Write bytes to TXDAT.	0	1
0	1	No	Yes	(1 set)	ds1	—>	Write byte count to TXCNT	1	1
1	0	Yes	No	(1 set)	ds0			1	1
1	1	Yes	Yes	(2 sets)	Write ignored			1	1

Table 7-5 summarizes how the actions following a transmission depend on the TXISO bit, the ATM bit, the TXACK bit, and the TXERR bit.

Table 7-5. Truth Table for Transmit FIFO Management

TXISO (TXCON.3)	ATM (TXCON.2)	TXERR (TXSTAT.1)	TXACK (TXSTAT.0)	Action at End of Transfer Cycle
X	X	0	0	No operation.
X	0	0	1	Read marker, read pointer, and TXFIF bits remain unchanged. Managed by software.
X	0	1	0	Read marker, read pointer, and TXFIF bits remain unchanged. Managed by software.
0	1	0	1	Read marker advanced automatically.The TXFIF bit for the corresponding data set is cleared.
0	1	1	0	Read pointer reversed automatically. The TXFIF bit for the corresponding data set remains unchanged.
1	1	X	X	Read marker advanced automatically.The TXFIF bit for the corresponding data set is cleared at the SOF.

NOTE

For normal operation, set the ATM bit in TXCON. Hardware will automatically control the read pointer and read marker, and track the TXFIF bits.

TXDAT Address: S:F3H
Reset State: xxxx xxxxB

7							0
Transmit Data Byte							

Bit Number	Bit Mnemonic	Function
7:0	TXDAT[7:0]	Transmit Data Byte (write-only): To write data to the transmit FIFO, write to this register. The write pointer and read pointer are incremented automatically after a write and read respectively.

Figure 7-10. TXDAT: Transmit FIFO Data Register

TXCNTH,	Address:		S:F7H
TXCNTL			S:F6H
	Reset States:	Endpoint 1	TXCNTH XXXX XX00B
			TXCNTL 0000 0000B
		Endpoints 0, 2, 3	TXCNTL XXX0 0000B

15 (TXCNTH) Endpoint 1 **8**

—	—	—	—	—	—	BC9	BC8

7 (TXCNTL) **0**

BC7	BC6	BC5	BC4	BC3	BC2	BC1	BC0

7 (TXCNTL) Endpoints 0, 2, 3 **0**

—	—	—	BC4	BC3	BC2	BC1	BC0

Bit Number	Bit Mnemonic	Function
Endpoint 1 (x = 1)†		
15:10	—	Reserved. Write zeros to these bits.
9:0	BC9:0	Transmit Byte Count. Ten-bit, ring buffer byte count register stores transmit byte count (TXCNT) of 0 to 1023 bytes for endpoint 1 only.
Endpoints 0, 2, 3. (x = 0, 2, 3)†		
7:0	—	Reserved. Write zeros to these bits.
4:0	BC4:0	Transmit Byte Count. Five-bit, ring buffer byte count register stores transmit byte count (TXCNT) of 0 to 16 bytes for endpoints 0, 2, and 3.

† x = endpoint index. See the EPINDEX register.

Figure 7-11. TXCNTH/TXCNTL Transmit FIFO Byte Count Registers

NOTE

To send a status stage after a control write or no data control command or a null packet, write 0 to TXCNT.

TXCON

Address: S:F4H
Reset State: *x* = 1† 000X 0100B
x = 0, 2, 3† 0XXX 0100B

7							0
TXCLR	FFSZ.1	FFSZ.0	—	TXISO	ATM	ADVRM	REVRP

Bit Number	Bit Mnemonic	Function
7	TXCLR	Transmit Clear: Setting this bit flushes the transmit FIFO, sets the EMPTY bit in TXFLG, and clears all other bits in TXFLG. After the flush, hardware clears this bit. Setting this bit does not affect the ATM, TXISO, and FFSZ bits, or the TXSEQ bit in the TXSTAT register.
6:5	FFSZ[1:0]	FIFO Size: These two bits are used for FIFO size configuration by function endpoint 1 only (EPINDEX = 01). The endpoint 1 FIFO size configurations (in bytes) are: **FFSZ[1:0] Transmit Size Receive Size** 00 256 256 01 512 512 10 1024 0 11 0 1024 These bits are not reset when the TXCLR bit is set in the TXCON register. NOTE: The receive FIFO size is also set by the TXCON FFSZ bits. Therefore, there are no corresponding FFSZ bits in RXCON.
4	—	Reserved: Values read from this bit are indeterminate. Write zero to this bit.
3	TXISO	Transmit Isochronous Data: Software sets this bit to indicate that the transmit FIFO contains isochronous data. The FIU uses this bit to set up the handshake protocol at the end of a transmission. This bit is not reset when TXCLR is set and must be cleared by software.

† *x* = endpoint index. See EPINDEX.

†† The read marker and read pointer should only be controlled manually for testing (when the ATM bit is clear). At all other times the ATM bit should be set and the ADVRM and REVRP bits should be left alone.

TXCON (Continued)

Address: S:F4H
Reset State: $x = 1^{\dagger}$ 000X 0100B
$x = 0, 2, 3^{\dagger}$ 0XXX 0100B

7							0
TXCLR	FFSZ.1	FFSZ.0	—	TXISO	ATM	ADVRM	REVRP

Bit Number	Bit Mnemonic	Function
2	ATM	Automatic Transmit Management: Setting this bit (the default value) causes the read pointer and read marker to be adjusted automatically as indicated: **ISO** **TX Status** **Read Pointer** **Read Marker** X ACK Unchanged Advanced* 0 NAK Reversed** Unchanged 1 NAK Unchanged Advanced* * to origin of next data set ** to origin of the data set last read When this bit is set, setting REVRP or ADVRM has no effect. This is a sticky bit that is not reset when TXCLR is set, but can be set and cleared by software. Hardware neither clears nor sets this bit. Note: This bit should always be set, except as a testability feature.
1	ADVRM	Advance Read Marker Control (non-ATM mode only) ††: Setting this bit advances the read marker to point to the origin of the next data packet (the position of the read pointer) to prepare for the next packet transmission. Hardware clears this bit after the read marker is advanced. Setting this bit is effective only when the REVRP, ATM, and TXCLR bits are all clear.
0	REVRP	Reverse Read Pointer Control (non-ATM mode only) ††: In the case of bad transmission, the same data stack may need to be available for retransmit. Setting this bit reverses the read pointer to point to the origin of the last data set (the position of the read marker) so that the FIU can reread the last set for retransmission. Hardware clears this bit after the read pointer is reversed. Setting this bit is effective only when the ADVRM, ATM, and TXCLR bits are all clear.

† *x* = endpoint index. See EPINDEX.

†† The read marker and read pointer should only be controlled manually for testing (when the ATM bit is clear). At all other times the ATM bit should be set and the ADVRM and REVRP bits should be left alone.

Figure 7-12. TXCON: Transmit FIFO Control Register

TXFLG

Address: S:F5H
Reset State: 00XX 1000B

7							0
TXFIF1	TXFIF0	—	—	TXEMP	TXFULL	TXURF	TXOVF

Bit Number	Bit Mnemonic	Function
7:6	TXFIF[1:0]	FIFO Index Flags (read-only): These flags indicate which data sets are present in the transmit FIFO. The FIF bits are set in sequence after each write to TXCNT to reflect the addition of a data set. Likewise, TXFIF1 and TXFIF0 are cleared in sequence after each advance of the read marker to indicate that the set is effectively discarded. The bit is cleared whether the read marker is advanced by software (setting ADVRM) or automatically by hardware (ATM = 1). The next-state table for the TXFIF bits is shown below: **TXFIF[1:0] / Operation / Flag / Next TXFIF[1:0] / Next Flag** 00 / Wr TXCNT / X / 01 / Unchanged 01 / Wr TXCNT / X / 11 / Unchanged 10 / Wr TXCNT / X / 11 / Unchanged 11 / Wr TXCNT / X / 11 / TXOVF = 1 00 / Adv RM / X / 00 / Unchanged 01 / Adv RM / X / 00 / Unchanged 11 / Adv RM / X / 10/01 / Unchanged 10 / Adv RM / X / 00 / Unchanged XX / Rev RP / X / Unchanged / Unchanged In ISO mode, TXOVF, TXURF, and TXFIF are handled using the following rule: Firmware events cause status change immediately, while USB events cause status change only at SOF. TXFIF is "incremented" by firmware and "decremented" by the USB.Therefore, writes to TXCNT "increment" TXFIF immediately. However, a successful USB transaction any time within a frame "decrements" TXFIF only at SOF. You must check the TXFIF flags before and after writes to the transmit FIFO and TXCNT for traceability. NOTE: To simplify firmware development, configure control endpoints in single-packet mode.
5:4	—	Reserved: Values read from these bits are indeterminate. Write zeros to these bits.
3	TXEMP	Transmit FIFO Empty Flag (read-only): Hardware sets this bit when the write pointer has not rolled over and is at the same location as the read pointer. Hardware clears this bit when the pointers are at different locations. Regardless of ISO or non-ISO mode, this bit always tracks the current transmit FIFO status.

† When set, all transmissions are NAKed.

TXFLG (Continued)

Address: S:F5H
Reset State: 00XX 1000B

7							0
TXFIF1	TXFIF0	—	—	TXEMP	TXFULL	TXURF	TXOVF

Bit Number	Bit Mnemonic	Function
2	TXFULL	Transmit FIFO Full Flag (read-only): Hardware sets this bit when the write pointer has rolled over and equals the read marker. Hardware clears this bit when the full condition no longer exists. Regardless of ISO or non-ISO mode, this bit always tracks the current transmit FIFO status. Check this bit to avoid causing a TXOVF condition.
1	TXURF	Transmit FIFO Underrun Flag: Hardware sets this flag when an additional byte is read from an empty transmit FIFO or TXCNT [This is caused when the value written to TXCNT is greater than the number of bytes written to TXDAT.]. This is a sticky bit that must be cleared through software. When this flag is set, the FIFO is in an unknown state, thus it is recommended that you reset the FIFO in your error management routine using the TXCLR bit in TXCON. When the transmit FIFO underruns, the read pointer will not advance — it remains locked in the empty position.† In ISO mode, TXOVF, TXURF, and TXFIF are handled using the following rule: Firmware events cause status change immediately, while USB events cause status change only at SOF. Since underrun can only be caused by USB, TXURF is updated at the next SOF regardless of where the underrun occurs in the frame.
0	TXOVF	Transmit FIFO Overrun Flag: This bit is set when an additional byte is written to a full FIFO or full TXCNT with TXFIF1:0 = 11. This is a sticky bit that must be cleared through software. When this bit is set, the FIFO is in an unknown state, thus it is recommended that you reset the FIFO in your error management routine using the TXCLR bit in TXCON. When the receive FIFO overruns, the write pointer will not advance — it remains locked in the full position. Check this bit after loading the FIFO prior to writing the byte count register.† In ISO mode, TXOVF, TXURF, and TXFIF are handled using the following rule: Firmware events cause status change immediately, while USB events cause status change only at SOF. Since overrun can only be caused by firmware, TXOVF is updated immediately. Check the TXOVF flag after writing to the transmit FIFO before writing to TXCNT.

† When set, all transmissions are NAKed.

Figure 7-13. TXFLG: Transmit FIFO Flag Register

7.3 RECEIVE FIFOs

The 8X930A*x* has four USB function receive FIFOs — one for each endpoint. In this manual, the term receive FIFO refers to the receive FIFO associated with the current endpoint as specified by the EPINDEX register.

7.3.1 Receive FIFO Overview

The receive FIFOs are circulating data buffers with the following features:

- support for up to two separate data sets of variable sizes†
- a byte count register that accesses the number of bytes in the data sets
- flags to signal a full FIFO and an empty FIFO
- capability to re-receive the last data set

Figure 7-14 illustrates a receive FIFO. A receive FIFO and its associated logic can manage up to two data sets, data set 0 (ds0) and data set 1 (ds1). The ability to have two data sets in the FIFO supports back-to-back receptions.

In many ways the receive FIFO is symmetrical to the transmit FIFO. The FIU writes to the FIFO location specified by the *write pointer*, which increments by one automatically following a write. The *write marker* points to the first byte of data written to a data set, and the *read pointer* points to the next FIFO location to be read by the 8X930A*x*. The read pointer increments by one automatically following a read.

When a good reception is completed, the write marker can be advanced to the position of the write pointer to set up for writing the next data set. When a bad reception is completed, the write pointer can be reversed to the position of the write marker to enable the FIU to rewrite the last data set after receiving the data again. The write marker advance and write pointer reversal can be accomplished two ways: explicitly by software or automatically by hardware, as specified by bits in the receive FIFO control register.

It is not practical for the 8X930A*x* to begin scooping the receive FIFO before all bytes are received and successfully acknowledged because the reception may be bad. Once it begins scooping the FIFO, the 8X930A*x* can use the FIFO empty flag to signal an end to reading data.

The FIU can monitor the FIFO full flag (RXFULL bit in RXFLG) to avoid overwriting data in the receive FIFO. The 8X930A*x* can monitor the FIFO empty flag (RXEMP bit in RXFLG) to avoid reading a byte when the FIFO is empty.

† When operating in dual packet mode, the maximum packet size should be at most half the FIFO size to ensure that both packets will simultaneously fit in the FIFO (see the endpoint descriptor in the *Universal Serial Bus Specification*).

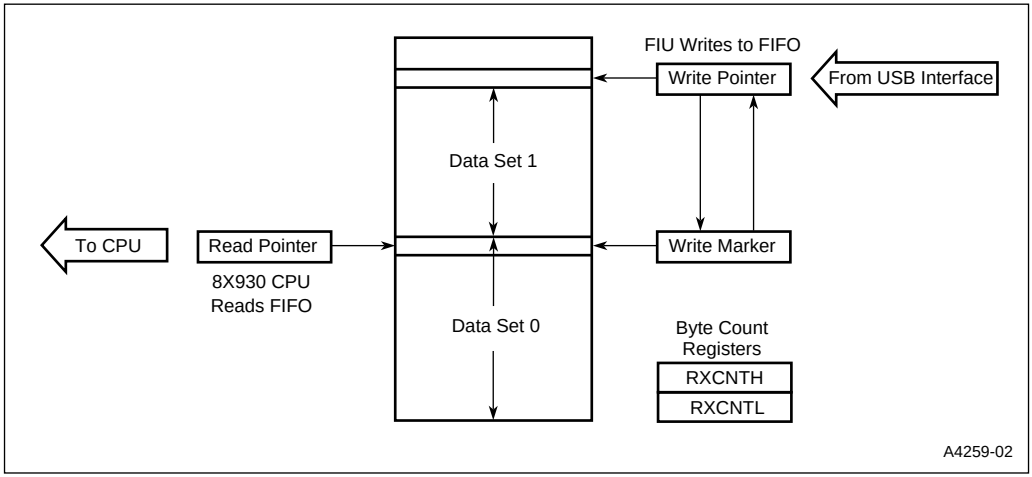

Figure 7-14. Receive FIFO

7.3.2 Receive FIFO Registers

There are five registers directly involved in the operation of the receive FIFOs:

- RXDAT, the receive FIFO data register
- RXCNTH and RXCNTL, the receive FIFO byte count registers referred to jointly as RXCNT
- RXCON, the receive FIFO control register
- RXFLG, the receive FIFO flag register

These registers are endpoint indexed, i.e., they are used as set to control the operation of the receive FIFO associated with the current endpoint specified by the EPINDEX register. Figures 7-15 through 7-13 beginning on page 7-27 describe the receive FIFO registers and provide bit definitions.

7.3.2.1 Receive Data Register (RXDAT)

Bytes read from the receive FIFO via the receive FIFO data register (RXDAT).

7.3.2.2 Receive Byte Count Registers (RXCNTL/RXCNTH)

The format of the receive byte count register depends on the endpoint. For endpoint 1, registers RXCNTH and RXCNTL form a ten-bit ring buffer which accommodates packet sizes of 0 to 1023 bytes. For endpoints 0, 2, and 3, RXCNTL is used alone as five-bit ring buffer to accommodate packet sizes of 0 to 16 bytes. These formats are shown in Table 7-16 on page 7-28. The term RXCNT refers to either of these arrangements.

The receive FIFO byte count register (RXCNT) stores the number of bytes in either of the two data sets, data set 0 (ds0) and data set 1 (ds1). The FIFO logic for maintaining the data sets assumes that data is written to the FIFO in the following sequence:

1. The USB interface first writes the received data packet into the receive FIFO.
2. The USB interface then writes the number of bytes that were written into the receive FIFO to the byte count register RXCNT. RXCNTL must be written after the data packet has been received into the receive FIFO to guarantee data integrity.

NOTE

For all endpoints except function endpoint 1, RXCNTH is not available and RXCNTL only contains BC4:0. Bits 7:5 are reserved in this case and will always be read as '0'.

The CPU reads the byte count register to determine the number of bytes in the set.

The receive byte count register has a *read/write index* to allow it to access the byte count for either of the two data sets. This is similar to the methodology used for the transmit byte count register — see Figure 7-9 on page 7-16. After reset, the read/write index points to data set 0. Thereafter, the following logic determines the position of the read/write index:

- After a read of RXCNT, the read/write index (RXFIF) is unchanged
- After a write of RXCNT, the read/write index (RXFIF) is toggled

The position of the read/write index can also be determined from the data set index bits, FIF1:0 (see "Receive FIFO Data Set Management" on page 7-26).

NOTE

RXCNT should only be read if FIF1:0 ≠ 00.

7.3.3 Receive FIFO Data Set Management

As in the transmit FIFO, the receive FIFO uses a pair of bits (FIF1:0 in the RXFLG register) to indicate which data sets are present in the receive FIFO (see Table 7-6).

Table 7-6. Status of the Receive FIFO Data Sets

FIF1:0		Data Sets Written		
		ds1	ds0	
0	0	No	No	(Empty)
0	1	No	Yes	(1 set)
1	0	Yes	No	(1 set)
1	1	Yes	Yes	(2 sets)

Table 7-7 summarizes how the actions following a reception depend on the RXISO bit, the ARM bit, and the handshake issued by the 8X930A*x*.

Table 7-7. Truth Table for Receive FIFO Management

RXISO (RXCON.3)	ARM (RXCON.2)	RXERR (RXSTAT.1)	RXACK (RXSTAT.0)	Action at End of Transfer Cycle
X	X	0	0	No operation.
X	0	0	1	Write marker, write pointer, and RXFIF bits remain unchanged. Managed by software.
X	0	1	0	Write marker, write pointer, and RXFIF bits remain unchanged. Managed by software.
0	1	0	1	Write marker advanced automatically. The RXFIF bit for the corresponding data set is set.
0	1	1	0	Write pointer reversed automatically.The RXFIF bit for the corresponding data set is cleared.
1	1	X	X	Write marker advanced automatically. If data was written to the receive FIFO, the RXFIF bit for the corresponding data set is set.

NOTE

For normal operation, set the ARM bit in RXCON: hardware will automatically control the write pointer and write marker and track the RXFIF bits.

RXDAT

Address: S:E3H
Reset: XXXX XXXXB

7							0
RXDAT.7:0							

Bit Number	Bit Mnemonic	Function
7:0	RXDAT.7:0	To write data to the receive FIFO, the FIU writes to this register. To read data from the receive FIFO, the 8X930A*x* reads from this register. The write pointer and read pointer are incremented automatically after a write and read, respectively.

Figure 7-15. RXDAT: Receive FIFO Data Register

RXCNTH,	Address:		S:E7H
RXCNTL			S:E6H
	Reset States:		
	Endpoint 1	RXCNTH	XXXX XX00B
		RXCNTL	0000 0000B
	Endpoints 0, 2, 3	RXCNTL	XXX0 0000B

15 (RXCNT) Endpoint 1 **8**

—	—	—	—	—	—	BC9	BC8

7 (RXCNTL) **0**

BC7	BC6	BC5	BC4	BC3	BC2	BC1	BC0

7 (RXCNTL) Endpoints 0, 2, 3 **0**

—	—	—	BC4	BC3	BC2	BC1	BC0

Bit Number	Bit Mnemonic	Function
Endpoint 1 (*x* = 1)†		
15:10	—	Reserved. Write zeros to these bits.
9:0	BC9:0	Receive Byte Count. Ten-bit, ring buffer byte count register stores receive byte count (RXCNT) of 0 to 1023 bytes for endpoint 1 only.
Endpoints 0, 2, 3. (*x* = 0, 2, 3)†		
7:0	—	Reserved. Write zeros to these bits.
4:0	BC4:0	Receive Byte Count. Five-bit, ring buffer byte count register stores receive byte count (RXCNT) of 0 to 16 bytes for endpoints 0, 2, and 3.

† *x* = endpoint index. See the EPINDEX register.

Figure 7-16. RXCNTH/RXCNTL: Receive FIFO Byte Count Registers

CAUTION

Do not read RXCNT to determine if data is present in the receive FIFO. Always read the FIF bits in the RXFLG register. RXCNT contains random data during a receive operation. A read attempt to RXCNT during the time the receive FIFO is empty causes the RXURF flag in RXFLG to be set. Always read the FIF bits to determine if data is present in the receive FIFO. The RXFLG FIF bits are updated after RXCNT is written (at the end of the receive operation).

RXCON

Address: S:E4H
Reset State: 0X00 0100B

7							0
RXCLR	—	RXWS	RXFFRC	RXISO	ARM	ADVWM	REVWP

Bit Number	Bit Mnemonic	Function
7	RXCLR	Clear the Receive FIFO: Set this bit to flush the entire receive FIFO. All flags in RXFLG revert to their reset states (RXEMP is set; all other flags clear). The ARM, RXISO and RXWS bits in this register and the RXSEQ bit in the RXSTAT register are not affected by this operation. Hardware clears this bit when the flush operation is completed.
6	—	Reserved: Values read from this bit are indeterminate. Write zero to this bit.
5	RXWS	Receive FIFO Wait-state Read: At the 8X930A*x* core frequency of 12 MHz, not all instructions that access the receive FIFO are guaranteed to work due to critical paths inherent in the 8X930A*x* architecture.While all MOV instructions from the receive FIFO are guaranteed to work at 12 MHz, arithmetic instructions (e.g., ADD, SUB, etc.) where the receive FIFO is the source and the register file the destination may not work at this speed. For applications using arithmetic instructions, set the RXWS bit to read the receive FIFO with one wait state — this will eliminate the critical path. This bit is not reset when the RXCLR bit is set.
4	RXFFRC	FIFO Read Complete: Set this bit to release the receive FIFO when a data set read is complete. Setting this bit “clears” the RXFIF “bit” (in the RXFLG register) corresponding to the data set that was just read. Hardware clears this bit after the RXFIF bit is cleared. All data from this data set must have been read. Note that FIFO Read Complete only works if STOVW and EDOVW are cleared.
3	RXISO	Isochronous Data Type: Set this bit to indicate that the receive FIFO is programmed to receive isochronous data and to set up the USB Interface to handle an isochronous data transfer. This bit is not reset when the RXCLR bit is set; it must be cleared by software.

† The write marker and write pointer should only be controlled manually for testing (when the ARM bit is clear). At all other times the ARM bit should be set and the ADVWM and REVWP bits should be left alone.

RXCON

Address: S:E4H
Reset State: 0X00 0100B

7							0
RXCLR	—	RXWS	RXFFRC	RXISO	ARM	ADVWM	REVWP

Bit Number	Bit Mnemonic	Function
2	ARM	Auto Receive Management: When set, the write pointer and write marker are adjusted automatically based on the following conditions: **RXISO** / **RX Status** / **Write Pointer** / **Write Marker** X / ACK / Unchanged / Advanced 0 / NAK / Reversed / Unchanged 1 / NAK / Unchanged / Advanced When this bit is set, setting REVWP or ADVWM has no effect. Hardware neither clears nor sets this bit. This is a sticky bit that is not reset when RXCLR is set. Note: This bit should always be set, except for testing.
1	ADVWM	Advance Write Marker: † (For non-ARM mode only) Set this bit to advance the write marker to the origin of the next data set. Advancing the write marker is used for back-to-back receptions. Hardware clears this bit after the write marker is advanced. Setting this bit is effective only when the REVWP, ARM and RXCLR bits are clear.
0	REVWP	Reverse Write Pointer: † (For non-ARM mode only) Set this bit to return the write pointer to the origin of the last data set received, as identified by the write marker. The FIU can then re-receive the last data packet and write to the receive FIFO starting from the same origin when the host re-sends the same data packet. Hardware clears this bit after the write pointer is reversed. Setting this bit is effective only when the ADVWM, ARM, and RXCLR bits are all clear. REVWP is used when a data packet is bad. When the function interface receives the data packet again, the write starts at the origin of the previous (bad) data set.

† The write marker and write pointer should only be controlled manually for testing (when the ARM bit is clear). At all other times the ARM bit should be set and the ADVWM and REVWP bits should be left alone.

Figure 7-17. RXCON: Receive FIFO Control Register

RXFLG

Address: S:E5H
Reset State: 00XX 1000B

7							0
RXFIF1	RXFIF0	—	—	RXEMP	RXFULL	RXURF	RXOVF

Bit Number	Bit Mnemonic	Function
7:6	RXFIF[1:0]	Receive FIFO Index Flags: (read-only) These read-only flags indicate which data packets are present in the receive FIFO (see Table 7-6 on page 7-26). The RXFIF bits are updated after each write to RXCNT to reflect the addition of a data packet. Likewise, the RXFIF bits are cleared in sequence after each setting of the RXFFRC bit. The next-state table for RXFIF bits is shown below for operation in dual packet mode. **RXFIF[1:0] Operation Flag Next RXFIF[1:0] Next Flag** 00 Adv WM X 01 Unchanged 01 Adv WM X 01 Unchanged 10 Adv WM X 11 Unchanged 00 Set RXFFRC X 00 Unchanged 01 Set RXFFRC X 00 Unchanged 11 Set RXFFRC X 10/01 Unchanged 10 Set RXFFRC X 00 Unchanged XX Rev WP X Unchanged Unchanged When the receive FIFO is programmed to operate in single packet mode (RXSPM set in EPCON), valid RXFIF states are 00 and 01 only. In ISO mode, RXOVF, RXURF, and RXFIF are handled using the following rule: Firmware events cause status change immediately, while USB events cause status change only at SOF. RXFIF is “incremented” by the USB and “decremented” by firmware.Therefore, setting RXFFRC “decrements” RXFIF immediately. However, a successful USB transaction within a frame “increments” RXFIF only at SOF. For traceability, you must check the RXFIF flags before and after reads from the receive FIFO and the setting of RXFFRC in RXCON. NOTE: To simplify firmware development, it is recommended that you utilize control endpoints in single-packet mode only.
5:4	—	Reserved: Values read from these bits are indeterminate. Write zeros to these bits.
3	RXEMP	Receive FIFO Empty Flag (read-only): Hardware sets this flag when the write pointer is at the same location as the read pointer AND the write pointer equals the write marker and neither pointer has rolled over. Hardware clears the bit when the empty condition no longer exists. This is not a sticky bit and always tracks the current status of the receive FIFO, regardless of ISO or non-ISO mode.

† When set, all transmissions are NAKed.

RXFLG (Continued)

Address: S:E5H
Reset State: 00XX 1000B

7							0
RXFIF1	RXFIF0	—	—	RXEMP	RXFULL	RXURF	RXOVF

Bit Number	Bit Mnemonic	Function
2	RXFULL	Receive FIFO Full Flag (read-only): Hardware sets this flag when the write pointer has rolled over and equals the read pointer. Hardware clears the bit when the full condition no longer exists. This is not a sticky bit and always tracks the current status of the receive FIFO, regardless of ISO or non-ISO mode.
1	RXURF	Receive FIFO Underrun Flag: Hardware sets this bit when an additional byte is read from an empty receive FIFO or RXCNT. Hardware does **not** clear this bit, so you must clear it in firmware. When the receive FIFO underruns, the read pointer will not advance — it remains locked in the empty position.† In ISO mode, RXOVF, RXURF, and RXFIF are handled using the following rule: Firmware events cause status change immediately, while USB events cause status change only at SOF. Since underrun can only be caused by firmware, RXURF is updated immediately. You must check the RXURF flag after reads from the receive FIFO before setting the RXFFRC bit in RXCON. NOTE: When this bit is set, the FIFO is in an unknown state. It is recommended that you reset the FIFO in the error management routine using the RXCLR bit in the RXCON register.
0	RXOVF	Receive FIFO Overrun Flag. This bit is set when the FIU writes an additional byte to a full receive FIFO or writes a byte count to RXCNT with FIF1:0 = 11. This is a sticky bit that *must* be cleared through software, although it can be cleared by hardware if a SETUP packet is received after an RXOVF error had already occurred.† When this bit is set, the FIFO is in an unknown state, thus it is recommended that you reset the FIFO in the error management routine using the RXCLR bit in the RXCON register. When the receive FIFO overruns, the write pointer will not advance — it remains locked in the full position. In ISO mode, RXOVF, RXURF, and RXFIF are handled using the following rule: Firmware events cause status change immediately, while USB events cause status change only at SOF. Since overrun can only be caused by the USB, RXOVF is updated only at the next SOF regardless of where the overrun occurred during the current frame.†

† When set, all transmissions are NAKed.

Figure 7-18. RXFLG: Receive FIFO Flag Register

7.4 SIE DETAILS

The USB employs differential data signaling; refer to the signaling levels table in the “Electrical” chapter of *Universal Serial Bus Specification*. The specification defines: differential’1’, differential’0’, idle (’J’ state), non-idle (’K’ state), start of packet, end of packet, disconnect, connect, reset, and resume. The USB employs NRZI data encoding when transmitting packets. Refer to “Data Encoding/Decoding” in the *Universal Serial Bus Specification* for a description of NRZI data encoding and decoding. To ensure adequate signal transitions, bit stuffing is employed by the SIE when transmitting data. The SIE also does bit unstuffing when receiving data. Consult the “Flow Diagram for Bit Stuffing” figure in the “Bit Stuffing” section of the “Electrical” chapter for more information on bit stuffing.

Bits are sent out onto the bus, least significant bit (LSb) first, followed by the next LSb, and so on. Bytes are sent out onto the bus least significant byte (LSB) first, followed by the next LSB and so on. The SIE ensures that the LSb is first, but the 8X930A*x* programmer must order the bytes.

The SIE decodes and takes care of all packet types and packet fields mentioned in “Protocol Layer” chapter of *Universal Serial Bus Specification*. The FIU communicates data information and handshaking instructions to the SIE. Programmers should consult the “Interconnect Description,” “USB Devices,” and “USB Host” chapters of *Universal Serial Bus Specification* for detailed information on how the host and function communicate.

7.5 SETUP TOKEN RECEIVE FIFO HANDLING

SETUP tokens received by a control endpoint must be ACKed even though the receive FIFO is not empty. When a SETUP token is detected by the FIU, the FIU sets the STOVW bit of RXSTAT and then flushes the receive FIFO by hardware, setting the RXCLR bit of RXCON. The STOVW indicates a SETUP initiated over-write (flush) is in progress. After the SETUP transaction is completed (i.e., ACK handshake), the FIU clears STOVW and sets EDOVW, indicating the receive FIFO over-write is complete and FIFO contents are stable. Reception of any SETUP packet, regardless of whether the receive FIFO is full or empty always sequences through the STOVW, EDOVW sequence described above.

Note that if the receive FIFO flush occurs in the middle of an 8X930A*x* CPU data read cycle (from a previous USB transaction), the receive FIFO may underrun, thus setting the RXURF bit of RXFLG and positioning the read pointer in an unknown state. To prevent this, STOVW resets and locks the read pointer. Firmware can monitor the STOVW and EDOVW flags to determine whether the underrun was due to a SETUP token received. If so, firmware needs to clear the EDOVW bit. Clearing the EDOVW bit will also clear the RXURF bit and revert the read pointer to the reset position. At this point, firmware is ready to read the SETUP data packet.

CAUTION

For SETUP packets, firmware must clear EDOVW prior to reading data from the FIFO. If this is not done, data read from the FIFO will be invalid.

After processing a data packet, firmware should always check the STOVW and EDOVW flags before setting the RXFFRC bit. When a SETUP packet either has been or is being received, setting of RXFFRC does not occur if either STOVW or EDOVW is set. It is up to the user to clear

EDOVW which disables the RXFFRC blocking mechanism. Also note that the RXSETUP=1 condition will cause IN tokens to automatically be NAKed until RXSETUP is cleared. This is true even if the transmit and/or receive endpoint is stalled (TXSTL=1, RXSTL=1), and is done to allow the clearing of a stall condition on a control endpoint.

NOTE

To simplify firmware development, it is recommended that you utilize control endpoints in single-packet mode only.

7.6 ISO DATA MANAGEMENT

ISO data management must always be performed in dual-packet mode. Interrupts are not generated when an ISO transmit or receive cycle is completed; ISO protocols should always be synchronized to the SOF interrupt. When transmitting, data written into the transmit FIFO at frame n is pre-buffered to be transmitted in frame n+1. This guarantees that data is always available to the host when requested anytime in a frame. When receiving, data written into the receive FIFO at frame n is pre-buffered to be read-out in frame n+1. This guarantees that data from the host is always available to the function every frame.

Isochronous data transfer is always guaranteed if the OUT or IN tokens from the host are not corrupted. When IN or OUT tokens to a function are corrupted, the host does not re-send the token. The function will need to recognize this error condition and reconfigure the endpoints accordingly.

7.6.1 Transmit FIFO ISO Data Management

When an IN token is corrupted, the data to be transmitted from the transmit FIFO for an isochronous endpoint in the current frame will be flushed. Due to latency concerns, this is handled by hardware. This error condition can be detected by checking TXFIF = "11" at SOF. When this occurs, the first data packet will be flushed and the transmit FIFO read-pointers and read-markers will be advanced to the start "address" of the second data packet. The TXFIF will also be updated. Therefore, the second packet will be ready to be transmitted for the next frame. The first data packet is lost.

For firmware traceability of FIFO status flags, some flags are updated immediately while others are updated only at SOF. TXOVF, TXURF and TXFIF are handled using the following rule: firmware events cause status change immediately while USB events only cause status change at SOF. For example:

- TXOVF: Since overrun can only be caused by firmware, TXOVF is updated immediately.
- TXURF: Since underrun can only be caused by SIE, TXURF is updated at SOF.
- TXFIF: TXFIF is "incremented" by firmware and "decremented" by hardware. Therefore, writes to TXCNT will "increment" TXFIF immediately. However, a successful USB transaction anytime in a frame will only "decrement" TXFIF at SOF.

The following bits do not follow the above rule:

- TXEMP/TXFULL: These always reflect the current status of the FIFO.
- TXFLUSH: Firmware can detect a flush by monitoring this bit.

7.6.2 Receive FIFO ISO Data Management

When an OUT token is corrupted, the data to be received by the receive FIFO for an isochronous endpoint in the current frame will be lost. There is no hardware implementation to track this error condition and should be managed by firmware. This condition can be detected by checking RXFIF = “00” at SOF. “Reconstruction” of the lost data is application specific and should be managed by firmware.

For firmware traceability of FIFO status flags, some flags are updated immediately while others are updated only at SOF. RXOVF, RXURF and RXFIF are handled using the following rule: firmware events cause status change immediately while USB events only cause status change at SOF.

- RXURF: Since underrun can only be caused by firmware, RXURF is updated immediately.
- RXOVF: Since overrun can only be caused by SIE, RXOVF is updated at SOF.
- RXFIF: RXFIF is “incremented” by hardware and “decremented” by firmware. Therefore, setting RXFFRC will “decrement” RXFIF immediately. However, a successful USB transaction anytime in a frame will only “increment” RXFIF at SOF.
- RXEMP/RXFULL: The rule does not apply to the RXEMP and RXFULL flags, which always reflect the current status of the FIFO.

8

USB Programming Models

CHAPTER 8
USB PROGRAMMING MODELS

This chapter describes the programming models of the USB function interface. It provides flow charts of suggested firmware routines for using the transmit and receive FIFOs to perform data transfers between the host PC and the embedded function. It also describes briefly how the firmware interacts with the USB module hardware during these operations. For a description of the USB function interface as well as its FIFOs and special functions registers (SFRs), refer to Chapter 7, “Universal Serial Bus.” Data operations refer to data transfers over the USB, whereas event operations are hardware operations such as attach and detach. For details on data flow in USB transactions refer to Appendix D.

8.1 OVERVIEW OF PROGRAMMING MODELS

The USB function interface employs four types of routines: receive, transmit, setup, and receive SOF. Program flow is depicted in Figure 8-1 along with the type of token associated with each routine. Following device reset, the USB function enters the unenumerated state and after enumeration by the host, the idle state. From the idle state, it can enter any of the four routines.

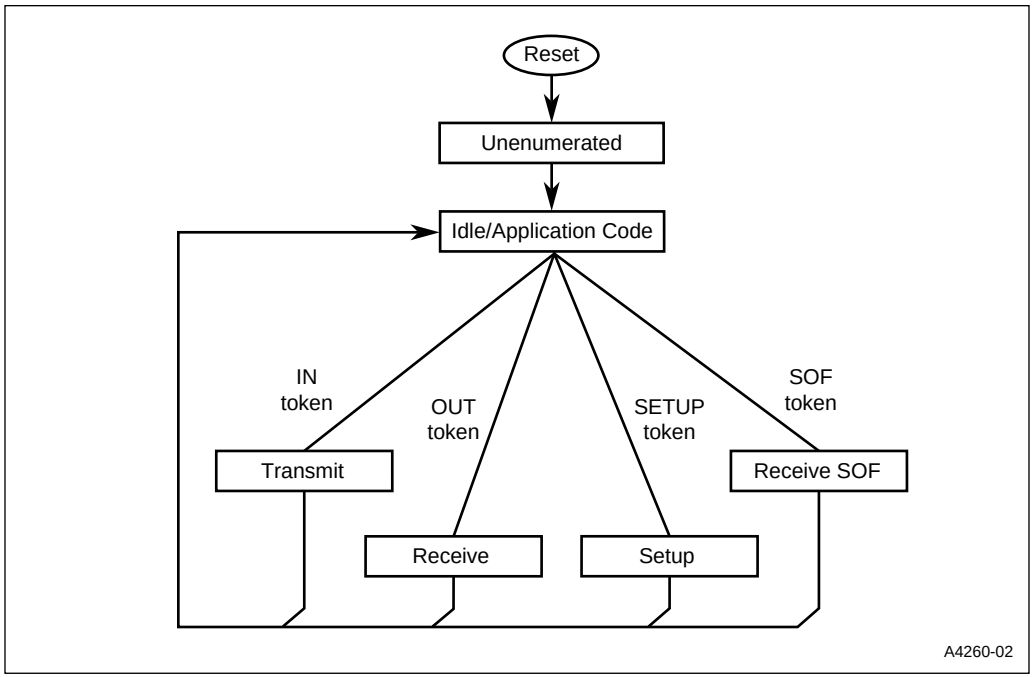

Figure 8-1. Program Flow

8.1.1 Unenumerated State

Following device reset, the USB function enters the unenumerated state. Initially the function address register FADDR contains the default value 00H. The host PC performs bus enumeration in which it identifies and addresses devices attached to the bus. During enumeration, a unique address assigned by the host is written to FADDR. The bus enumeration process has four steps:

1. Get descriptor. The host requests and reads the device descriptor to determine such information as device class, USB specification compliance level, maximum packet size for endpoint 0, vendor id, product id, etc. For detailed information on device descriptors, see the "Device Framework" chapter in *Universal Serial Bus Specification*.
2. Set address. The host sends the 8X930A*x*'s function address in a data packet using endpoint 0. Device firmware interprets the data and instructs the CPU to write the function address to FADDR.
3. Get configuration. The host requests and reads the device configuration descriptor to determine such information as the number of interfaces and endpoints; endpoint transfer type, packet size, and direction; power source; maximum power; etc. For detailed information on configuration descriptors, see the "Device Framework" chapter in *Universal Serial Bus Specification*. When the host requests the configuration descriptor, all related interface and endpoint descriptors are returned.
4. Set configuration. The host assigns a configuration value to the device to establish the current configuration. Devices can have multiple configurations.

8.1.2 Idle State

Following bus enumeration, the USB function enters the idle state. In this state, the 8X930A*x* executes application code associated with the embedded function. Upon receipt of a token with the assigned address, the module enters the designated routine.

8.1.3 Transmit and Receive Routines

When the 8X930A*x* is sending and receiving packets in the transmit and receive modes, its operation depends on the type of data that is transferred—isochronous or non-isochronous—and the adjustment of the FIFO markers and pointers—automatic or manual. These differences affect both the 8X930A*x* firmware and the operation of the 8X930A*x* hardware. For isochronous data, a failed transfer is not retried (lossy data). For non-isochronous data, a failed transfer can be repeated. Data that can be repeated is considered lossless data. Automatic adjustment of the FIFO markers and pointers is accomplished by the function interface hardware. Manual adjustment is accomplished by the 8X930A*x* firmware.

8.1.4 USB Interrupts

For an explanation of the USB global suspend/resume, function, and SOF interrupts, see Chapter 6, "Interrupt System."

8.2 TRANSMIT OPERATIONS

8.2.1 Overview

A transmit operation occurs in three major steps:

1. Pre-transmit data preparation by firmware
2. Data packet transmission by function interface hardware
3. Post-transmit management by firmware

These steps are depicted in a high-level view of transmit operations (Figure 8-2). The pre-transmit and post-transmit operations are executed by the two firmware routines shown on the left side of the figure. Function interface hardware (right side of the figure) transmits the data packet over the USB line. Details of these operations are described in “Pre-transmit Operations” on page 8-5 and “Post-transmit Operations” on page 8-6.

Transmit operations for non-isochronous data begin with an interrupt request from the embedded function (e.g., a keyboard entry). The pre-transmit routine (ISR) for the function writes the data from the function to the transmit FIFO where it is held until the next IN token. Upon receipt of the next valid IN token, the function interface shifts the data out of the FIFO and transmits it over the USB. If the data packet is not ready for transmission, 8X930A*x* hardware responds to the IN token with a NAK. The post-transmit routine checks the transmission status and performs data management tasks.

Completion of data transmission is indicated by a handshake returned by the host. This is then used to generate a transmit done interrupt to signal the end of data transmission to the CPU. The interrupt can also be used for activity tracking and fail-safe management. Fail-safe management permits recovery from lockups that can only be cleared by software.

For ISO data transmission, the cycle is similar. The significant differences are: the cycle is initiated by a start of frame (SOF) interrupt, there is no handshake associated with ISO transfer, and a transmit done interrupt is not generated. For ISO data transfers, the transaction status is updated at the end of the USB frame. The 8X930A*x* supports one ISO packet per frame per endpoint.

Two bits in the transmit FIFO control register (TXCON, Figure 7-12 on page 7-21) have a major influence on transmit operation:

- The TXISO bit (TXCON.3) determines whether the transmission is for isochronous data (TXISO = 1) or non-isochronous data (TXISO = 0). For non-isochronous data only, the function interface receives a handshake from the host, toggles or does not toggle the sequence bit, and generates a transmission done interrupt (Figure 8-2). Also, for non-isochronous data, the post-transmit routine is an ISR; for isochronous data the post-transmit routine is an ISR initiated by an SOF token.
- The ATM bit (TXCON.2) determines whether the FIFO read marker and read pointer are managed automatically by the FIFO hardware (ATM = 1) or manually by the second firmware routine (ATM = 0). Use of the ATM mode is recommended. The ADVRM and REVRP bits, which control the read marker and read pointer when ATM = 0, are used primarily for test purposes. See bit definitions in TXCON (Figure 7-12).

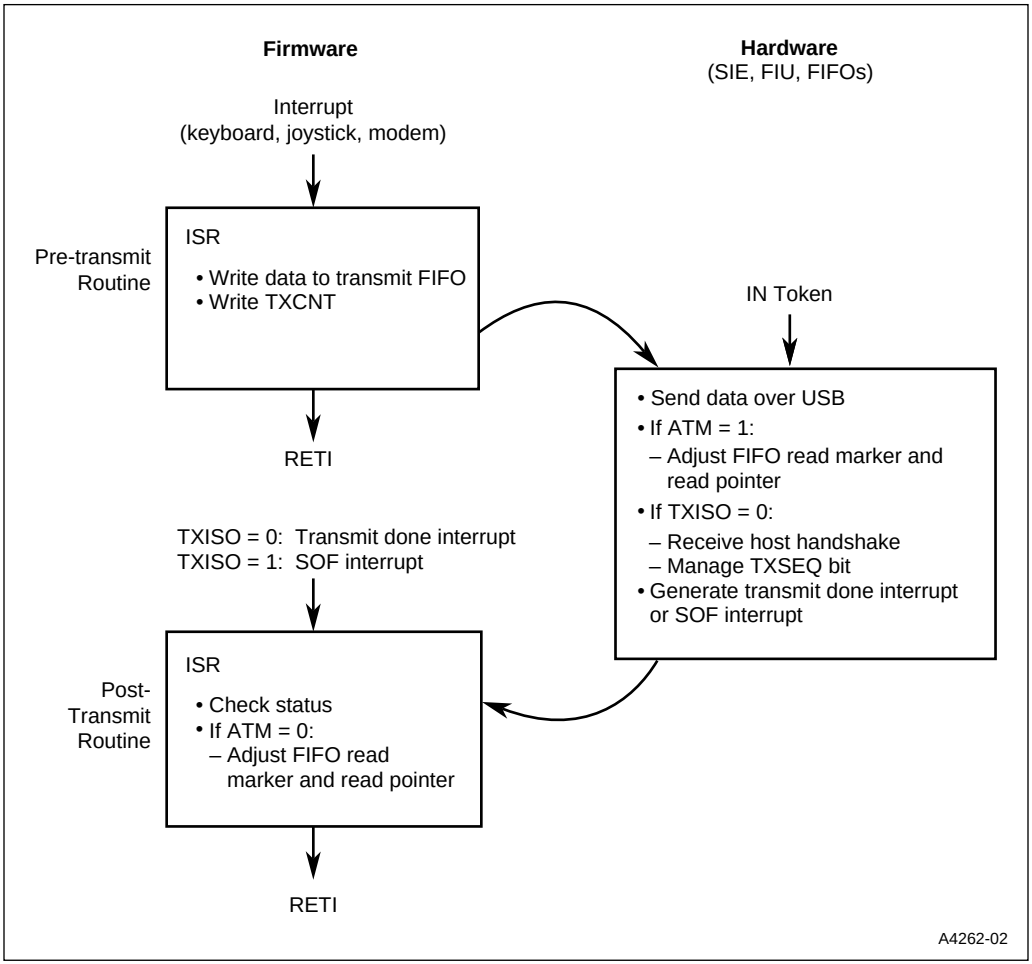

Figure 8-2. High-level View of Transmit Operations

8.2.2 Pre-transmit Operations

Transmitted data originates in the embedded function, which might be a keyboard, mouse, joystick, scanner, etc. In event-control applications, the end function signals the availability of data with an interrupt request for the pre-transmit interrupt service routine (ISR). The ISR should prepare the data for transmission and initiate the transmission process. The flow chart in Figure 8-3 illustrates a typical pre-transmit ISR.

For the case of isochronous data, the interrupt is triggered by the USB function in response to a start of frame (SOF) packet.

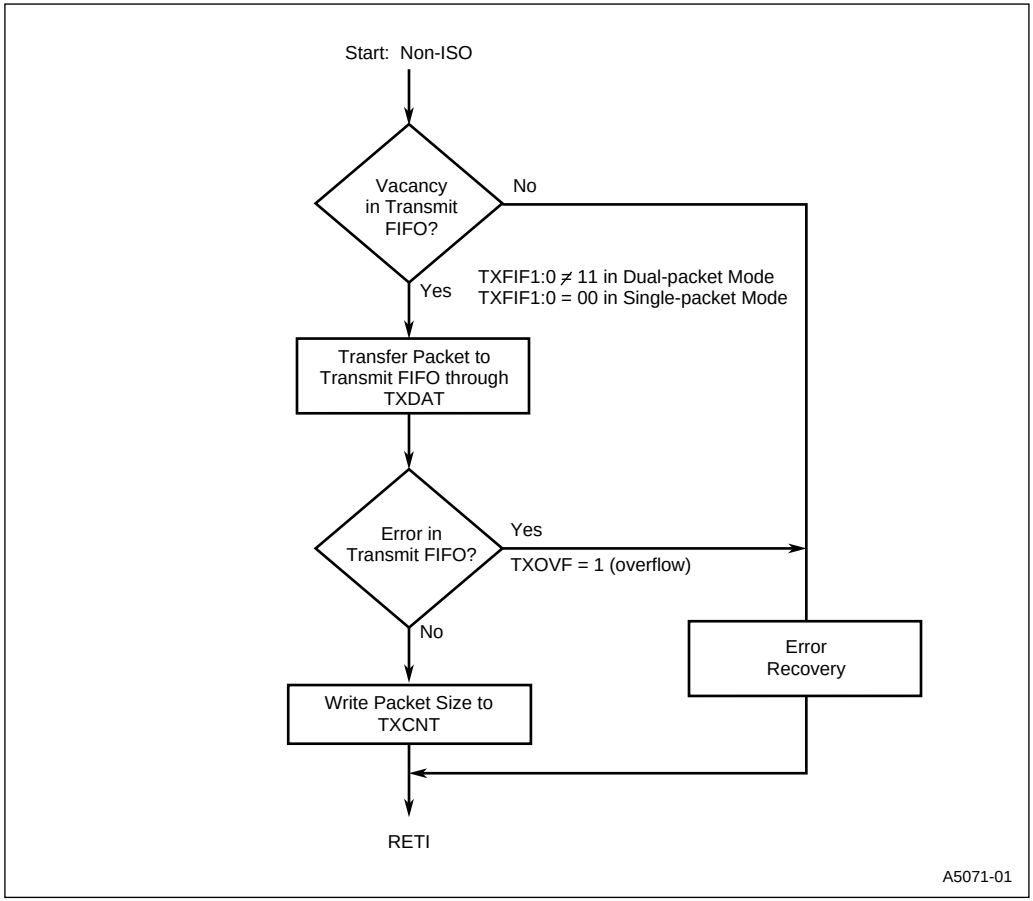

Figure 8-3. Pre-transmit ISR (Non-Isochronous)

8.2.3 Post-transmit Operations

Transmission status is updated at the end of data transmission based on the handshake received from the host (non-isochronous data) or based on the transmission process itself (isochronous data). For a non-isochronous transfer, the function interface generates a transmit done interrupt. The purpose of the post-transmit service routines is to manage the transmitter's state and to ensure data integrity for the next transmission. For isochronous data, the post-transmit routine should be embedded within the transfer request routine because both are triggered by an SOF. The flow of operations of typical post-transmit ISRs is illustrated in Figure 8-4 (non-isochronous data) and Figure 8-5 (isochronous data).

Figure 8-4. Post-transmit ISR (Non-isochronous)

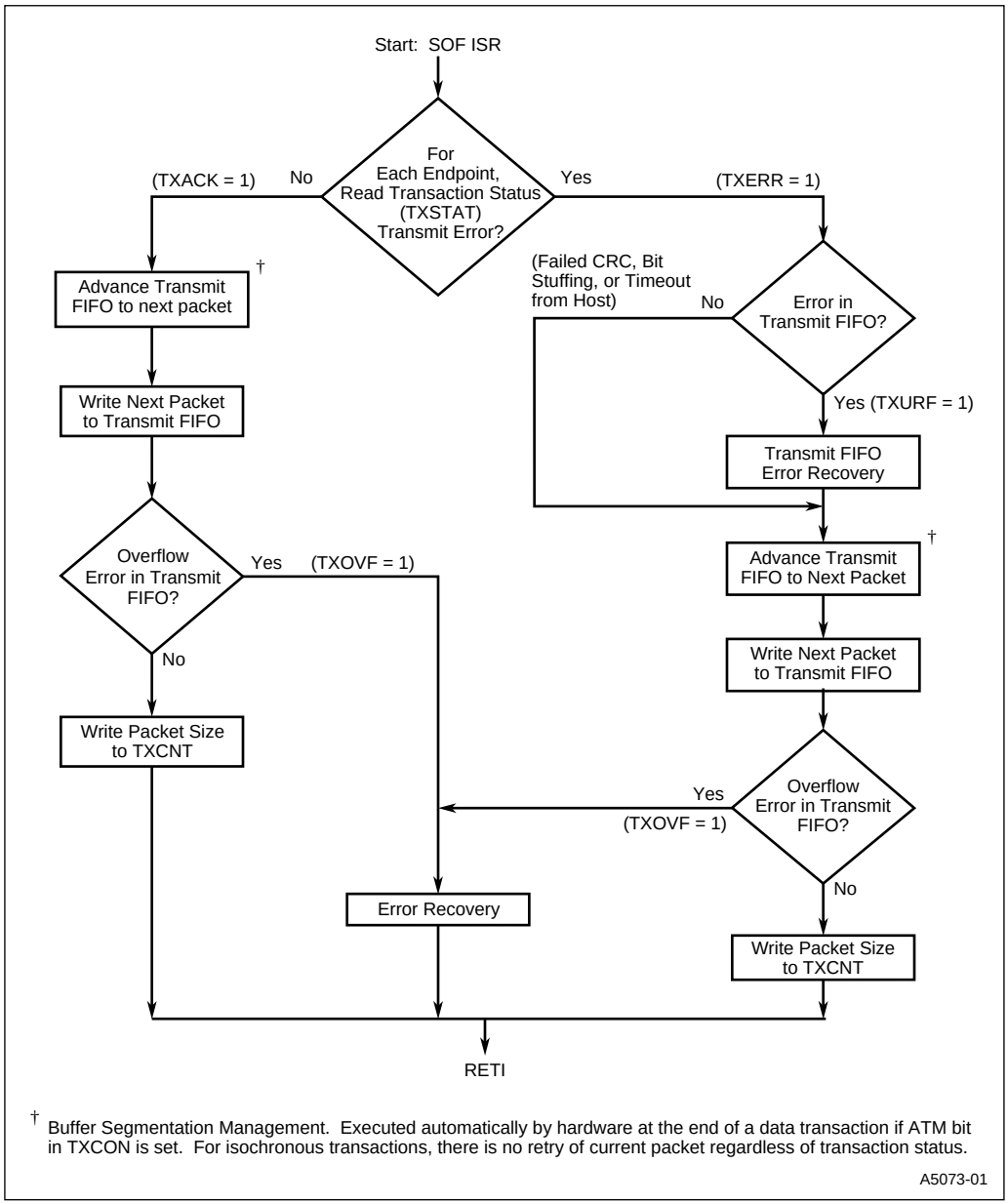

† Buffer Segmentation Management. Executed automatically by hardware at the end of a data transaction if ATM bit in TXCON is set. For isochronous transactions, there is no retry of current packet regardless of transaction status.

A5073-01

Figure 8-5. Post-transmit ISR (Isochronous)

8.3 RECEIVE OPERATIONS

8.3.1 Overview

A receive operation is always initiated by the host, which sends an OUT token to the 8X930A*x*. The operation occurs in two major steps:

1. Data packet reception by the function interface (hardware)
2. Post-receive management by firmware

These steps are depicted in a high-level view of the receive operations in Figure 8-6. The post-receive operations are executed by the firmware routine shown on the left side of the figure. For details see "Post-receive Operations" on page 8-9. Function interface hardware (right side of figure) receives the data packet over the USB line.

Receive operations for non-isochronous data begin when the 8X930A*x* receives a valid OUT token from the host. The received data is written to a data buffer FIFO. The 8X930A*x* indicates completion of data received by returning a handshake to the host.

At the end of the receive cycle, the 8X930A*x* generates a receive done interrupt to notify the CPU that a receive operation has occurred. Program execution branches to the interrupt service routine and transfers the data packet from the receive FIFO to its destination. The interrupt can also be used for fail-safe management and activity tracking.

For isochronous data, receive cycles are somewhat different. Data transactions are initiated by an OUT token. At the end of the OUT transaction, the 8x930Ax does not return handshake to the host and the receive done interrupt is not generated. Instead, the SOF interrupt is used for post receive management. The data reception status is updated at the next SOF. The 8X930A*x* supports one ISO packet per frame per endpoint.

Two bits in the receive FIFO control register (RXCON, Figure 7-17 on page 7-30) have a major influence on receive operation:

- The ISO bit (RXCON.3) determines whether the reception is for isochronous data (ISO = 1) or non-isochronous data (ISO = 0). For non-isochronous data only, the function interface sends a handshake to the host, checks the sequence bit, and generates a receive-done (FRXD*x*) interrupt. Also, for non-isochronous data, the post-receive routine is an ISR; for isochronous data the post-receive routine can be a normal subroutine or ISR initiated by an SOF token.
- The ARM bit (RXCON.2) determines whether the FIFO write marker and write pointer are managed automatically by the FIFO hardware (ARM = 1) or manually by the firmware routine (ARM = 0). Use of the ARM mode is recommended. The ADVWM and REVWP bits, which control the write marker and write pointer when ARM = 0, are used primarily for test purposes. See bit definitions in RXCON (Figure 7-17).

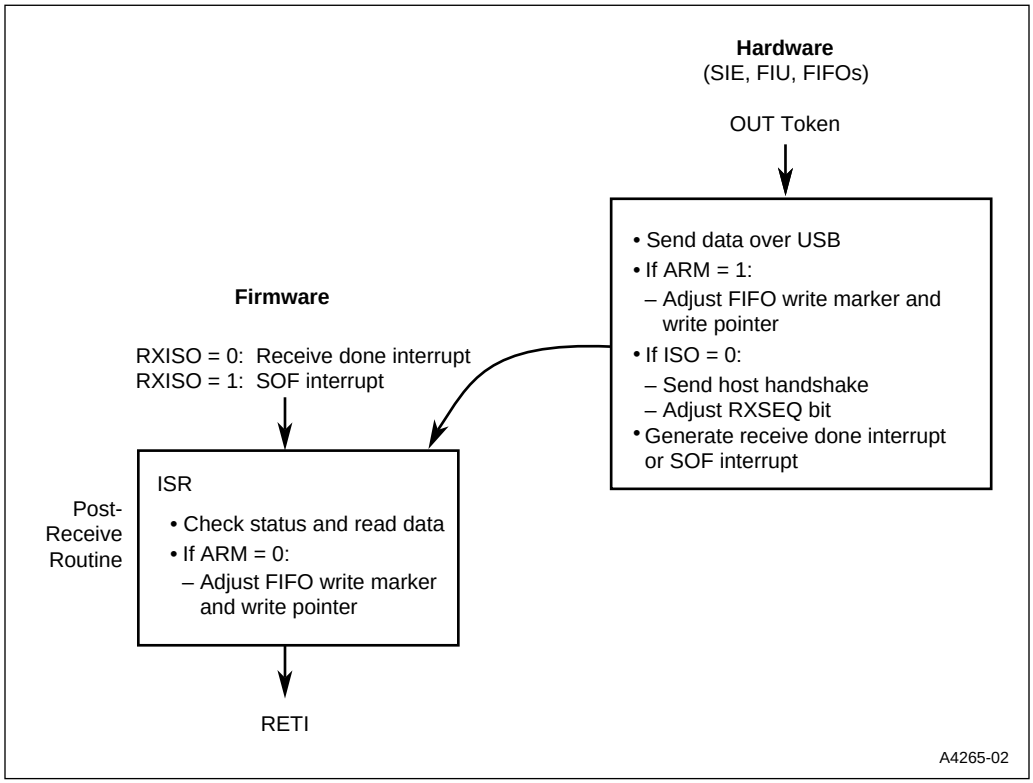

Figure 8-6. High-level View of Receive Operations

8.3.2 Post-receive Operations

Reception status is updated at the end of data reception based on the handshake received from the host (non-isochronous data) or based on the transmission process itself (isochronous data). For a non-isochronous transfer, the function interface generates a receive done interrupt (FRXD*x*). The purpose of the post-receive service routine is to manage the receiver's state to ensure data integrity and latency for the next reception. The post-receive routine also transfers the data in the receive FIFO to the end function. For isochronous data, the post-receive routine should be called by the SOF ISR.

Flow diagrams for typical post-receive routines are presented in Figure 8-7 (non-isochronous data) and Figure 8-8 (isochronous data).

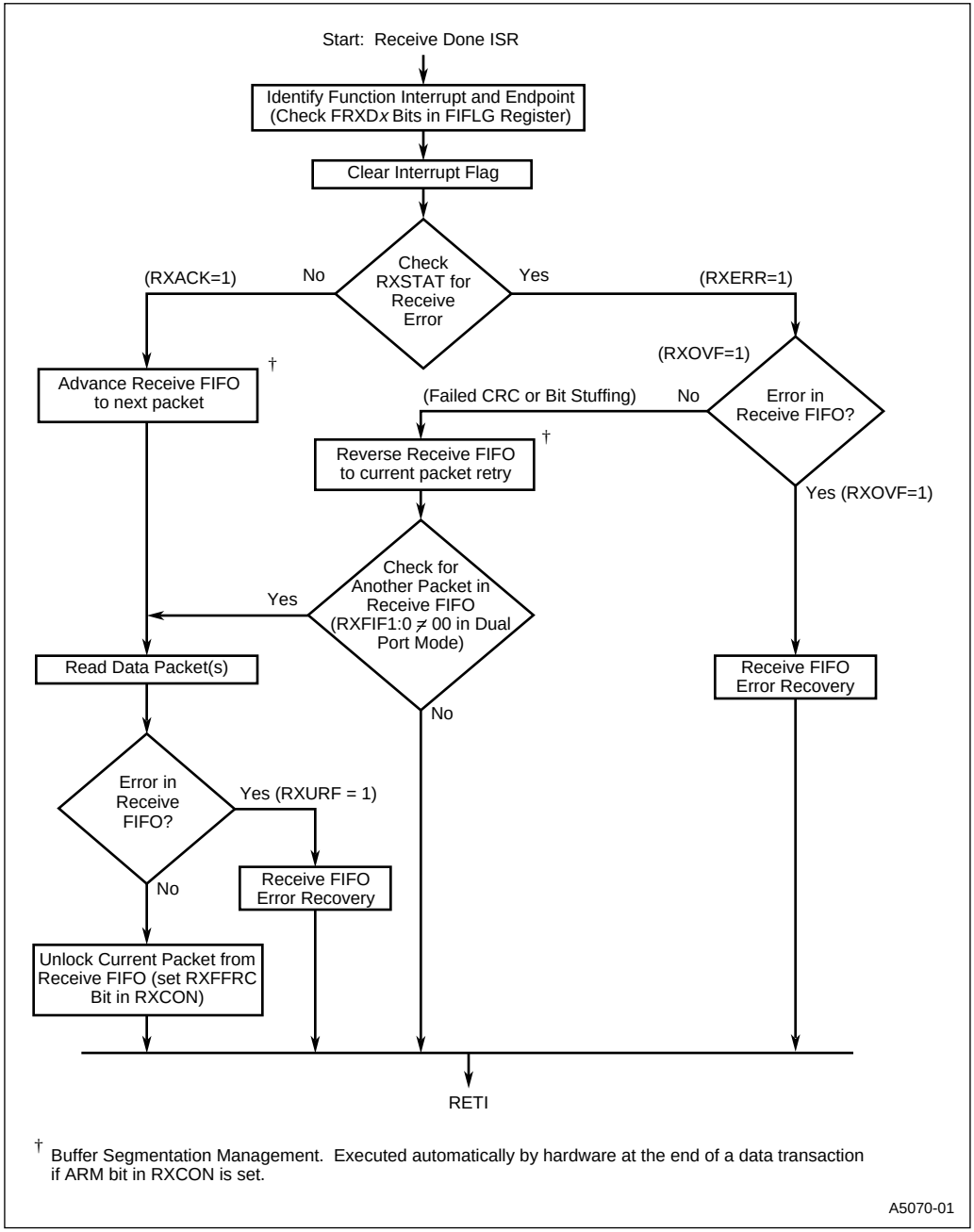

Figure 8-7. Post-receive ISR (Non-isochronous)

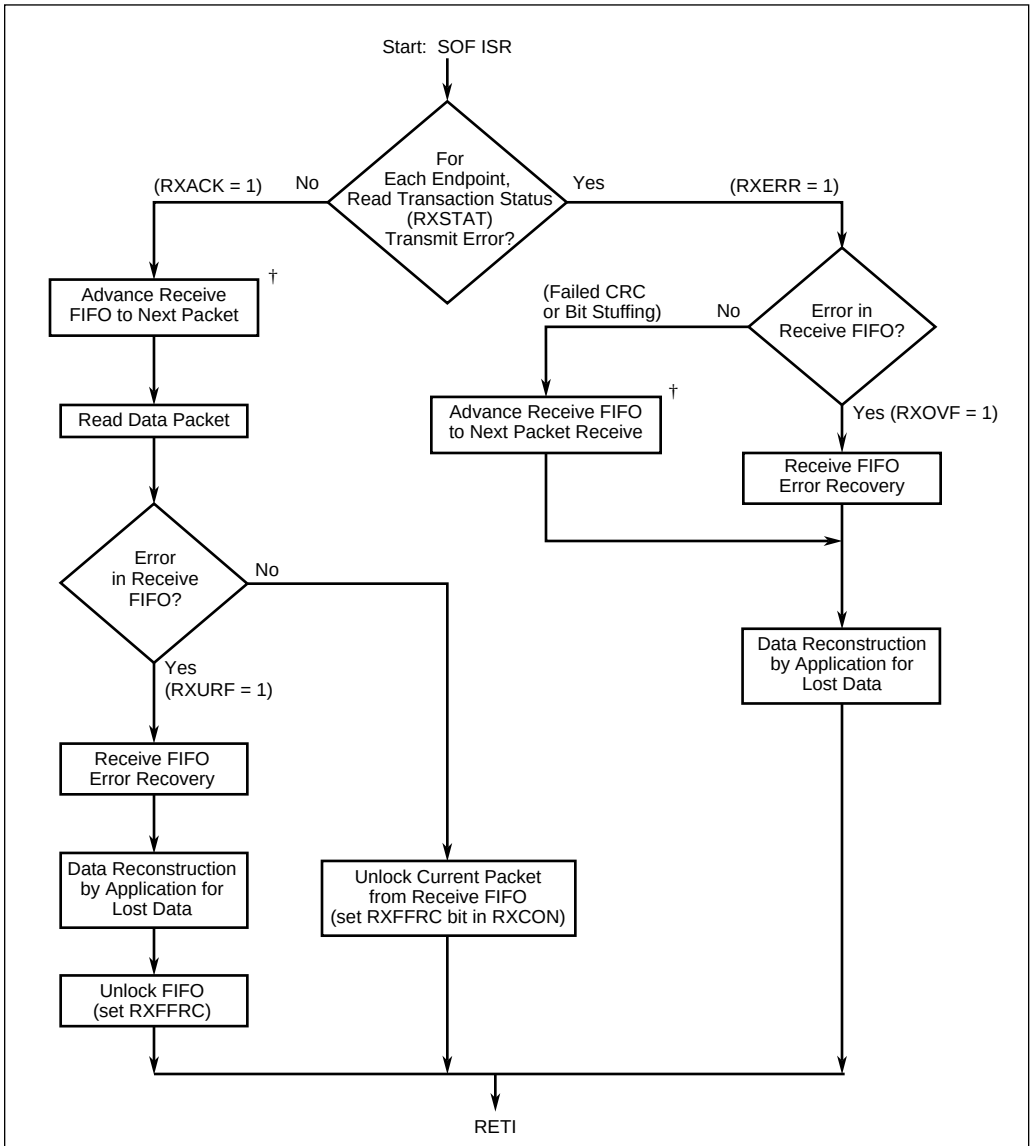

† Buffer Segmentation Management. Executed automatically by hardware at the end of a data transaction if ARM bit in TXCON is set. For isochronous transactions, there is no retry of current packet regardless of transaction status.

A5074-01

Figure 8-8. Receive SOF ISR (Isochronous)

8.4 SETUP TOKEN

An endpoint must be configured as a control endpoint in order to respond to SETUP tokens. (This will only be endpoint 0, since it must serve as a control endpoint.) Refer to the "Protocol Layer" section of the *Universal Serial Bus Specification* for details of SETUP token transactions and protocol.

A control data transfer is initiated by a valid SETUP token (i.e., the token PID received is good). Receive data transfer operations for a control endpoint are very similar to data transfers on non-control endpoints for non-setup tokens. However, the response of a control endpoint is different when it receives a setup token.

USB protocol specifies that setup tokens must be received and ACKed. Following receipt of a setup token, a control endpoint flushes the contents of the receive FIFO before writing it with received setup data. This may create an error condition in the FIFO due to the asynchronous nature of FIFO reads by the CPU and simultaneous writes by the function interface. Figure 8-9 illustrates the operations of a typical post-receive routine for a control endpoint.

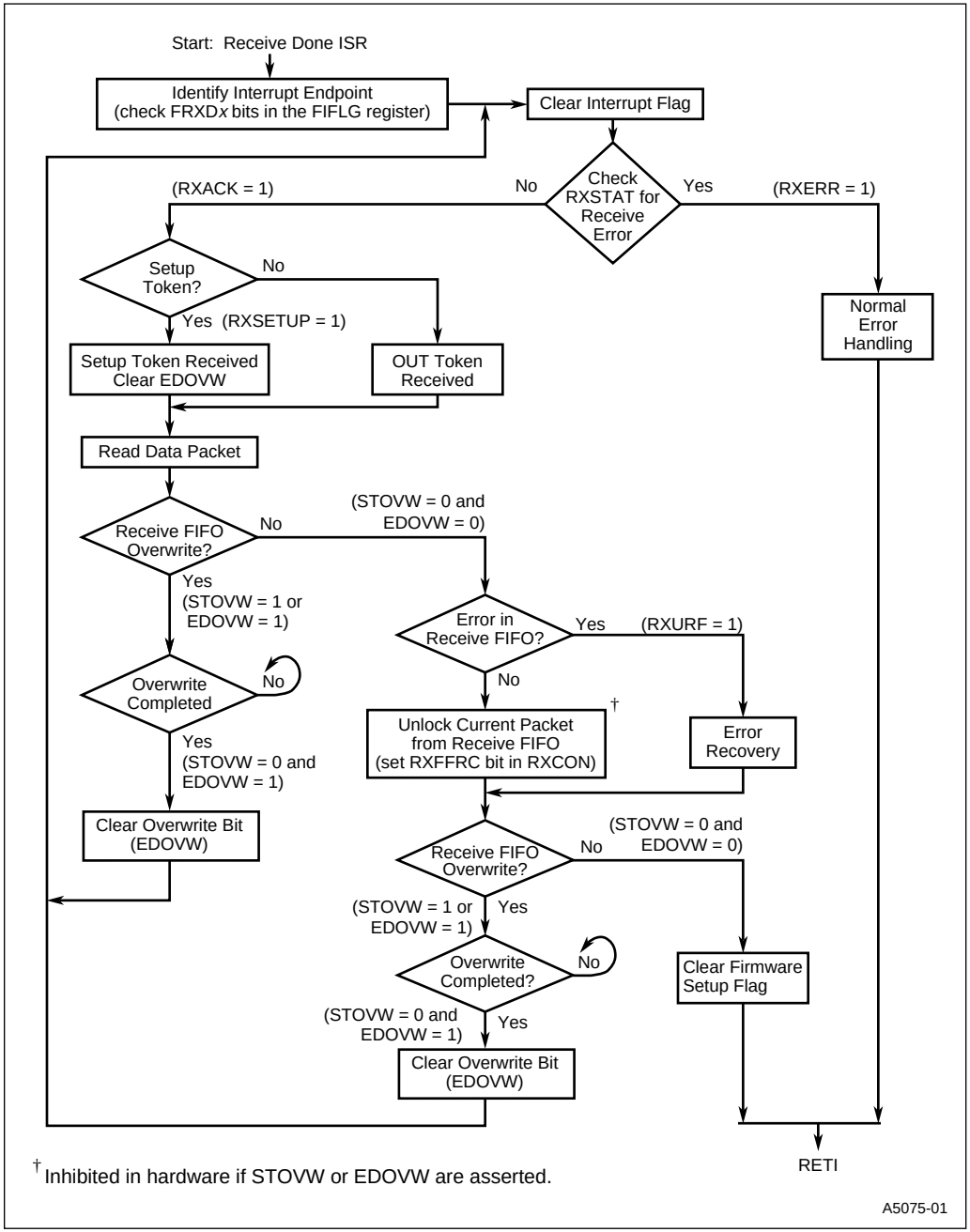

Figure 8-9. Post-receive ISR (Control)

8.5 START OF FRAME (SOF) TOKEN

Figure 8-10 illustrates the hardware operations performed by the function interface for a start of frame (SOF) token. The host issues an SOF token at a nominal rate of once every 1.0 ms. An SOF token is valid if the PID is good. The SOF token is not endpoint-specific; it should be received by every node on the bus.

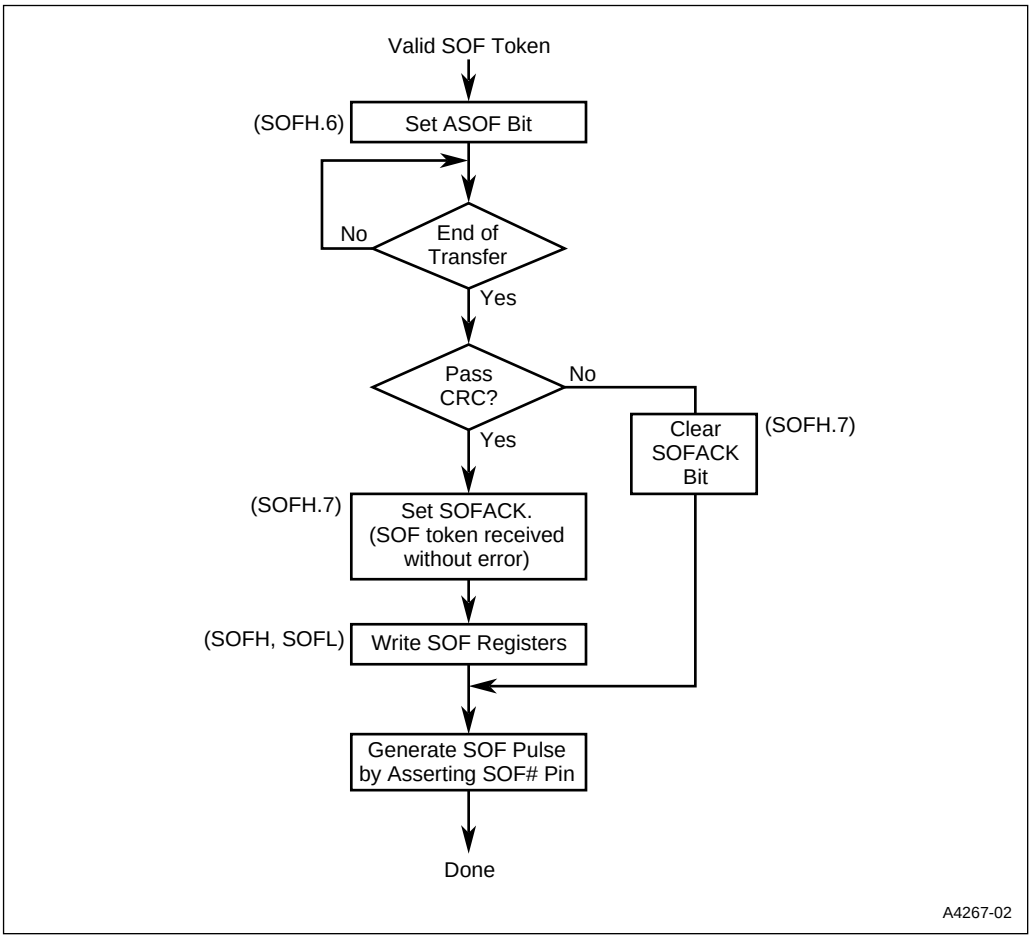

Figure 8-10. Hardware Operations for SOF Token

9

Input/Output Ports

CHAPTER 9
INPUT/OUTPUT PORTS

The 8X930A*x* has four 8-bit input/output (I/O) ports for general-purpose I/O, external memory operations, and specific alternate functions (see Table 9-1). This chapter describes the ports and provides information on port loading, read-modify-write instructions, and external memory accesses.

9.1 INPUT/OUTPUT PORT OVERVIEW

All four 8X930A*x* I/O ports are bidirectional. Each port contains a latch, an output driver, and an input buffer. Port 0 and port 2 output drivers and input buffers facilitate external memory operations. Port 0 drives the lower address byte onto the parallel address bus, and port 2 drives the upper address byte onto the bus. In nonpage mode, the data is multiplexed with the lower address byte on port 0. In page mode, the data is multiplexed with the upper address byte on port 2. Port 1 and port 3 provide both general-purpose I/O and special alternate functions.

Table 9-1. Input/Output Port Pin Descriptions

Pin Name	Type	Alternate Pin Name	Alternate Description	Alternate Type
P0.7:0	I/O	AD7:0	Address/Data (Nonpage Mode), Address (Page Mode)	I/O
P1.0	I/O	T2	Timer 2 Clock Input/Output	I/O
P1.1	I/O	T2EX	Timer 2 External Input	I
P1.2	I/O	ECI	PCA External Clock Input	I
P1.3	I/O	CEX0	PCA Module 0 I/O	I/O
P1.4	I/O	CEX1	PCA Module 1 I/O	I/O
P1.5	I/O	CEX2	PCA Module 2 I/O	I/O
P1.6	I/O	CEX3/WAIT#	PCA Module 3 I/O	I/O
P1.7	I/O	CEX4/A17/WCLK	PCA Module 4 I/O or 18th Address Bit	I/O(O)
P2.7:0	I/O	A15:8	Address (Nonpage Mode), Address/Data (Page Mode)	I/O
P3.0	I/O	RXD	Serial Port Receive Data Input	I (I/O)
P3.1	I/O	TXD	Serial Port Transmit Data Output	O (O)
P3.2	I/O	INT0#	External Interrupt 0	I
P3.3	I/O	INT1#	External Interrupt 1	I
P3.4	I/O	T0	Timer 0 Input	I
P3.5	I/O	T1	Timer 1 Input	I
P3.6	I/O	WR#	Write Signal to External Memory	O
P3.7	I/O	RD#/A16	Read Signal to External Memory or 17th Address Bit	O

9.2 I/O CONFIGURATIONS

Each port SFR operates via type-D latches, as illustrated in Figure 9-1 for ports 1 and 3. A CPU "write to latch" signal initiates transfer of internal bus data into the type-D latch. A CPU "read latch" signal transfers the latched Q output onto the internal bus. Similarly, a "read pin" signal transfers the logical level of the port pin. Some port data instructions activate the "read latch" signal while others activate the "read pin" signal. Latch instructions are referred to as read-modify-write instructions (see "Read-Modify-Write Instructions" on page 9-4). Each I/O line may be independently programmed as input or output.

9.3 PORT 1 AND PORT 3

Figure 9-1 shows the structure of ports 1 and 3, which have internal pullups. An external source can pull the pin low. Each port pin can be configured either for general-purpose I/O or for its alternate input or output function (Table 9-1).

To use a pin for general-purpose output, set or clear the corresponding bit in the P*x* register (*x* = 1, 3). To use a pin for general-purpose input, set the bit in the P*x* register. This turns off the output driver FET.

To configure a pin for its alternate function, set the bit in the P*x* register. When the latch is set, the "alternate output function" signal controls the output level (Figure 9-1). The operation of ports 1 and 3 is discussed further in "Quasi-bidirectional Port Operation" on page 9-5.

9.4 PORT 0 AND PORT 2

Ports 0 and 2 are used for general-purpose I/O or as the external address/data bus. Port 0, shown in Figure 9-2, differs from the other ports in not having internal pullups. Figure 9-3 on page 9-4 shows the structure of port 2. An external source can pull a port 2 pin low.

To use a pin for general-purpose output, set or clear the corresponding bit in the P*x* register (*x* = 0, 2). To use a pin for general-purpose input set the bit in the P*x* register to turn off the output driver FET.

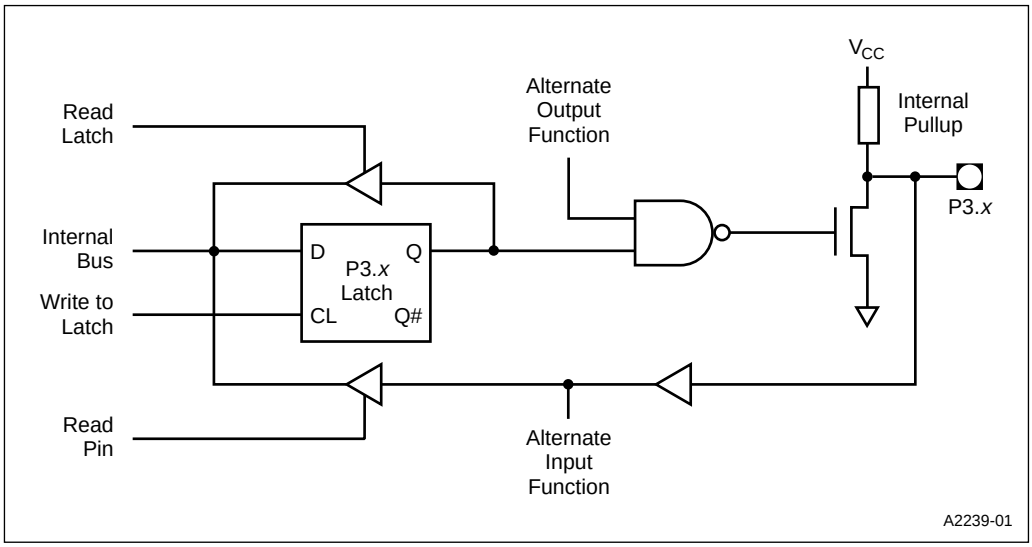

Figure 9-1. Port 1 and Port 3 Structure

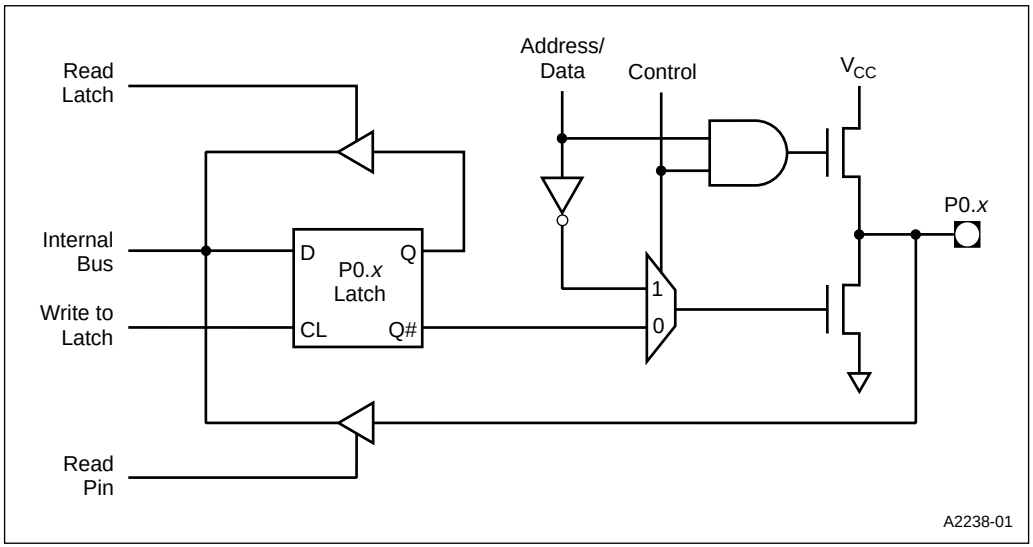

Figure 9-2. Port 0 Structure

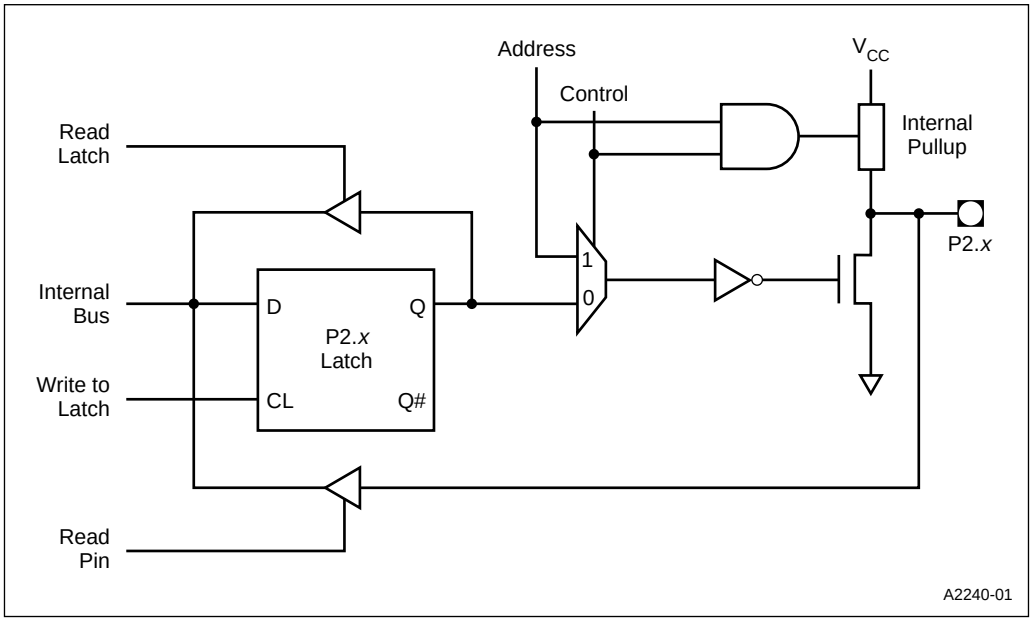

Figure 9-3. Port 2 Structure

When port 0 and port 2 are used for an external memory cycle, an internal control signal switches the output-driver input from the latch output to the internal address/data line. "External Memory Access" on page 9-6 discusses the operation of port 0 and port 2 as the external address/data bus.

NOTE

Port 0 and port 2 are precluded from use as general purpose I/O ports when used as address/data bus drivers.

Port 0 internal pullups assist the logic-one output for memory bus cycles only. Except for these bus cycles, the pullup FET is off. All other port 0 outputs are open drain.

9.5 READ-MODIFY-WRITE INSTRUCTIONS

Some instructions read the latch data rather than the pin data. The latch based instructions read the data, modify the data, and then rewrite the latch. These are called "read-modify-write" instructions. Below is a complete list of these special instructions. When the destination operand is a port, or a port bit, these instructions read the latch rather than the pin:

```
ANL            (logical AND, e.g., ANL P1, A)
ORL            (logical OR, e.g., ORL P2, A)
XRL            (logical EX-OR, e.g., XRL P3, A)
JBC            (jump if bit = 1 and clear bit, e.g., JBC P1.1, LABEL)
CPL            (complement bit, e.g., CPL P3.0)
INC            (increment, e.g., INC P2)
```

```
DEC             (decrement, e.g., DEC P2)
DJNZ            (decrement and jump if not zero, e.g., DJNZ P3, LABEL)
MOV PX.Y, C     (move carry bit to bit Y of port X)
CLR PX.Y        (clear bit Y of port X)
SETB PX.Y       (set bit Y of port x)
```

It is not obvious that the last three instructions in this list are read-modify-write instructions. These instructions read the port (all 8 bits), modify the specifically addressed bit, and write the new byte back to the latch. These read-modify-write instructions are directed to the latch rather than the pin in order to avoid possible misinterpretation of voltage (and therefore, logic) levels at the pin. For example, a port bit used to drive the base of an external bipolar transistor cannot rise above the transistor's base-emitter junction voltage (a value lower than V_{IL}). With a logic one written to the bit, attempts by the CPU to read the port at the pin are misinterpreted as logic zero. A read of the latch rather than the pin returns the correct logic-one value.

9.6 QUASI-BIDIRECTIONAL PORT OPERATION

Port 1, port 2, and port 3 have fixed internal pullups and are referred to as "quasi-bidirectional" ports. When configured as an input, the pin impedance appears as logic one and sources current (see the 8X930A*x* datasheet) in response to an external logic-zero condition. Port 0 is a "true bi-directional" pin. The pin floats when configured as input. Resets write logical one to all port latches. If logical zero is subsequently written to a port latch, it can be returned to input conditions by a logical one written to the latch. For additional electrical information, refer to the current 8X930A*x* datasheet.

NOTE

Port latch values change near the end of read-modify-write instruction cycles. Output buffers (and therefore the pin state) update early in the instruction after the read-modify-write instruction cycle.

Logical zero-to-one transitions in port 1, port 2, and port 3 utilize an additional pullup to aid this logic transition (see Figure 9-4). This increases switch speed. The extra pullup briefly sources 100 times the normal internal circuit current. The internal pullups are field-effect transistors rather than linear resistors. Pullups consist of three p-channel FET (pFET) devices. A pFET is on when the gate senses logical zero and off when the gate senses logical one. pFET #1 is turned on for two oscillator periods immediately after a zero-to-one transition in the port latch. A logic one at the port pin turns on pFET #3 (a weak pullup) through the inverter. This inverter and pFET pair form a latch to drive logic one. pFET #2 is a very weak pullup switched on whenever the associated nFET is switched off. This is a traditional CMOS switch convention. Current strengths are 1/10 that of pFET #3.

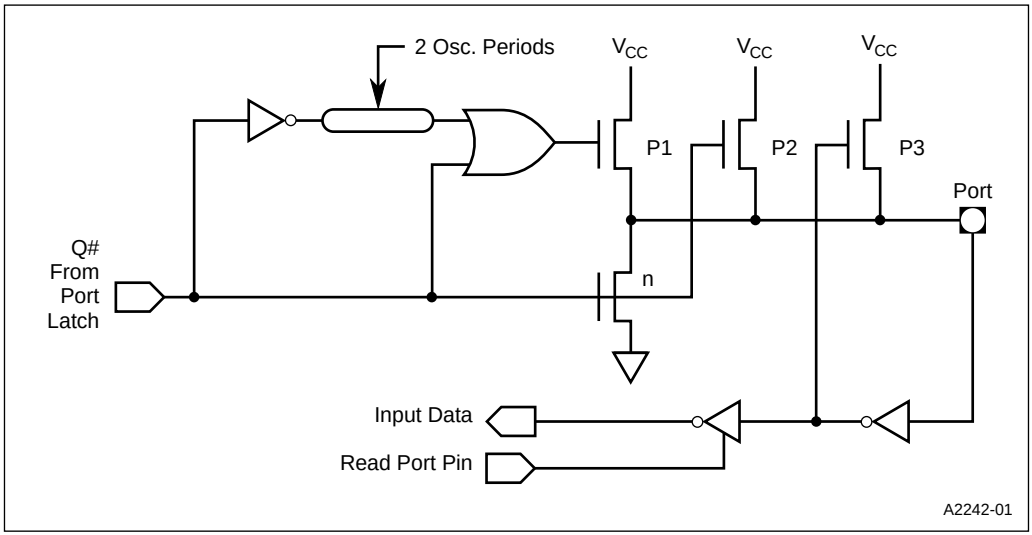

Figure 9-4. Internal Pullup Configurations

9.7 PORT LOADING

Output buffers of port 1, port 2, and port 3 can each sink 1.6 mA at logic zero (see V_{OL} specifications in the 8X930A*x* data sheet). These port pins can be driven by open-collector and open-drain devices. Logic zero-to-one transitions occur slowly as limited current pulls the pin to a logic-one condition (Figure 9-4 on page 9-6). A logic-zero input turns off pFET #3. This leaves only pFET #2 weakly in support of the transition. In external bus mode, port 0 output buffers each sink 3.2 mA at logic zero (see V_{OL1} in the 8X930A*x* data sheet). However, the port 0 pins require external pullups to drive external gate inputs. See the latest revision of the 8X930A*x* datasheet for complete electrical design information. External circuits must be designed to limit current requirements to these conditions.

9.8 EXTERNAL MEMORY ACCESS

The external bus structure is different for page mode and nonpage mode. In nonpage mode (used by MCS 51 microcontrollers), port 2 outputs the upper address byte; the lower address byte and the data are multiplexed on port 0. In page mode, the upper address byte and the data are multiplexed on port 2, while port 0 outputs the lower address byte.

The 8X930A*x* CPU writes FFH to the P0 register for all external memory bus cycles. This overwrites previous information in P0. In contrast, the P2 register is unmodified for external bus cycles. When address bits or data bits are not on the port 2 pins, the bit values in P2 appear on the port 2 pins.

In nonpage mode, port 0 uses a strong internal pullup FET to output ones or a strong internal pulldown FET to output zeros for the lower address byte and the data. Port 0 is in a high-impedance state for data input.

In page mode, port 0 uses a strong internal pullup FET to output ones or a strong internal pulldown FET to output zeros for the lower address byte or a strong internal pulldown FET to output zeros for the upper address byte.

In nonpage mode, port 2 uses a strong internal pullup FET to output ones or a strong internal pulldown FET to output zeros for the upper address byte. In page mode, port 2 uses a strong internal pullup FET to output ones or a strong internal pulldown FET to output zeros for the upper address byte and data. Port 2 is in a high-impedance state for data input.

NOTE

In external bus mode port 0 outputs do not require external pullups.

There are two types of external memory accesses: external program memory and external data memory (see Chapter 15, “External Memory Interface”). External program memories utilize signal PSEN# as a read strobe. MCS 51 microcontrollers use RD# (read) or WR# (write) to strobe memory for data accesses. Depending on its RD1:0 configuration bits, the 8X930A*x* uses PSEN# or RD# for data reads (See “Configuration Bits RD1:0” on page 4-8).

During instruction fetches, external program memory can transfer instructions with 16-bit addresses for binary-compatible code or with the external bus configured for extended memory addressing (17-bit or 18-bit).

External data memory transfers use an 8-, 16-, 17-, or 18-bit address bus, depending on the instruction and the configuration of the external bus. Table 9-2 lists the instructions that can be used for these bus widths.

Table 9-2. Instructions for External Data Moves

Bus Width	Instructions
8	MOVX @Ri; MOV @Rm; MOV dir8
16	MOVX @DPTR; MOV @WRj; MOV @WRj+dis; MOV dir16
17	MOV @DRk; MOV @DRk+dis
18	MOV @DRk; MOV @DRk+dis

NOTE

Avoid MOV P0 instructions for external memory accesses. These instructions can corrupt input code bytes at port 0.

External signal ALE (address latch enable) facilitates external address latch capture. The address byte is valid after the ALE pin drives V_{OL}. For write cycles, valid data is written to port 0 just prior to the write (WR#) pin asserting V_{OL}. Data remains valid until WR# is undriven. For read cycles, data returned from external memory must appear at port 0 before the read (RD#) pin is undriven (refer to the 8X930A*x* datasheet for specifications). Wait states, by definition, affect bus-timing.

10

Timer/Counters and WatchDog Timer

CHAPTER 10
TIMER/COUNTERS AND WATCHDOG TIMER

This chapter describes the timer/counters and the watchdog timer (WDT) included as peripherals on the 8X930A*x*. When operating as a timer, a timer/counter runs for a programmed length of time, then issues an interrupt request. When operating as a counter, a timer/counter counts negative transitions on an external pin. After a preset number of counts, the counter issues an interrupt request.

The watchdog timer provides a way to monitor system operation. It causes a system reset if a software malfunction allows it to expire. The watchdog timer is covered in "Watchdog Timer" on page 10-17.

10.1 TIMER/COUNTER OVERVIEW

The 8X930A*x* contains three general-purpose, 16-bit timer/counters. Although they are identified as timer 0, timer 1, and timer 2, you can independently configure each to operate in a variety of modes as a timer or as an event counter. Each timer employs two 8-bit timer registers, used separately or in cascade, to maintain the count. The timer registers and associated control and capture registers are implemented as addressable special function registers (SFRs). Four of the SFRs provide programmable control of the timers as follows:

- Timer/counter mode control register (TMOD) and timer/counter control register (TCON) control timer 0 and timer 1
- Timer/counter 2 mode control register (T2MOD) and timer/counter 2 control register (T2CON) control timer 2

Table 10-1 describes the external signals referred to in this chapter. Table 10-2 briefly describes the SFRs referred to in this chapter. For a map of the SFR address space, see Table 3-5 on page 3-16. Timer/Counter Operation

10.2 TIMER/COUNTER OPERATION

The block diagram in Figure 10-1 depicts the basic logic of the timers. Here timer registers TH*x* and TL*x* (*x* = 0, 1, and 2) connect in cascade to form a 16-bit timer. Setting the run control bit (TR*x*) turns the timer on by allowing the selected input to increment TL*x*. When TL*x* overflows it increments TH*x*; when TH*x* overflows it sets the timer overflow flag (TF*x*) in the TCON or T2CON register. Setting the run control bit does not clear the TH*x* and TL*x* timer registers. The timer registers can be accessed to obtain the current count or to enter preset values. Timer 0 and timer 1 can also be controlled by external pin INT*x*# to facilitate pulse width measurements.

The C\T*x*# control bit selects timer operation or counter operation by selecting the divided-down system clock or external pin T*x* as the source for the counted signal.

For timer operation (C/T*x*# = 0), the timer register counts the divided-down system clock. The timer register is incremented once every peripheral cycle, i.e., once every six states (see "Clock and Reset Unit" on page 2-7). Since six states equals 12 clock cycles, the timer clock rate is

F_{OSC}/12. Exceptions are the timer 2 baud rate and clock-out modes, where the timer register is incremented by the system clock divided by two.

NOTE

For the case of PLL on (PLLSEL2:0 =110), a peripheral cycle equals six T_{OSC} so the timer clock rate is F_{OSC} /6. For the timer 2 baud rate and clock-out modes, the timer register is incremented at the PLL rate (12 MHz). See "Clock and Reset Unit" on page 2-7.

For counter operation (C/T*x*# = 1), the timer register counts the negative transitions on the T*x* external input pin. The external input is sampled during every S5P2 state. "Clock and Reset Unit" on page 2-7 describes the notation for the states in a peripheral cycle. When the sample is high in one cycle and low in the next, the counter is incremented. The new count value appears in the register during the next S3P1 state after the transition was detected. Since it takes 12 states (24 oscillator periods) to recognize a negative transition, the maximum count rate is 1/24 of the oscillator frequency. There are no restrictions on the duty cycle of the external input signal, but to ensure that a given level is sampled at least once before it changes, it should be held for at least one full peripheral cycle.

Table 10-1. External Signals

Signal Name	Type	Description	Alternate Function
T2	I/O	**Timer 2 Clock Input/Output**. This signal is the external clock input for the timer 2 capture mode; and it is the timer 2 clock-output for the clock-out mode.	P1.0
T2EX	I	**Timer 2 External Input**. In timer 2 capture mode, a falling edge initiates a capture of the timer 2 registers. In auto-reload mode, a falling edge causes the timer 2 registers to be reloaded. In the up-down counter mode, this signal determines the count direction: high = up, low = down.	P1.1
INT1:0#	I	**External Interrupts 1:0**. These inputs set the IE1:0 interrupt flags in the TCON register. TCON bits IT1:0 select the triggering method: IT1:0 = 1 selects edge-triggered (high-to-low);IT1:0 = 0 selects level-triggered (active low). INT1:0# also serves as external run control for timer 1:0 when selected by TCON bits GATE1:0#.	P3.3:2
T1:0	I	**Timer 1:0 External Clock Inputs**. When timer 1:0 operates as a counter, a falling edge on the T1:0 pin increments the count.	P3.5:4

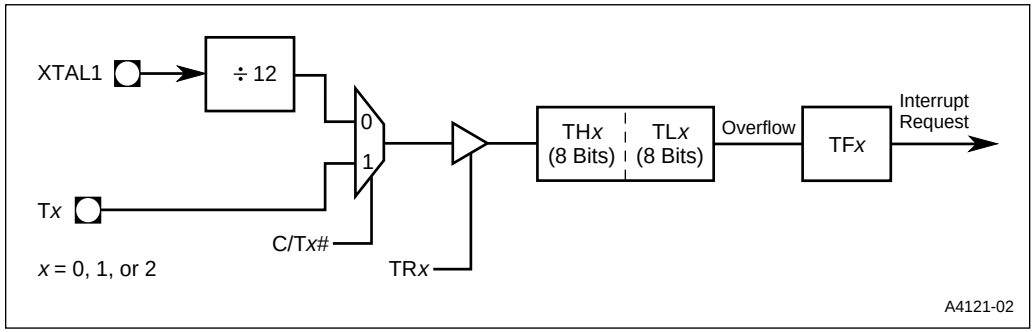

Figure 10-1. Basic Logic of the Timer/Counters †

† This figure depicts the case of PLL off (PLLSEL2:0 = 001 or 100). For the case of PLL on (PLLSEL2:0 = 110), the clock frequency at input 0 of the C/T*x*# selector is twice that for PLLSEL2:0 = 100 (PLL off). See Table 2-2 on page 2-8.

Table 10-2. Timer/Counter and Watchdog Timer SFRs

Mnemonic	Description	Address
TL0 TH0	**Timer 0 Timer Registers.** Used separately as 8-bit counters or in cascade as a 16-bit counter. Counts an internal clock signal with frequency $F_{OSC}/12$ (timer operation) or an external input (event counter operation).	S:8AH S:8CH
TL1 TH1	**Timer 1 Timer Registers.** Used separately as 8-bit counters or in cascade as a 16-bit counter. Counts an internal clock signal with frequency $F_{OSC}/12$ (timer operation) or an external input (event counter operation).	S:8BH S:8DH
TL2 TH2	**Timer 2 Timer Registers.** TL2 and TH2 connect in cascade to provide a 16-bit counter. Counts an internal clock signal with frequency $F_{OSC}/12$ (timer operation) or an external input (event counter operation).	S:CCH S:CDH
TCON	**Timer 0/1 Control Register.** Contains the run control bits, overflow flags, interrupt flags, and interrupt-type control bits for timer 0 and timer 1.	S:88H
TMOD	**Timer 0/1 Mode Control Register.** Contains the mode select bits, counter/timer select bits, and external control gate bits for timer 0 and timer 1.	S:89H
T2CON	**Timer 2 Control Register.** Contains the receive clock, transmit clock, and capture/reload bits used to configure timer 2. Also contains the run control bit, counter/timer select bit, overflow flag, external flag, and external enable for timer 2.	S:C8H
T2MOD	**Timer 2 Mode Control Register.** Contains the timer 2 output enable and down count enable bits.	S:C9H
RCAP2L RCAP2H	**Timer 2 Reload/Capture Registers (RCAP2L, RCAP2H).** Provide values to and receive values from the timer registers (TL2,TH2).	S:CAH S:CBH
WDTRST	**Watchdog Timer Reset Register (WDTRST).** Used to reset and enable the WDT.	S:A6H

10.3 TIMER 0

Timer 0 functions as either a timer or event counter in four modes of operation. Figures 10-2, 10-3, and 10-4 show the logical configuration of each mode.

Timer 0 is controlled by the four low-order bits of the TMOD register (Figure 10-5) and bits 5, 4, 1, and 0 of the TCON register (Figure 10-6). The TMOD register selects the method of timer gating (GATE0), timer or counter operation (T/C0#), and mode of operation (M10 and M00). The TCON register provides timer 0 control functions: overflow flag (TF0), run control (TR0), interrupt flag (IE0), and interrupt type control (IT0).

For normal timer operation (GATE0 = 0), setting TR0 allows TL0 to be incremented by the selected input. Setting GATE0 and TR0 allows external pin INT0# to control timer operation. This setup can be used to make pulse width measurements. See "Pulse Width Measurements" on page 10-11.

Timer 0 overflow (count rolls over from all 1s to all 0s) sets the TF0 flag generating an interrupt request.

10.3.1 Mode 0 (13-bit Timer)

Mode 0 configures timer 0 as a 13-bit timer which is set up as an 8-bit timer (TH0 register) with a modulo 32 prescalar implemented with the lower five bits of the TL0 register (Figure 10-2). The upper three bits of the TL0 register are indeterminate and should be ignored. Prescalar overflow increments the TH0 register.

10.3.2 Mode 1 (16-bit Timer)

Mode 1 configures timer 0 as a 16-bit timer with TH0 and TL0 connected in cascade (Figure 10-2). The selected input increments TL0.

10.3.3 Mode 2 (8-bit Timer With Auto-reload)

Mode 2 configures timer 0 as an 8-bit timer (TL0 register) that automatically reloads from the TH0 register (Figure 10-3). TL0 overflow sets the timer overflow flag (TF0) in the TCON register and reloads TL0 with the contents of TH0, which is preset by software. When the interrupt request is serviced, hardware clears TF0. The reload leaves TH0 unchanged. See “Auto-load Setup Example” on page 10-10.

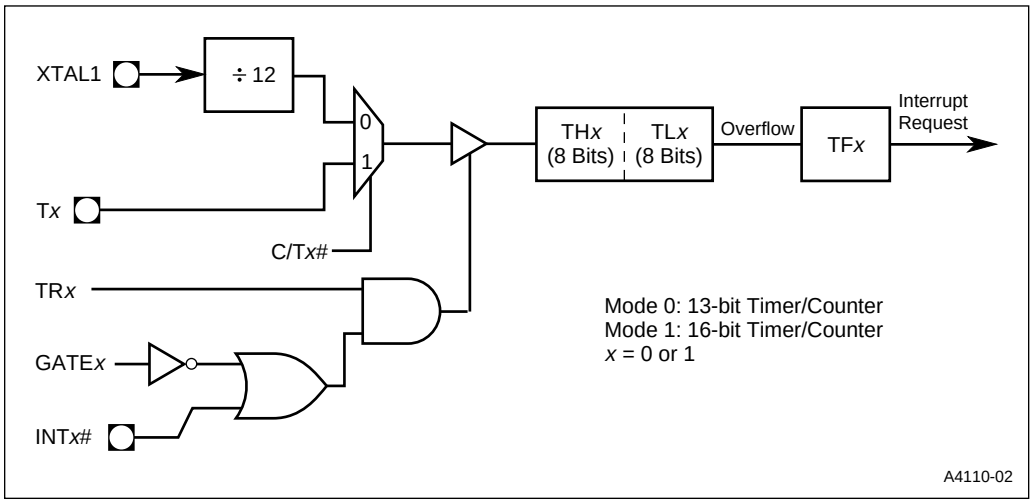

Figure 10-2. Timer 0/1 in Mode 0 and Mode 1 †

† This figure depicts the case of PLL off (PLLSEL2:0 = 001 or 100). For the case of PLL on (PLLSEL2:0 = 110), the clock frequency at input 0 of the C/T*x*# selector is twice that for PLLSEL2:0 = 100 (PLL off). See Table 2-2 on page 2-8.

10.3.4 Mode 3 (Two 8-bit Timers)

Mode 3 configures timer 0 such that registers TL0 and TH0 operate as separate 8-bit timers (Figure 10-4). This mode is provided for applications requiring an additional 8-bit timer or counter. TL0 uses the timer 0 control bits C/T0# and GATE0 in TMOD, and TR0 and TF0 in TCON in the normal manner. TH0 is locked into a timer function (counting F_{OSC} /12) and takes over use of the timer 1 interrupt (TF1) and run control (TR1) bits. Thus, operation of timer 1 is restricted when timer 0 is in mode 3. See "When timer 0 is in mode 3, it uses timer 1's overflow flag (TF1) and run control bit (TR1). For this situation, use timer 1 only for applications that do not require an interrupt (such as a baud rate generator for the serial interface port) and switch timer 1 in and out of mode 3 to turn it off and on." on page 10-7 and "Mode 3 (Halt)" on page 10-10.

10.4 TIMER 1

Timer 1 functions as either a timer or event counter in three modes of operation. Figures 10-2 and 10-3 show the logical configuration for modes 0, 1, and 2. Timer 1's mode 3 is a hold-count mode.

Timer 1 is controlled by the four high-order bits of the TMOD register (Figure 10-5) and bits 7, 6, 3, and 2 of the TCON register (Figure 10-6). The TMOD register selects the method of timer gating (GATE1), timer or counter operation (T/C1#), and mode of operation (M11 and M01). The TCON register provides timer 1 control functions: overflow flag (TF1), run control (TR1), interrupt flag (IE1), and interrupt type control (IT1).

Timer 1 operation in modes 0, 1, and 2 is identical to timer 0. Timer 1 can serve as the baud rate generator for the serial port. Mode 2 is best suited for this purpose.

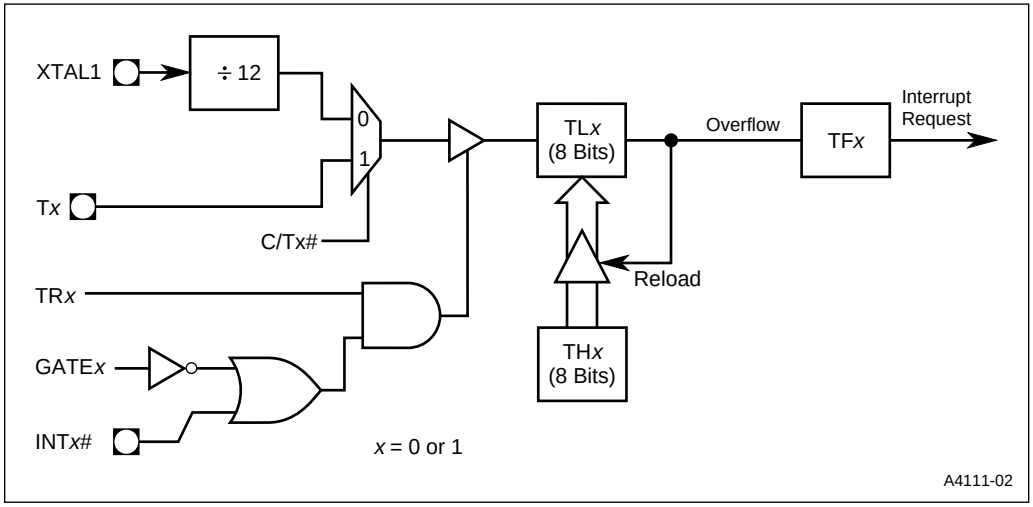

Figure 10-3. Timer 0/1 in Mode 2, Auto-Reload †

† This figure depicts the case of PLL off (PLLSEL2:0 = 001 or 100). For the case of PLL on (PLLSEL2:0 = 110), the clock frequency at input 0 of the C/T*x*# selector is twice that for PLLSEL2:0 = 100 (PLL off). See Table 2-2 on page 2-8.

For normal timer operation (GATE1 = 0), setting TR1 allows timer register TL1 to be incremented by the selected input. Setting GATE1 and TR1 allows external pin INT1# to control timer operation. This setup can be used to make pulse width measurements. See “Pulse Width Measurements” on page 10-11.

Timer 1 overflow (count rolls over from all 1s to all 0s) sets the TF1 flag, generating an interrupt request.

When timer 0 is in mode 3, it uses timer 1’s overflow flag (TF1) and run control bit (TR1). For this situation, use timer 1 only for applications that do not require an interrupt (such as a baud rate generator for the serial interface port) and switch timer 1 in and out of mode 3 to turn it off and on.

10.4.1 Mode 0 (13-bit Timer)

Mode 0 configures timer 0 as a 13-bit timer, which is set up as an 8-bit timer (TH1 register) with a modulo-32 prescalar implemented with the lower 5 bits of the TL1 register (Figure 10-2). The upper 3 bits of the TL1 register are ignored. Prescalar overflow increments the TH1 register.

10.4.2 Mode 1 (16-bit Timer)

Mode 1 configures timer 1 as a 16-bit timer with TH1 and TL1 connected in cascade (Figure 10-2). The selected input increments TL1.

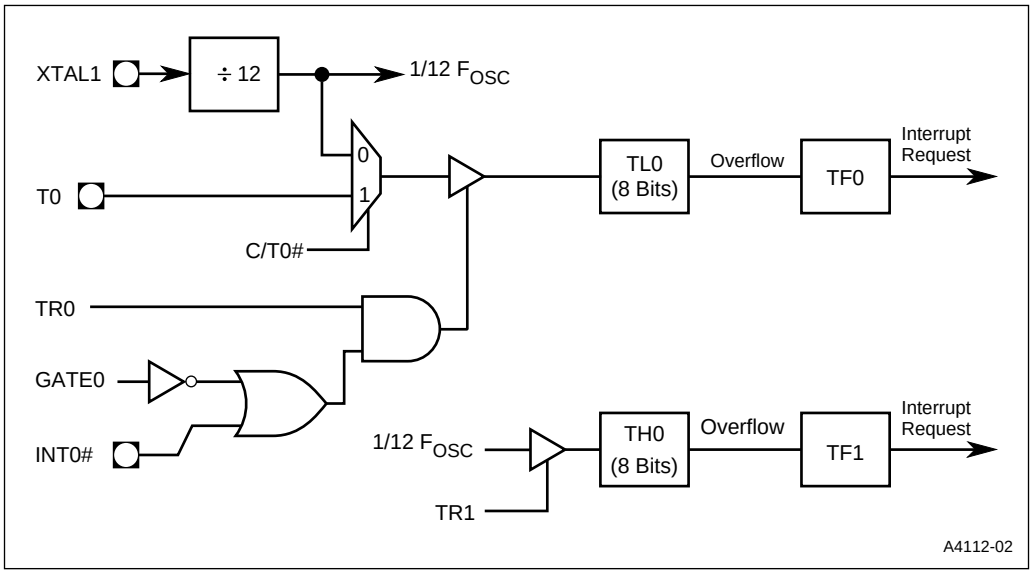

Figure 10-4. Timer 0 in Mode 3, Two 8-bit Timers †

† This figure depicts the case of PLL off (PLLSEL2:0 = 001 or 100). For the case of PLL on (PLLSEL2:0 = 110), the clock frequency at input 0 of the C/T*x*# selector is twice that for PLLSEL2:0 = 100 (PLL off). See Table 2-2 on page 2-8.

TMOD

Address: S:89H
Reset State: 0000 0000B

7							0
GATE1	C/T1#	M11	M01	GATE0	C/T0#	M10	M00

Bit Number	Bit Mnemonic	Function
7	GATE1	Timer 1 Gate: When GATE1 = 0, run control bit TR1 gates the input signal to the timer register. When GATE1 = 1 and TR1 = 1, external signal INT1 gates the timer input.
6	C/T1#	Timer 1 Counter/Timer Select: C/T1# = 0 selects timer operation: timer 1 counts the divided-down system clock. C/T1# = 1 selects counter operation: timer 1 counts negative transitions on external pin T1.
5, 4	M11, M01	Timer 1 Mode Select: **M11 M01** 0 0 Mode 0: 8-bit timer/counter (TH1) with 5-bit prescalar (TL1) 0 1 Mode 1: 16-bit timer/counter 1 0 Mode 2: 8-bit auto-reload timer/counter (TL1). Reloaded from TH1 at overflow. 1 1 Mode 3: Timer 1 halted. Retains count.
3	GATE0	Timer 0 Gate: When GATE0 = 0, run control bit TR0 gates the input signal to the timer register. When GATE0 = 1 and TR0 = 1, external signal INT0 gates the timer input.
2	C/T0#	Timer 0 Counter/Timer Select: C/T0# = 0 selects timer operation: timer 0 counts the divided-down system clock. C/T0# = 1 selects counter operation: timer 0 counts negative transitions on external pin T0.
1, 0	M10, M00	Timer 0 Mode Select: **M10 M00** 0 0 Mode 0: 8-bit timer/counter (T0) with 5-bit prescalar (TL0) 0 1 Mode 1: 16-bit timer/counter 1 0 Mode 2: 8-bit auto-reload timer/counter (TL0). Reloaded from TH0 at overflow. 1 1 Mode 3: TL0 is an 8-bit timer/counter. TH0 is an 8-bit timer using timer 1's TR1 and TF1 bits.

Figure 10-5. TMOD: Timer/Counter Mode Control Register

TCON

Address: S:88H
Reset State: 0000 0000B

7							0
TF1	TR1	TF0	TR0	IE1	IT1	IE0	IT0

Bit Number	Bit Mnemonic	Function
7	TF1	Timer 1 Overflow Flag: Set by hardware when the timer 1 register overflows. Cleared by hardware when the processor vectors to the interrupt routine.
6	TR1	Timer 1 Run Control Bit: Set/cleared by software to turn timer 1 on/off.
5	TF0	Timer 0 Overflow Flag: Set by hardware when the timer 0 register overflows. Cleared by hardware when the processor vectors to the interrupt routine.
4	TR0	Timer 0 Run Control Bit: Set/cleared by software to turn timer 1 on/off.
3	IE1	Interrupt 1 Flag: Set by hardware when an external interrupt is detected on the INT1# pin. Edge- or level- triggered (see IT1). Cleared when interrupt is processed if edge-triggered.
2	IT1	Interrupt 1 Type Control Bit: Set this bit to select edge-triggered (high-to-low) for external interrupt 1. Clear this bit to select level-triggered (active low).
1	IE0	Interrupt 1 Flag: Set by hardware when an external interrupt is detected on the INT0# pin. Edge- or level- triggered (see IT0). Cleared when interrupt is processed if edge-triggered.
0		Interrupt 0 Type Control Bit: Set this bit to select edge-triggered (high-to-low) for external interrupt 0. Clear this bit to select level-triggered (active low).

Figure 10-6. TCON: Timer/Counter Control Register

10.4.3 Mode 2 (8-bit Timer with Auto-reload)

Mode 2 configures timer 1 as an 8-bit timer (TL1 register) with automatic reload from the TH1 register on overflow (Figure 10-3). Overflow from TL1 sets overflow flag TF1 in the TCON register and reloads TL1 with the contents of TH1, which is preset by software. The reload leaves TH1 unchanged. See "Auto-load Setup Example" on page 10-10.

10.4.4 Mode 3 (Halt)

Placing timer 1 in mode 3 causes it to halt and hold its count. This can be used to halt timer 1 when the TR1 run control bit is not available (i.e., when timer 0 is in mode 3). See the final paragraph of "Timer 1" on page 10-6.

10.5 TIMER 0/1 APPLICATIONS

Timer 0 and timer 1 are general purpose timers that can be used in a variety of ways. The timer applications presented in this section are intended to demonstrate timer setup, and do not represent the only arrangement nor necessarily the best arrangement for a given task. These examples employ timer 0, but timer 1 can be set up in the same manner using the appropriate registers.

10.5.1 Auto-load Setup Example

Timer 0 can be configured as an eight-bit timer (TL0) with automatic reload as follows:

1. Program the four low-order bits of the TMOD register (Figure 10-5) to specify: mode 2 for timer 0, C/T0# = 0 to select $F_{OSC}/12$ (with PLL on, PLLSEL2:0 = 110, this becomes $F_{OSC}/6$) as the timer input, and GATE0 = 0 to select TR0 as the timer run control.
2. Enter an eight-bit initial value (n_0) in timer register TL0, so that the timer overflows after the desired number of peripheral cycles.
3. Enter an eight-bit reload value (n_R) in register TH0. This can be the same as n_0 or different, depending on the application.
4. Set the TR0 bit in the TCON register (Figure 10-6) to start the timer. Timer overflow occurs after FFH + 1 - n_0 peripheral cycles, setting the TF0 flag and loading n_R into TL0 from TH0. When the interrupt is serviced, hardware clears TF0.
5. The timer continues to overflow and generate interrupt requests every FFH + 1 - n_R peripheral cycles.
6. To halt the timer, clear the TR0 bit.

10.5.2 Pulse Width Measurements

For timer 0 and timer 1, setting GATE*x* and TR*x* allows an external waveform at pin INT*x*# to turn the timer on and off. This setup can be used to measure the width of a positive-going pulse present at pin INT*x*#. Pulse width measurements using timer 0 in mode 1 can be made as follows:

1. Program the four low-order bits of the TMOD register (Figure 10-5) to specify: mode 1 for timer 0, C/T0# = 0 to select $F_{OSC}/12$ as the timer input (with PLL on, PLLSEL2:0 = 110, this becomes $F_{OSC}/6$), and GATE0 = 1 to select INT0 as timer run control.
2. Enter an initial value of all zeros in the 16-bit timer register TH0/TL0, or read and store the current contents of the register.
3. Set the TR0 bit in the TCON register (Figure 10-6) to enable INT0.
4. Apply the pulse to be measured to pin INT0. The timer runs when the waveform is high.
5. Clear the TR0 bit to disable INT0.
6. Read timer register TH0/TL0 to obtain the new value.
7. Calculate pulse width as follows:
   a. For PLL off, pulse width = 12 T_{OSC} × (new value - initial value)
   b. For PLL on (PLLSEL2:0 = 110), pulse width = 24 T_{OSC} × (new value - initial value)
8. Example (with PLL off, PLLSEL2:0 = 100): F_{OSC} = 12 MHz and 12T_{OSC} = 1 µs. If the new value = $10{,}000_{10}$ and the initial value = 0, the pulse width = 1 µs × 10,000 = 10 ms.

10.6 TIMER 2

Timer 2 is a 16-bit timer/counter. The count is maintained by two 8-bit timer registers, TH2 and TL2, connected in cascade. The timer/counter 2 mode control register (T2MOD) as shown in Figure 10-11 on page 10-17) and the timer/counter 2 control register (T2CON) as shown in Figure 10-12 on page 10-18) control the operation of timer 2.

Timer 2 provides the following operating modes: capture mode, auto-reload mode, baud rate generator mode, and programmable clock-out mode. Select the operating mode with T2MOD and TCON register bits as shown in Table 10-3 on page 10-16. Auto-reload is the default mode. Setting RCLK and/or TCLK selects the baud rate generator mode.

Timer 2 operation is similar to timer 0 and timer 1. C/T2# selects the divided-down system clock (timer operation) or external pin T2 (counter operation) as the timer register input. Setting TF2 allows TL2 to be incremented by the selected input.

The operating modes are described in the following paragraphs. Block diagrams in Figures 10-7 through 10-10 show the timer 2 configuration for each mode.

10.6.1 Capture Mode

In the capture mode, timer 2 functions as a 16-bit timer or counter (Figure 10-7). An overflow condition sets bit TF2, which you can use to request an interrupt. Setting the external enable bit EXEN2 allows the RCAP2H and RCAP2L registers to capture the current value in timer registers TH2 and TL2 in response to a 1-to-0 transition at external input T2EX. The transition at T2EX also sets bit EXF2 in T2CON. The EXF2 bit, like TF2, can generate an interrupt.

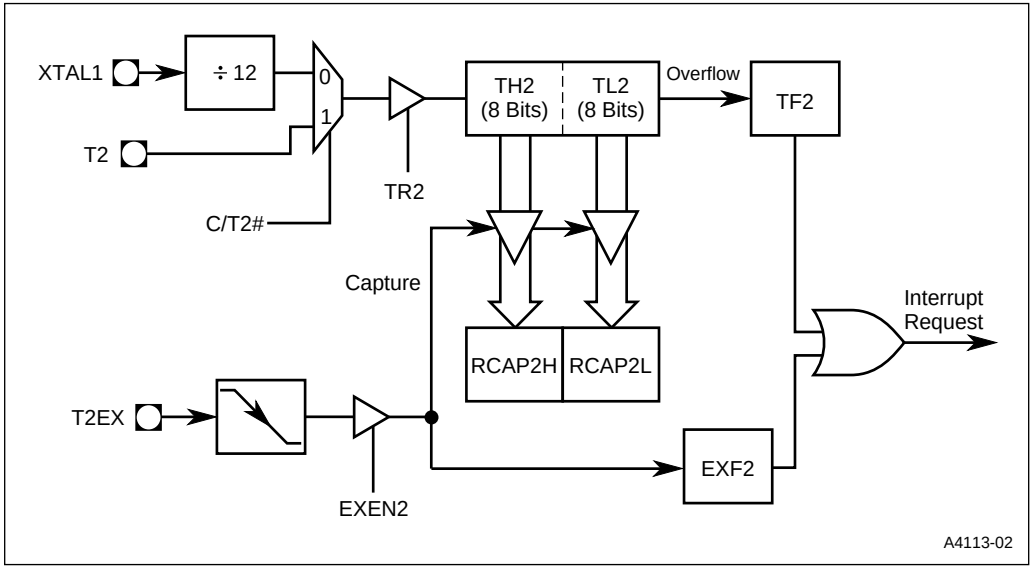

Figure 10-7. Timer 2: Capture Mode †

† This figure depicts the case of PLL off (PLLSEL2:0 = 001 or 100). For the case of PLL on (PLLSEL2:0 = 110), the clock frequency at input 0 of the C/T*x*# selector is twice that for PLLSEL2:0 = 100 (PLL off). See Table 2-2 on page 2-8.

10.6.2 Auto-reload Mode

The auto-reload mode configures timer 2 as a 16-bit timer or event counter with automatic reload. The timer operates an as an up counter or as an up/down counter, as determined by the down counter enable bit (DCEN). At device reset, DCEN is cleared, so in the auto-reload mode, timer 2 defaults to operation as an up counter.

10.6.2.1 Up Counter Operation

When DCEN = 0, timer 2 operates as an up counter (Figure 10-8). The external enable bit EXEN2 in the T2CON register provides two options (Figure 10-12). If EXEN2 = 0, timer 2 counts up to FFFFH and sets the TF2 overflow flag. The overflow condition loads the 16-bit value in the reload/capture registers (RCAP2H, RCAP2L) into the timer registers (TH2, TL2). The values in RCAP2H and RCAP2L are preset by software.

If EXEN2 = 1, the timer registers are reloaded by either a timer overflow or a high-to-low transition at external input T2EX. This transition also sets the EXF2 bit in the T2CON register. Either TF2 or EXF2 bit can generate a timer 2 interrupt request.

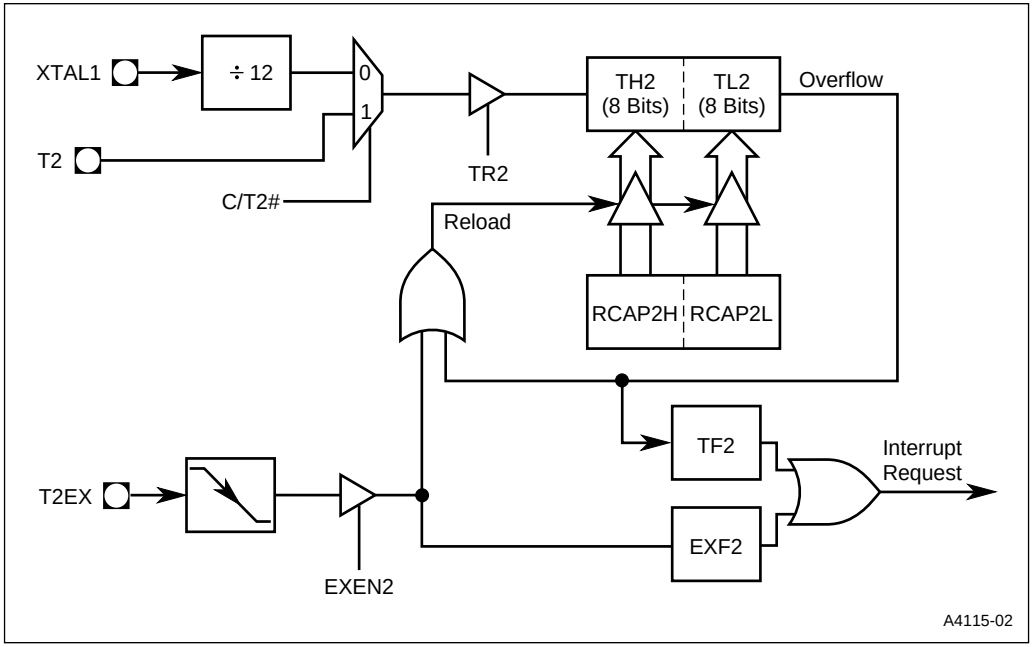

Figure 10-8. Timer 2: Auto Reload Mode (DCEN = 0) †

† This figure depicts the case of PLL off (PLLSEL2:0 = 001 or 100). For the case of PLL on (PLLSEL2:0 = 110), the clock frequency at input 0 of the C/T2# selector is twice that for PLLSEL2:0 = 100 (PLL off). See Table 2-2 on page 2-8.

10.6.3 Up/Down Counter Operation

When DCEN = 1, timer 2 operates as an up/down counter (Figure 10-9). External pin T2EX controls the direction of the count (Table 10-1 on page 10-2). When T2EX is high, timer 2 counts up. The timer overflow occurs at FFFFH which sets the timer 2 overflow flag (TF2) and generates an interrupt request. The overflow also causes the 16-bit value in RCAP2H and RCAP2L to be loaded into the timer registers TH2 and TL2.

When T2EX is low, timer 2 counts down. Timer underflow occurs when the count in the timer registers (TH2, TL2) equals the value stored in RCAP2H and RCAP2L. The underflow sets the TF2 bit and reloads FFFFH into the timer registers.

The EXF2 bit toggles when timer 2 overflows or underflows, changing the direction of the count. When timer 2 operates as an up/down counter, EXF2 does not generate an interrupt. This bit can be used to provide 17-bit resolution.

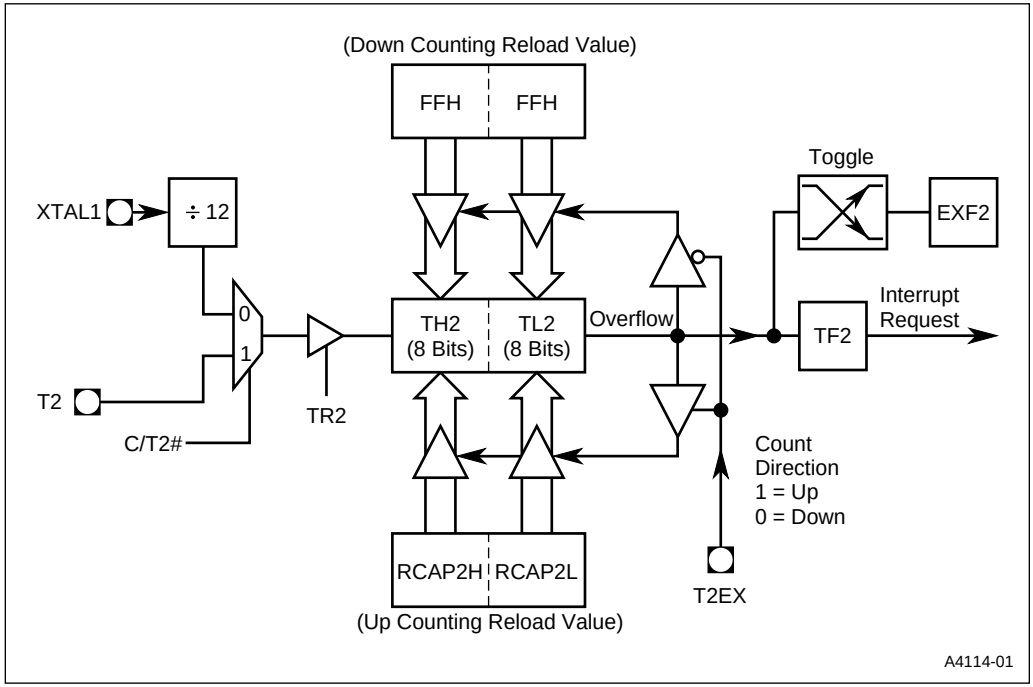

Figure 10-9. Timer 2: Auto Reload Mode (DCEN = 1) †

† This figure depicts the case of PLL off (PLLSEL2:0 = 001 or 100). For the case of PLL on (PLLSEL2:0 = 110), the clock frequency at input 0 of the C/T2# selector is twice that for PLLSEL2:0 = 100 (PLL off). See Table 2-2 on page 2-8.

10.6.4 Baud Rate Generator Mode

This mode configures timer 2 as a baud rate generator for use with the serial port. Select this mode by setting the RCLK and/or TCLK bits in T2CON. See Table 10-3. For details regarding this mode of operation, refer to “Baud Rates” on page 12-10.

10.6.5 Clock-out Mode

In the clock-out mode, timer 2 functions as a 50%-duty-cycle, variable-frequency clock (Figure 10-10). The input clock increments TL0 at $F_{OSC}/2$ for PLL off or F_{OSC} for PLL on. The timer repeatedly counts to overflow from a preloaded value. At overflow, the contents of the RCAP2H and RCAP2L registers are loaded into TH2/TL2. In this mode, timer 2 overflows do not generate interrupts. The formula gives the clock-out frequency as a function of the system oscillator frequency and the value in the RCAP2H and RCAP2L registers:

$$\text{For PLL off, Clock-out Frequency} = \frac{F_{OSC}}{4 \times (65535 - \text{RCAP2H, RCAP2L})}$$

$$\text{For PLL on, Clock-out Frequency} = \frac{F_{OSC}}{2 \times (65535 - \text{RCAP2H, RCAP2L})}$$

For a 12 MHz system clock with PLL off, timer 2 has a programmable frequency range of 47.8 Hz to 3 MHz. The generated clock signal is brought out to the T2 pin.

Timer 2 is programmed for the clock-out mode as follows:

1. Set the T2OE bit in T2MOD. This gates the timer register overflow to the ÷2 counter.
2. Clear the C/T2# bit in T2CON to select $F_{OSC}/2$ (PLL off) or F_{OSC} (PLL on) as the timer input signal. This also gates the output of the ÷2 counter to pin T2.
3. Determine the 16-bit reload value from the formula and enter in the RCAP2H/RCAP2L registers.
4. Enter a 16-bit initial value in timer register TH2/TL2. This can be the same as the reload value, or different, depending on the application.
5. To start the timer, set the TR2 run control bit in T2CON.

Operation is similar to timer 2 operation as a baud rate generator. It is possible to use timer 2 as a baud rate generator and a clock generator simultaneously. For this configuration, the baud rates and clock frequencies are not independent since both functions use the values in the RCAP2H and RCAP2L registers.

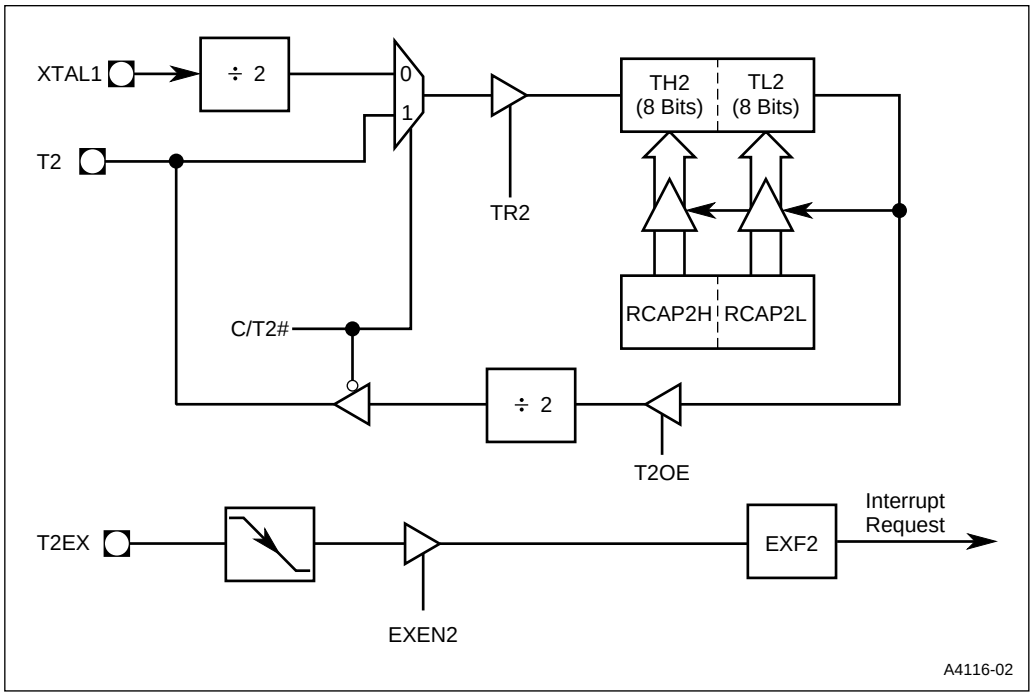

Figure 10-10. Timer 2: Clock Out Mode †

Table 10-3. Timer 2 Modes of Operation

Mode	RCLK OR TCLK (in T2CON)	CP/RL2# (in T2CON)	T2OE (in T2MOD)
Auto-reload Mode	0	0	0
Capture Mode	0	1	0
Baud Rate Generator Mode	1	X	X
Programmable Clock-Out	X	0	1

† This figure depicts the case of PLL off (PLLSEL2:0 = 001 or 100). For the case of PLL on (PLLSEL2:0 = 110), the clock frequency at input 0 of the C/T2# selector is twice that for PLLSEL2:0 = 100 (PLL off). See Table 2-2 on page 2-8.

T2MOD Address: S:C9H
Reset State: XXXX XX00B

7							0
—	—	—	—	—	—	T2OE	DCEN

Bit Number	Bit Mnemonic	Function
7:2	—	Reserved: Values read from these bits are indeterminate. Write zeros to these bits.
1	T2OE	Timer 2 Output Enable Bit: In the timer 2 clock-out mode, connects the programmable clock output to external pin T2.
0	DCEN	Down Count Enable Bit: Configures timer 2 as an up/down counter.

Figure 10-11. T2MOD: Timer 2 Mode Control Register

10.7 WATCHDOG TIMER

The peripheral section of the 8X930A*x* contains a dedicated, hardware watchdog timer (WDT) that automatically resets the chip if it is allowed to time out. The WDT provides a means of recovering from routines that do not complete successfully due to software malfunctions. The WDT described in this section is not associated with the PCA watchdog timer, which is implemented in software.

10.7.1 Description

The WDT is a 14-bit counter that counts peripheral cycles, i.e., (F_{OSC}/12 with PLL off; F_{OSC}/6 with PLL on). The WDTRST special function register at address S:A6H provides control access to the WDT. Two operations control the WDT:

- Device reset clears and disables the WDT (see “Reset” on page 13-4).
- Writing a specific two-byte sequence to the WDTRST register clears and enables the WDT.

If it is not cleared, the WDT overflows on count 3FFFH + 1. With PLL off and F_{OSC} = 12 MHz, a peripheral cycle is 1 µs and the WDT overflows in 1 µs × 16384 = 16.384 ms. With PLL on and F_{OSC} = 12 MHz, a peripheral cycle is 0.5 µs and the WDT overflows in 0.5 µs × 16384 = 8.192 ms.

The WDTRST is a write-only register. Attempts to read it return FFH. The WDT itself is not read or write accessible. The WDT does **not** drive the external RESET pin.

T2CON

Address: S:C8H
Reset State: 0000 0000B

7							0
TF2	EXF2	RCLK	TCLK	EXEN2	TR2	C/T2#	CP/RL2#

Bit Number	Bit Mnemonic	Function
7	TF2	Timer 2 Overflow Flag: Set by timer 2 overflow. Must be cleared by software. TF2 is not set if RCLK = 1 or TCLK = 1.
6	EXF2	Timer 2 External Flag: If EXEN2 = 1, capture or reload caused by a negative transition on T2EX sets EFX2. EXF2 does not cause an interrupt in up/down counter mode (DCEN = 1).
5	RCLK	Receive Clock Bit: Selects timer 2 overflow pulses (RCLK = 1) or timer 1 overflow pulses (RCLK = 0) as the baud rate generator for serial port modes 1 and 3.
4	TCLK	Transmit Clock Bit: Selects timer 2 overflow pulses (TCLK = 1) or timer 1 overflow pulses (TCLK = 0) as the baud rate generator for serial port modes 1 and 3.
3	EXEN2	Timer 2 External Enable Bit: Setting EXEN2 causes a capture or reload to occur as a result of a negative transition on T2EX unless timer 2 is being used as the baud rate generator for the serial port. Clearing EXEN2 causes timer 2 to ignore events at T2EX.
2	TR2	Timer 2 Run Control Bit: Setting this bit starts the timer.
1	C/T2#	Timer 2 Counter/Timer Select: C/T2# = 0 selects timer operation: timer 2 counts the divided-down system clock. C/T2# = 1 selects counter operation: timer 2 counts negative transitions on external pin T2.
0	CP/RL2#	Capture/Reload Bit: When set, captures occur on negative transitions at T2EX if EXEN2 = 1. When cleared, auto-reloads occur on timer 2 overflows or negative transitions at T2EX if EXEN2 = 1. The CP/RL2# bit is ignored and timer 2 forced to auto-reload on timer 2 overflow, if RCLK = 1 or TCLK = 1.

Figure 10-12. T2CON: Timer 2 Control Register

10.7.2 Using the WDT

To use the WDT to recover from software malfunctions, the user program should control the WDT as follows:

1. Following device reset, write the two-byte sequence 1EH-E1H to the WDTRST register to enable the WDT. The WDT begins counting from 0.
2. Repeatedly for the duration of program execution, write the two-byte sequence 1EH-E1H to the WDTRST register to clear and enable the WDT before it overflows. The WDT starts over at 0.

If the WDT overflows, it initiates a device reset (see “Reset” on page 13-4). Device reset clears the WDT and disables it.

10.7.3 WDT During Idle Mode

Operation of the WDT during the power reduction modes deserves special attention. The WDT continues to count while the microcontroller is in idle mode. This means the user must service the WDT during idle. One approach is to use a peripheral timer to generate an interrupt request when the timer overflows. The interrupt service routine then clears the WDT, reloads the peripheral timer for the next service period, and puts the microcontroller back into idle.

10.7.4 WDT During PowerDown

The powerdown mode stops all phase clocks. This causes the WDT to stop counting and to hold its count. The WDT resumes counting from where it left off if the powerdown mode is terminated by INT0/INT1. To ensure that the WDT does not overflow shortly after exiting the powerdown mode, clear the WDT just before entering powerdown. The WDT is cleared and disabled if the powerdown mode is terminated by a reset.

11

Programmable Counter Array

CHAPTER 11
PROGRAMMABLE COUNTER ARRAY

This chapter describes the programmable counter array (PCA), an on-chip peripheral of the 8X930A*x* that performs a variety of timing and counting operations, including pulse width modulation (PWM). The PCA provides the capability for a software watchdog timer (WDT).

11.1 PCA DESCRIPTION

The programmable counter array (PCA) consists of a 16-bit timer/counter and five 16-bit compare/capture modules. The timer/counter serves as a common time base and event counter for the compare/capture modules, distributing the current count to the modules by means of a 16-bit bus. A special function register (SFR) pair, CH/CL, maintains the count in the timer/counter, while five SFR pairs, CCAP*x*H/CCAP*x*L, store values for the modules (see Figure 11-1). Additional SFRs provide control and mode select functions as follows:

- The PCA timer/counter mode register (CMOD) and the PCA timer/counter control register (CCON) control the operation of the timer/counter. See Figure 11-7 on page 11-13 and Figure 11-8 on page 11-14.
- Five PCA module mode registers (CCAPM*x*) specify the operating modes of the compare/capture modules. See Figure 11-9 on page 11-15.

For a list of SFRs associated with the PCA, see Table 11-1. For an SFR address map, see Table 3-5 on page 3-16. Port 1 provides external I/O for the PCA on a shared basis with other functions. Table 11-2 identifies the port pins associated with the timer/counter and compare/capture modules. When not used for PCA I/O, these pins can be used for standard I/O functions.

The operating modes of the five compare/capture modules determine the functions performed by the PCA. Each module can be independently programmed to provide input capture, output compare, or pulse width modulation. Module 4 only also has a watchdog-timer mode.

The PCA timer/counter and the five compare/capture modules share a single interrupt vector. The EC bit in the IEN0 special function register is a global interrupt enable for the PCA. Capture events, compare events in some modes, and PCA timer/counter overflows set flags in the CCON register. Setting the overflow flag (CF) generates a PCA interrupt request if the PCA timer/counter interrupt enable bit (ECF) in the CMOD register is set (Figure 11-1). Setting a compare/capture flag (CCF*x*) generates a PCA interrupt request if the ECCF*x* interrupt enable bit in the corresponding CCAPM*x* register is set (Figures 11-2 and 11-3). For a description of the 8X930A*x* interrupt system see Chapter 6, “Interrupt System.”

11.1.1 Alternate Port Usage

PCA modules 3 and 4 share port pins with the real-time wait state and address functions as follows:

- PCA module 3 — P1.6/CEX3/WAIT#
- PCA module 4 — P1.7/CEX4/A17/WCLK

When the real-time wait state functions are enabled (using the WCON register), the corresponding PCA modules are automatically disabled. Configuring the 8X930A*x* to use address line A17 (specified by UCONFIG0, bits RD1:0) overrides the PCA module 3 and WCLK functions. When a real-time wait state function is enabled, do not use the corresponding PCA module.

NOTE

It is not advisable to alternate between PCA operations and real-time wait state operations at port 1.6 (CEX3/WAIT#) or port 1.7 (CEX4/WCLK). See "External Bus Cycles with Real-time Wait States" on page 15-11.

11.2 PCA TIMER/COUNTER

Figure 11-1 depicts the basic logic of the timer/counter portion of the PCA. The CH/CL special function register pair operates as a 16-bit timer/counter. The selected input increments the CL (low byte) register. When CL overflows, the CH (high byte) register increments after two oscillator periods; when CH overflows it sets the PCA overflow flag (CF in the CCON register) generating a PCA interrupt request if the ECF bit in the CMOD register is set.

The CPS1 and CPS0 bits in the CMOD register select one of four signals as the input to the timer/counter (Figure 11-7 on page 11-13):

- $F_{OSC}/12$. Provides a clock pulse at S5P2 of every peripheral cycle. With PLLSEL2:0 = 100 and F_{OSC} = 12 MHz, the timer/counter increments every 1000 nanoseconds. With PLLSEL2:0 = 110 and F_{OSC} = 12 MHz, the timer/counter increments every 500 nanoseconds.
- $F_{OSC}/4$. Provides clock pulses at S1P2, S3P2, and S5P2 of every peripheral cycle. With PLLSEL2:0 = 100 and F_{OSC} = 12 MHz, the timer/counter increments every 333 1/3 nanoseconds. With PLLSEL2:0 = 110 and F_{OSC} = 12 MHz, the timer/counter increments every 166 2/3 nanoseconds.
- Timer 0 overflow. The CL register is incremented at S5P2 of the peripheral cycle when timer 0 overflows. This selection provides the PCA with a programmable frequency input.
- External signal on P1.2/ECI. The CPU samples the ECI pin at S1P2, S3P2, and S5P2 of every peripheral cycle. The first clock pulse (S1P2, S3P2, or S5P2) that occurs following a high-to-low transition at the ECI pin increments the CL register. The maximum input frequency for this input selection is $F_{OSC}/8$.

For a description of peripheral cycle timing, see "Clock and Reset Unit" on page 2-7.

Setting the run control bit (CR in the CCON register) turns the PCA timer/counter on, if the output of the NAND gate (Figure 11-1) equals logic 1. The PCA timer/counter continues to operate during idle mode unless the CIDL bit of the CMOD register is set. The CPU can read the contents of the CH and CL registers at any time. However, writing to them is inhibited while they are counting (i.e., when the CR bit is set).

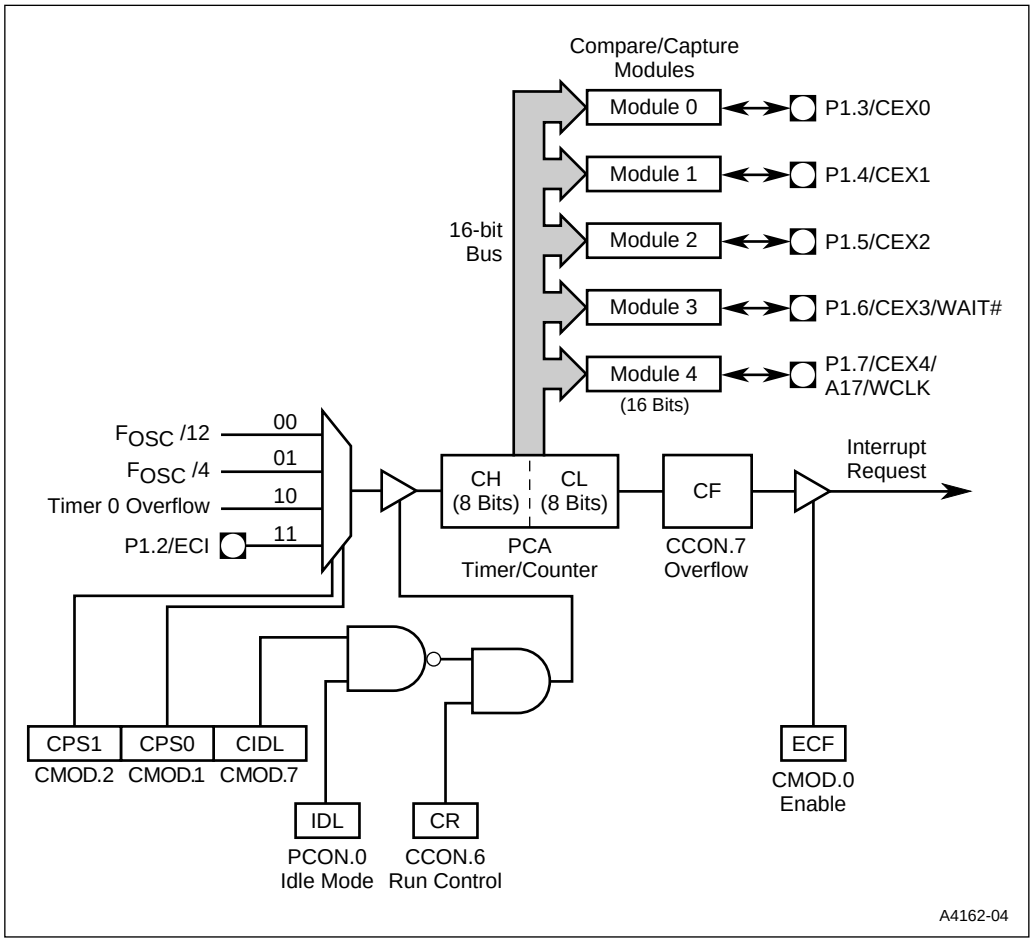

Figure 11-1. Programmable Counter Array†

† This figure depicts the case of PLL off (PLLSEL2:0 = 001 or 100). For the case of PLL on (PLLSEL2:0 = 110), the clock frequencies at inputs 00 and 01 of the CPS*x* selector are twice that for PLLSEL2:0 = 100 (PLL off). See Table 2-2 on page 2-8.

Table 11-1. PCA Special Function Registers (SFRs)

Mnemonic	Description	Address
CL CH	**PCA Timer/Counter.** These registers serve as a common 16-bit timer or event counter for the five compare/capture modules. Counts $F_{OSC}/12$, $F_{OSC}/4$, timer 0 overflow, or the external signal on P1.2/ECI, as selected by CMOD. In PWM mode CL operates as an 8-bit timer.	S:E9H S:F9H
CCON	**PCA Timer/Counter Control Register.** Contains the run control bit and the overflow flag for the PCA timer/counter, and interrupt flags for the five compare/capture modules.	S:D8H
CMOD	**PCA Timer/Counter Mode Register.** Contains bits for disabling the PCA timer/counter during idle mode, enabling the PCA watchdog timer (module 4), selecting the timer/counter input, and enabling the PCA timer/counter overflow interrupt.	S:D9H
CCAP0H CCAP0L	**PCA Module 0 Compare/Capture Registers**. This register pair stores the comparison value or the captured value. In the PWM mode, the low-byte register controls the duty cycle of the output waveform.	S:FAH S:EAH
CCAP1H CCAP1L	**PCA Module 1 Compare/Capture Registers**. This register pair stores the comparison value or the captured value. In the PWM mode, the low-byte register controls the duty cycle of the output waveform.	S:FBH S:EBH
CCAP2H CCAP2L	**PCA Module 2 Compare/Capture Registers**. This register pair stores the comparison value or the captured value. In the PWM mode, the low-byte register controls the duty cycle of the output waveform.	S:FCH S:ECH
CCAP3H CCAP3L	**PCA Module 3 Compare/Capture Registers**. This register pair stores the comparison value or the captured value. In the PWM mode, the low-byte register controls the duty cycle of the output waveform.	S:FDH S:EDH
CCAP4H CCAP4L	**PCA Module 4 Compare/Capture Registers**. This register pair stores the comparison value or the captured value. In the PWM mode, the low-byte register controls the duty cycle of the output waveform.	S:FEH S:EEH
CCAPM0 CCAPM1 CCAPM2 CCAPM3 CCAPM4	**PCA Compare/Capture Module Mode Registers.** Contain bits for selecting the operating mode of the compare/capture modules and enabling the compare/capture flag. See Table 11-3 on page 11-14 for mode select bit combinations.	S:DAH S:DBH S:DCH S:DDH S:DEH

Table 11-2. External Signals

Signal Name	Type	Description	Alternate Function
ECI	I	**PCA Timer/counter External Input**. This signal is the external clock input for the PCA timer/counter.	P1.2
CEX0 CEX1 CEX2 CEX3 CEX4	I/O	**Compare/Capture Module External I/O.** Each compare/capture module connects to a Port 1 pin for external I/O. When not used by the PCA, these pins can handle standard I/O.	P1.3 P1.4 P1.5 P1.6/WAIT# P1.7/A17/WCLK

11.3 PCA COMPARE/CAPTURE MODULES

Each compare/capture module is made up of a compare/capture register pair (CCAP*x*H/CCAPxL), a 16-bit comparator, and various logic gates and signal transition selectors. The registers store the time or count at which an external event occurred (capture) or at which an action should occur (comparison). In the PWM mode, the low-byte register controls the duty cycle of the output waveform.

The logical configuration of a compare/capture module depends on its mode of operation (Figures 11-2 through 11-5). Each module can be independently programmed for operation in any of the following modes:

- 16-bit capture mode with triggering on the positive edge, negative edge, or either edge.
- Compare modes: 16-bit software timer, 16-bit high-speed output, 16-bit WDT (module 4 only), or 8-bit pulse width modulation.
- No operation.

Bit combinations programmed into a compare/capture module's mode register (CCAPM*x*) determine the operating mode. Figure 11-9 on page 11-15 provides bit definitions and Table 11-3 lists the bit combinations of the available modes. Other bit combinations are invalid and produce undefined results.

The compare/capture modules perform their programmed functions when their common time base, the PCA timer/counter, runs. The timer/counter is turned on and off with the CR bit in the CCON register. To disable any given module, program it for the no operation mode. The occurrence of a capture, software timer, or high-speed output event in a compare/capture module sets the module's compare/capture flag (CCF*x*) in the CCON register and generates a PCA interrupt request if the corresponding enable bit in the CCAPM*x* register is set.

The CPU can read or write the CCAP*x*H and CCAP*x*L registers at any time.

11.3.1 16-bit Capture Mode

The capture mode (Figure 11-2) provides the PCA with the ability to measure periods, pulse widths, duty cycles, and phase differences at up to five separate inputs. External I/O pins CEX0 through CEX4 are sampled for signal transitions (positive and/or negative as specified). When a compare/capture module programmed for the capture mode detects the specified transition, it captures the PCA timer/counter value. This records the time at which an external event is detected, with a resolution equal to the timer/counter clock period.

To program a compare/capture module for the 16-bit capture mode, program the CAPP*x* and CAPN*x* bits in the module's CCAPM*x* register as follows:

- To trigger the capture on a positive transition, set CAPP*x* and clear CAPN*x*.
- To trigger the capture on a negative transition, set CAPN*x* and clear CAPP*x*.
- To trigger the capture on a positive or negative transition, set both CAPPx and CAPNx.

Table 11-3 on page 11-14 lists the bit combinations for selecting module modes. For modules in the capture mode, detection of a valid signal transition at the I/O pin (CEX*x*) causes hardware to load the current PCA timer/counter value into the compare/capture registers (CCAP*x*H/CCAP*x*L) and to set the module's compare/capture flag (CCF*x*) in the CCON register. If the corresponding interrupt enable bit (ECCF*x*) in the CCAPM*x* register is set (Figure 11-9 on page 11-15), the PCA sends an interrupt request to the interrupt handler.

Since hardware does not clear the event flag when the interrupt is processed, the user must clear the flag in software. A subsequent capture by the same module overwrites the existing captured value. To preserve a captured value, save it in RAM with the interrupt service routine before the next capture event occurs.

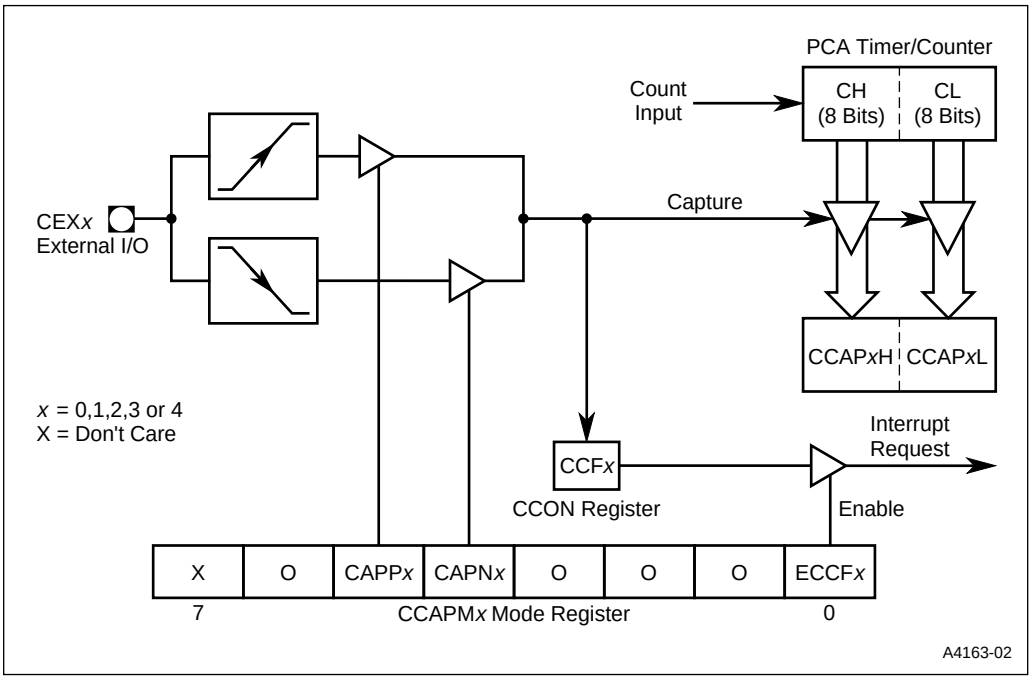

Figure 11-2. PCA 16-bit Capture Mode

11.3.2 Compare Modes

The compare function provides the capability for operating the five modules as timers, event counters, or pulse width modulators. Four modes employ the compare function: 16-bit software timer mode, high-speed output mode, WDT mode, and PWM mode. In the first three of these, the compare/capture module continuously compares the 16-bit PCA timer/counter value with the 16-bit value pre-loaded into the module's CCAPxH/CCAPxL register pair. In the PWM mode, the module continuously compares the value in the low-byte PCA timer/counter register (CL) with an 8-bit value in the CCAPxL module register. Comparisons are made three times per peripheral

cycle to match the fastest PCA timer/counter clocking rate ($F_{OSC}/4$). For a description of peripheral cycle timing, see “Clock and Reset Unit” on page 2-7.

Setting the ECOM*x* bit in a module’s mode register (CCAPMx) selects the compare function for that module (Figure 11-9 on page 11-15). To use the modules in the compare modes, observe the following general procedure:

1. Select the module’s mode of operation.
2. Select the input signal for the PCA timer/counter.
3. Load the comparison value into the module’s compare/capture register pair.
4. Set the PCA timer/counter run control bit.
5. After a match causes an interrupt, clear the module’s compare/capture flag.

11.3.3 16-bit Software Timer Mode

To program a compare/capture module for the 16-bit software timer mode (Figure 11-3), set the ECOM*x* and MAT*x* bits in the module’s CCAPM*x* register. Table 11-3 lists the bit combinations for selecting module modes.

A match between the PCA timer/counter and the compare/capture registers (CCAP*x*H/CCAP*x*L) sets the module’s compare/capture flag (CCF*x* in the CCON register). This generates an interrupt request if the corresponding interrupt enable bit (ECCF*x* in the CCAPM*x* register) is set. Since hardware does not clear the compare/capture flag when the interrupt is processed, the user must clear the flag in software. During the interrupt routine, a new 16-bit compare value can be written to the compare/capture registers (CCAP*x*H/CCAP*x*L).

NOTE

To prevent an invalid match while updating these registers, user software should write to CCAPxL first, then CCAPxH. A write to CCAP*x*L clears the ECOM*x* bit disabling the compare function, while a write to CCAP*x*H sets the ECOM*x* bit re-enabling the compare function.

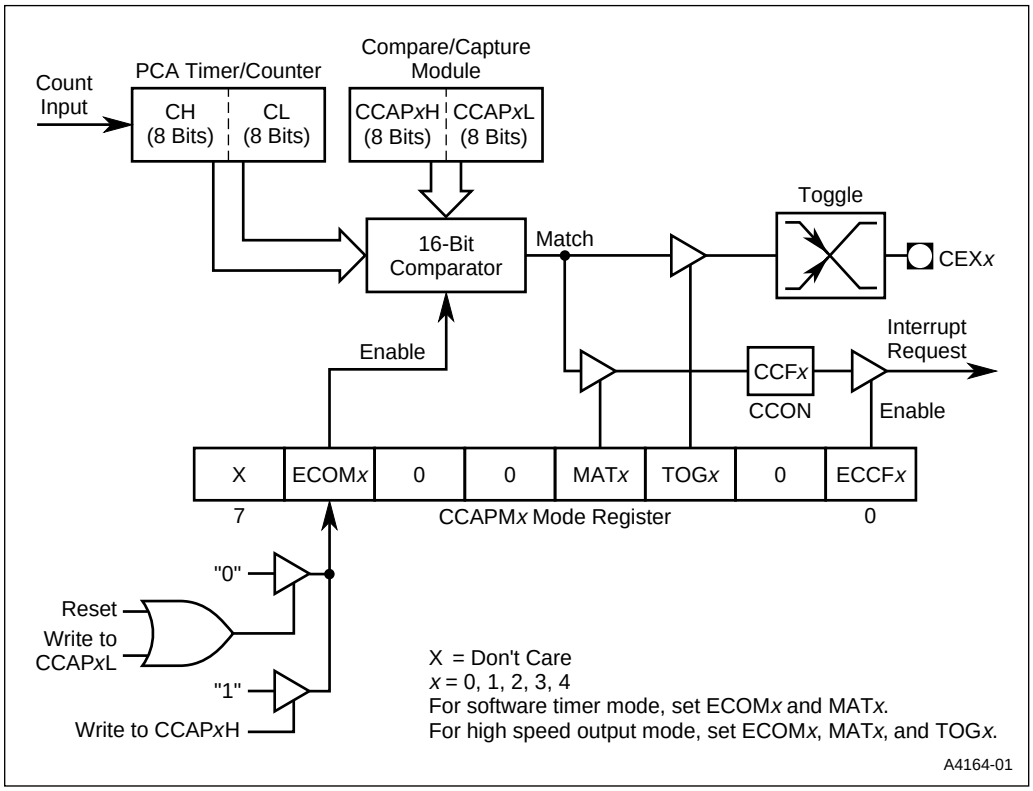

Figure 11-3. PCA Software Timer and High-speed Output Modes

11.3.4 High-speed Output Mode

The high-speed output mode (Figure 11-3) generates an output signal by toggling the module's I/O pin (CEX*x*) when a match occurs. This provides greater accuracy than toggling pins in software because the toggle occurs *before* the interrupt request is serviced. Thus, interrupt response time does not affect the accuracy of the output.

To program a compare/capture module for the high-speed output mode, set the ECOM*x*, MAT*x*, TOG*x* bits in the module's CCAPM*x* register. Table 11-3 on page 11-14 lists the bit combinations for selecting module modes. A match between the PCA timer/counter and the compare/capture registers (CCAP*x*H/CCAP*x*L) toggles the CEX*x* pin and sets the module's compare/capture flag (CCF*x* in the CCON register). By setting or clearing the CEX*x* pin in software, the user selects whether the match toggles the pin from low to high or vice versa.

The user also has the option of generating an interrupt request when the match occurs by setting the corresponding interrupt enable bit (ECCF*x* in the CCAPM*x* register). Since hardware does not clear the compare/capture flag when the interrupt is processed, the user must clear the flag in software.

If the user does not change the compare/capture registers in the interrupt routine, the next toggle occurs after the PCA timer/counter rolls over and the count again matches the comparison value. During the interrupt routine, a new 16-bit compare value can be written to the compare/capture registers (CCAP*x*H/CCAP*x*L).

NOTE

To prevent an invalid match while updating these registers, user software should write to CCAPxL first, then CCAPxH. A write to CCAP*x*L clears the ECOM*x* bit disabling the compare function, while a write to CCAP*x*H sets the ECOM*x* bit re-enabling the compare function.

11.3.5 PCA Watchdog Timer Mode

A watchdog timer (WDT) provides the means to recover from routines that do not complete successfully. A WDT automatically invokes a device reset if it does not regularly receive hold-off signals. WDTs are used in applications that are subject to electrical noise, power glitches, electrostatic discharges, etc., or where high reliability is required.

In addition to the 8X930A*x*'s 14-bit hardware WDT, the PCA provides a programmable-frequency 16-bit WDT as a mode option on compare/capture module 4. This mode generates a device reset when the count in the PCA timer/counter matches the value stored in the module 4 compare/capture registers. A PCA WDT reset has the same effect as an external reset. Module 4 is the only PCA module that has the WDT mode. When not programmed as a WDT, it can be used in the other modes.

To program module 4 for the PCA WDT mode (Figure 11-4), set the ECOM4 and MAT4 bits in the CCAPM4 register and the WDTE bit in the CMOD register. Table 11-3 lists the bit combinations for selecting module modes. Also select the desired input for the PCA timer/counter by programming the CPS0 and CPS1 bits in the CMOD register (see Figure 11-7 on page 11-13). Enter a 16-bit comparison value in the compare/capture registers (CCAP4H/CCAP4L). Enter a 16-bit initial value in the PCA timer/counter (CH/CL) or use the reset value (0000H). The difference between these values multiplied by the PCA input pulse rate determines the running time to "expiration." Set the timer/counter run control bit (CR in the CCON register) to start the PCA WDT.

The PCA WDT generates a reset signal each time a match occurs. To hold off a PCA WDT reset, the user has three options:

- periodically change the comparison value in CCAP4H/CCAP4L so a match never occurs
- periodically change the PCA timer/counter value so a match never occurs
- disable the module 4 reset output signal by clearing the WDTE bit before a match occurs, then later re-enable it

The first two options are more reliable because the WDT is not disabled as in the third option. The second option is not recommended if other PCA modules are in use, since the five modules share a common time base. Thus, in most applications the first option is the best one.

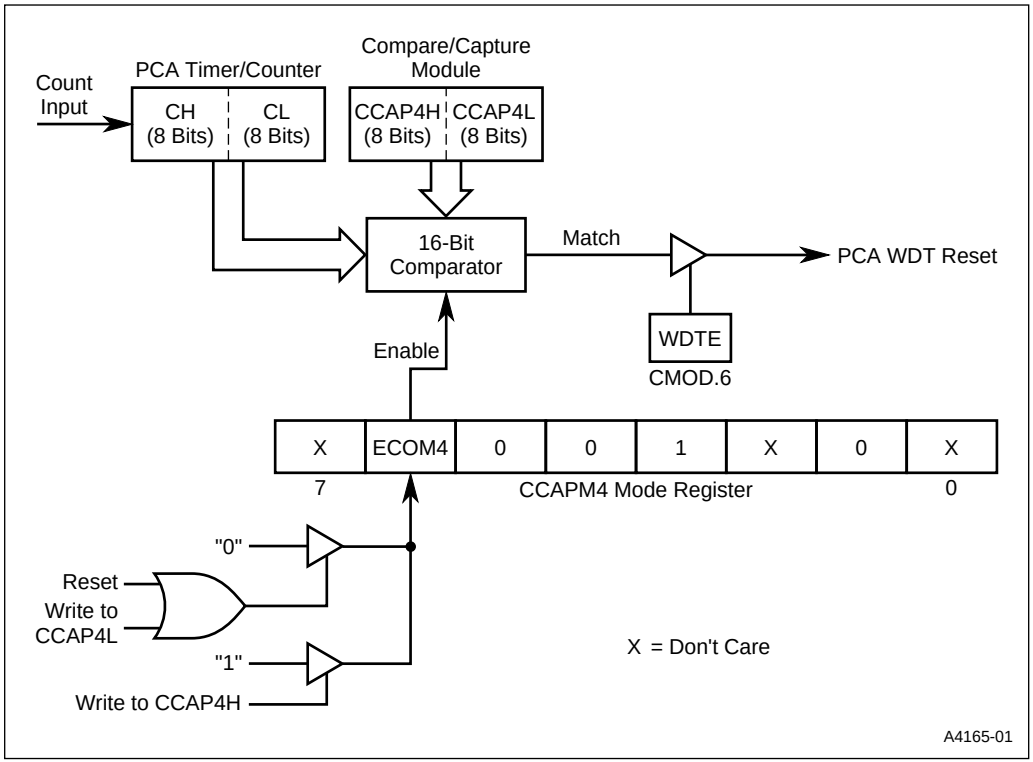

Figure 11-4. PCA Watchdog Timer Mode

11.3.6 Pulse Width Modulation Mode

The five PCA comparator/capture modules can be independently programmed to function as pulse width modulators (Figure 11-5). The modulated output, which has a pulse width resolution of eight bits, is available at the CEX*x* pin. The PWM output can be used to convert digital data to an analog signal with simple external circuitry.

In this mode the value in the low byte of the PCA timer/counter (CL) is continuously compared with the value in the low byte of the compare/capture register (CCAP*x*L). When CL < CCAP*x*L, the output waveform (Figure 11-6) is low. When a match occurs (CL = CCAP*x*L), the output waveform goes high and remains high until CL rolls over from FFH to 00H, ending the period. At rollover the output returns to a low, the value in CCAP*x*H is loaded into CCAP*x*L, and a new period begins.

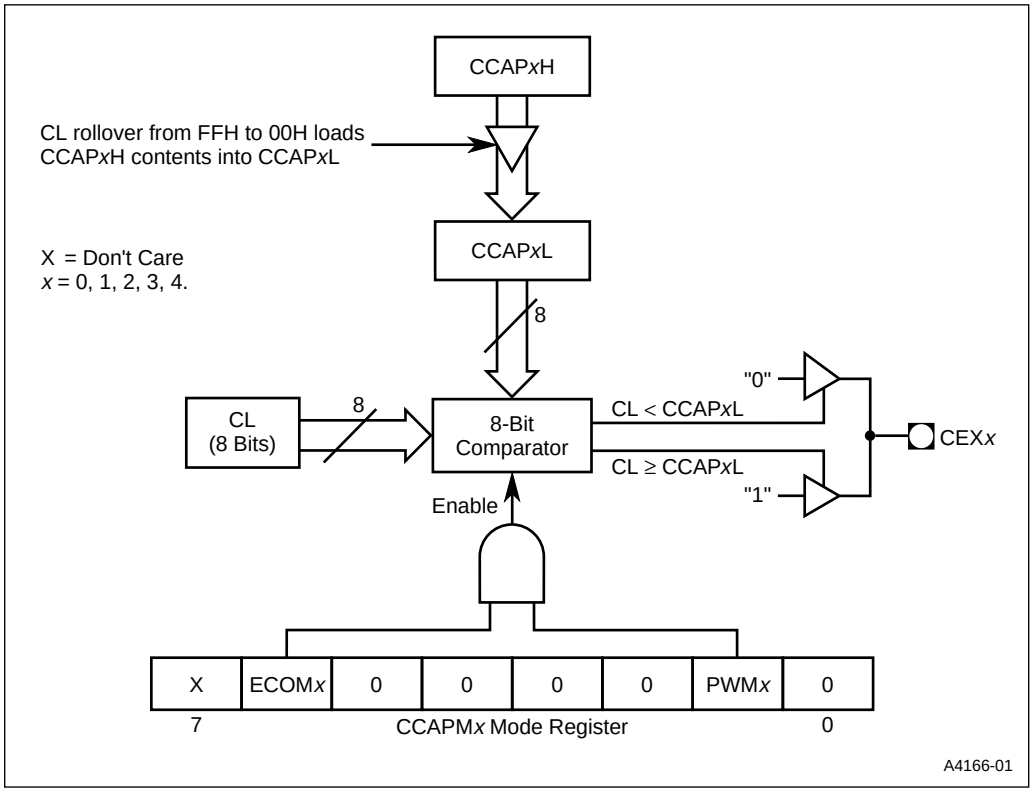

Figure 11-5. PCA 8-bit PWM Mode

The value in CCAP*x*L determines the duty cycle of the current period. The value in CCAP*x*H determines the duty cycle of the following period. Changing the value in CCAP*x*L over time modulates the pulse width. As depicted in Figure 11-6, the 8-bit value in CCAP*x*L can vary from 0 (100% duty cycle) to 255 (0.4% duty cycle).

NOTE

To change the value in CCAP*x*L without glitches, write the new value to the high byte register (CCAP*x*H). This value is shifted by hardware into CCAP*x*L when CL rolls over from FFH to 00H.

The frequency of the PWM output equals the frequency of the PCA timer/counter input signal divided by 256. The highest frequency occurs when the $F_{OSC}/4$ input is selected for the PCA timer/counter. For PLLSEL2:0 = 100 and F_{OSC} = 12 MHz, this is 11.7 KHz. For PLLSEL2:0 = 110 and F_{OSC} = 12 MHz, this is 23.4 KHz.

To program a compare/capture module for the PWM mode, set the ECOM*x* and PWM*x* bits in the module's CCAPM*x* register. Table 11-3 on page 11-14 lists the bit combinations for selecting module modes. Also select the desired input for the PCA timer/counter by programming the CPS0 and CPS1 bits in the CMOD register (see Figure 11-7). Enter an 8-bit value in CCAPxL to specify the duty cycle of the first period of the PWM output waveform. Enter an 8-bit value in CCAP*x*H to specify the duty cycle of the second period. Set the timer/counter run control bit (CR in the CCON register) to start the PCA timer/counter.

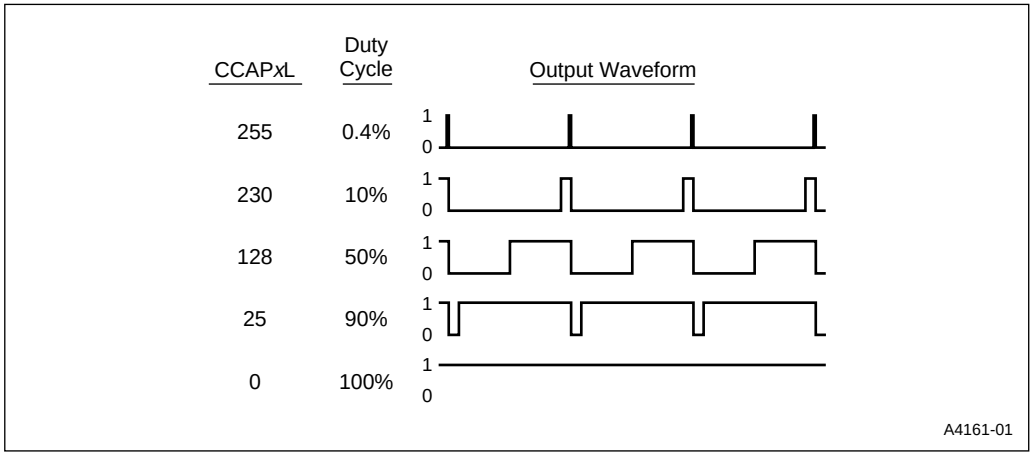

Figure 11-6. PWM Variable Duty Cycle

CMOD

Address: S:D9H
Reset State: 00XX X000B

7							0
CIDL	WDTE	—	—	—	CPS1	CPS0	ECF

Bit Number	Bit Mnemonic	Function
7	CIDL	PCA Timer/Counter Idle Control: CIDL = 1 disables the PCA timer/counter during idle mode. CIDL = 0 allows the PCA timer/counter to run during idle mode.
6	WDTE	Watchdog Timer Enable: WDTE = 1 enables the watchdog timer output on PCA module 4. WDTE = 0 disables the PCA watchdog timer output.
5:3	—	Reserved: Values read from these bits are indeterminate. Write zeros to these bits.
2:1	CPS1:0	PCA Timer/Counter Input Select: **CPS1 CPS0** 0 0 F_{OSC} /12 0 1 F_{OSC} /4 1 0 Timer 0 overflow 1 1 External clock at ECI pin (maximum rate = F_{OSC} /8)
0	ECF	PCA Timer/Counter Interrupt Enable: ECF = 1 enables the CF bit in the CCON register to generate an interrupt request.

Figure 11-7. CMOD: PCA Timer/Counter Mode Register

CCON

Address: S:D8H
Reset State: 00X0 0000B

7							0
CF	CR	—	CCF4	CCF3	CCF2	CCF1	CCF0

Bit Number	Bit Mnemonic	Function
7	CF	PCA Timer/Counter Overflow Flag: Set by hardware when the PCA timer/counter rolls over. This generates an interrupt request if the ECF interrupt enable bit in CMOD is set. CF can be set by hardware or software but can be cleared only by software.
6	CR	PCA Timer/Counter Run Control Bit: Set and cleared by software to turn the PCA timer/counter on and off.
5	—	Reserved: The value read from this bit is indeterminate. Write a zero to this bit.
4:0	CCF4:0	PCA Module Compare/Capture Flags: Set by hardware when a match or capture occurs. This generates a PCA interrupt request if the ECCF*x* interrupt enable bit in the corresponding CCAPM*x* register is set. Must be cleared by software.

Figure 11-8. CCON: PCA Timer/Counter Control Register

Table 11-3. PCA Module Modes

ECOM*x*	CAPP*x*	CAPN*x*	MAT*x*	TOG*x*	PWM*x*	ECCF*x*	Module Mode
0	0	0	0	0	0	0	No operation
X	1	0	0	0	0	X	16-bit capture on positive-edge trigger at CEX*x*
X	0	1	0	0	0	X	16-bit capture on negative-edge trigger at CEX*x*
X	1	1	0	0	0	X	16-bit capture on positive- or negative-edge trigger at CEX*x*
1	0	0	1	0	0	X	Compare: software timer
1	0	0	1	1	0	X	Compare: high-speed output
1	0	0	0	0	1	0	Compare: 8-bit PWM
1	0	0	1	X	0	X	Compare: PCA WDT (CCAPM4 only) (Note 3)

NOTES:
1. This table shows the CCAPM*x* register bit combinations for selecting the operating modes of the PCA compare/capture modules. Other bit combinations are invalid. See Figure 11-9 for bit definitions.
2. *x* = 0–4, X = Don't care.
3. For PCA WDT mode, also set the WDTE bit in the CMOD register to enable the reset output signal.

CCAPM*x* (*x* = 0–4)

Address: CCAPM0 S:DAH
CCAPM1 S:DBH
CCAPM2 S:DCH
CCAPM3 S:DDH
CCAPM4 S:DEH

Reset State: X000 0000B

7							0
—	ECOM*x*	CAPP*x*	CAPN*x*	MAT*x*	TOG*x*	PWM*x*	ECCF*x*

Bit Number	Bit Mnemonic	Function
7	—	Reserved: The value read from this bit is indeterminate. Write a zero to this bit.
6	ECOM*x*	Compare Modes: ECOM*x* = 1 enables the module comparator function. The comparator is used to implement the software timer, high-speed output, pulse width modulation, and watchdog timer modes.
5	CAPP*x*	Capture Mode (Positive): CAPP*x* = 1 enables the capture function with capture triggered by a positive edge on pin CEX*x*.
4	CAPN*x*	Capture Mode (Negative): CAPN*x* = 1 enables the capture function with capture triggered by a negative edge on pin CEX*x*.
3	MAT*x*	Match: Set ECOM*x* and MAT*x* to implement the software timer mode. When MAT*x* = 1, a match of the PCA timer/counter with the compare/capture register sets the CCF*x* bit in the CCON register, flagging an interrupt.
2	TOG*x*	Toggle: Set ECOM*x*, MAT*x*, and TOG*x* to implement the high-speed output mode. When TOG*x* = 1, a match of the PCA timer/counter with the compare/capture register toggles the CEX*x* pin.
1	PWM*x*	Pulse Width Modulation Mode: PWM*x* = 1 configures the module for operation as an 8-bit pulse width modulator with output waveform on the CEX*x* pin.
0	ECCF*x*	Enable CCF*x* Interrupt: Enables compare/capture flag CCF*x* in the CCON register to generate an interrupt request.

Figure 11-9. CCAPM*x*: PCA Compare/Capture Module Mode Registers

12

Serial I/O Port

CHAPTER 12
SERIAL I/O PORT

The serial input/output port supports communication with modems and other external peripheral devices. This chapter provides instructions for programming the serial port and generating the serial I/O baud rates with timer 1 and timer 2.

12.1 OVERVIEW

The serial I/O port provides both synchronous and asynchronous communication modes. It operates as a universal asynchronous receiver and transmitter (UART) in three full-duplex modes (modes 1, 2, and 3). Asynchronous transmission and reception can occur simultaneously and at different baud rates. The UART supports framing-bit error detection, multiprocessor communication, and automatic address recognition. The serial port also operates in a single synchronous mode (mode 0).

The synchronous mode (mode 0) operates at a single baud rate. Mode 2 operates at two baud rates. Modes 1 and 3 operate over a wide range of baud rates, which are generated by timer 1 and timer 2. Baud rates are detailed in “Baud Rates” on page 12-10.

NOTE

The baud rate calculations in this chapter are for PLL off. For the case of PLL on (PLLSEL2:0 = 110), the internal clock distributed to the CPU and the peripherals is twice as fast, so all baud rates are two times greater than shown (PLLSEL2:0 = 100). See Table 2-2 on page 2-8.

The serial port signals are defined in Table 12-1, and the serial port special function registers are described in Table 12-2. Figure 12-1 is a block diagram of the serial port.

For the three asynchronous modes, the UART transmits on the TXD pin and receives on the RXD pin. For the synchronous mode (mode 0), the UART outputs a clock signal on the TXD pin and sends and receives messages on the RXD pin (Figure 12-1). The SBUF register, which holds received bytes and bytes to be transmitted, actually consists of two physically different registers. To send, software writes a byte to SBUF; to receive, software reads SBUF. The receive shift register allows reception of a second byte before the first byte has been read from SBUF. However, if software has not read the first byte by the time the second byte is received, the second byte will overwrite the first. The UART sets interrupt bits TI and RI on transmission and reception, respectively. These two bits share a single interrupt request and interrupt vector.

The serial port control (SCON) register (Figure 12-2) configures and controls the serial port.

Table 12-1. Serial Port Signals

Function Name	Type	Description	Multiplexed With
TXD	O	**Transmit Data.** In mode 0, TXD transmits the clock signal. In modes 1, 2, and 3, TXD transmits serial data.	P3.1
RXD	I/O	**Receive Data.** In mode 0, RXD transmits and receives serial data. In modes 1, 2, and 3, RXD receives serial data.	P3.0

Table 12-2. Serial Port Special Function Registers

Mnemonic	Description	Address
SBUF	**Serial Buffer.** Two separate registers, accessed with same address comprise the SBUF register. Writing to SBUF loads the transmit buffer; reading SBUF accesses the receive buffer.	S:99H
SCON	**Serial Port Control**. Selects the serial port operating mode. SCON enables and disables the receiver, framing bit error detection, multiprocessor communication, automatic address recognition, and the serial port interrupt bits.	S:98H
SADDR	**Serial Address.** Defines the individual address for a slave device.	S:A8H
SADEN	**Serial Address Enable.** Specifies the mask byte that is used to define the given address for a slave device.	S:B8H

12.2 MODES OF OPERATION

The serial I/O port can operate in one synchronous and three asynchronous modes.

12.2.1 Synchronous Mode (Mode 0)

Mode 0 is a half-duplex, synchronous mode, which is commonly used to expand the I/O capabilities of a device with shift registers. The transmit data (TXD) pin outputs a set of eight clock pulses while the receive data (RXD) pin transmits or receives a byte of data. The eight data bits are transmitted and received least-significant bit (LSB) first. Shifts occur in the last phase (S6P2) of every peripheral cycle, which corresponds to a baud rate of $F_{OSC}/12$. Figure 12-3 on page 12-6 shows the timing for transmission and reception in mode 0.

12.2.1.1 Transmission (Mode 0)

Follow these steps to begin a transmission:

1. Write to the SCON register, clearing bits SM0, SM1, and REN.
2. Write the byte to be transmitted to the SBUF register. This write starts the transmission.

Hardware executes the write to SBUF in the last phase (S6P2) of a peripheral cycle. At S6P2 of the following cycle, hardware shifts the LSB (D0) onto the RXD pin. At S3P1 of the next cycle, the TXD pin goes low for the first clock-signal pulse. Shifts continue every peripheral cycle. In the ninth cycle after the write to SBUF, the MSB (D7) is on the RXD pin. At the beginning of the

tenth cycle, hardware drives the RXD pin high and asserts TI (S1P1) to indicate the end of the transmission.

12.2.1.2 Reception (Mode 0)

To start a reception in mode 0, write to the SCON register. Clear bits SM0, SM1, and RI and set the REN bit.

Hardware executes the write to SCON in the last phase (S6P2) of a peripheral cycle (Figure 12-3). In the second peripheral cycle following the write to SCON, TXD goes low at S3P1 for the first clock-signal pulse, and the LSB (D0) is sampled on the RXD pin at S5P2. The D0 bit is then shifted into the shift register. After eight shifts at S6P2 of every peripheral cycle, the LSB (D7) is shifted into the shift register, and hardware asserts RI (S1P1) to indicate a completed reception. Software can then read the received byte from SBUF.

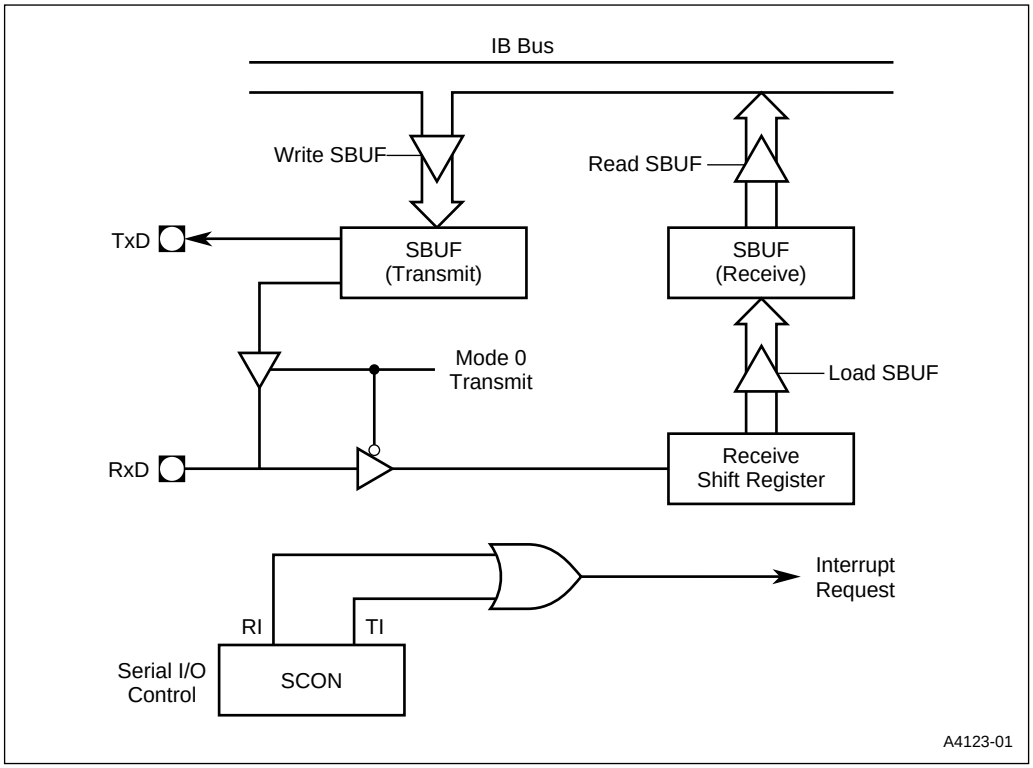

Figure 12-1. Serial Port Block Diagram

SCON

Address: S:98H
Reset State: 0000 0000B

7							0
FE/SM0	SM1	SM2	REN	TB8	RB8	TI	RI

Bit Number	Bit Mnemonic	Function
7	FE	Framing Error Bit: To select this function, set the SMOD0 bit in the PCON register. Set by hardware to indicate an invalid stop bit. Cleared by software, not by valid frames.
	SM0	Serial Port Mode Bit 0: To select this function, clear the SMOD0 bit in the PCON register. Software writes to bits SM0 and SM1 to select the serial port operating mode. Refer to the SM1 bit for the mode selections.
6	SM1	Serial Port Mode Bit 1: Software writes to bits SM1 and SM0 (above) to select the serial port operating mode. **SM0 SM1 Mode Description Baud Rate†** 0 0 0 Shift register $F_{OSC}/12$ 0 1 1 8-bit UART Variable 1 0 2 9-bit UART $F_{OSC}/32$†† or $F_{OSC}/64$†† 1 1 3 9-bit UART Variable †For the case of PLL on, see note on page page 12-1. ††Select by programming the SMOD bit in the PCON register (see section "Baud Rates" on page 12-10).
5	SM2	Serial Port Mode Bit 2: Software writes to bit SM2 to enable and disable the multiprocessor communication and automatic address recognition features. This allows the serial port to differentiate between data and command frames and to recognize slave and broadcast addresses.
4	REN	Receiver Enable Bit: To enable reception, set this bit. To enable transmission, clear this bit.
3	TB8	Transmit Bit 8: In modes 2 and 3, software writes the ninth data bit to be transmitted to TB8. Not used in modes 0 and 1.
2	RB8	Receiver Bit 8: Mode 0: Not used. Mode 1 (SM2 clear): Set or cleared by hardware to reflect the stop bit received. Modes 2 and 3 (SM2 set): Set or cleared by hardware to reflect the ninth data bit received.

SCON (Continued)

Address: S:98H
Reset State: 0000 0000B

7							0
FE/SM0	SM1	SM2	REN	TB8	RB8	TI	RI

Bit Number	Bit Mnemonic	Function
1	TI	Transmit Interrupt Flag Bit: Set by the transmitter after the last data bit is transmitted. Cleared by software.
0	RI	Receive Interrupt Flag Bit: Set by the receiver after the last data bit of a frame has been received. Cleared by software.

Figure 12-2. SCON: Serial Port Control Register

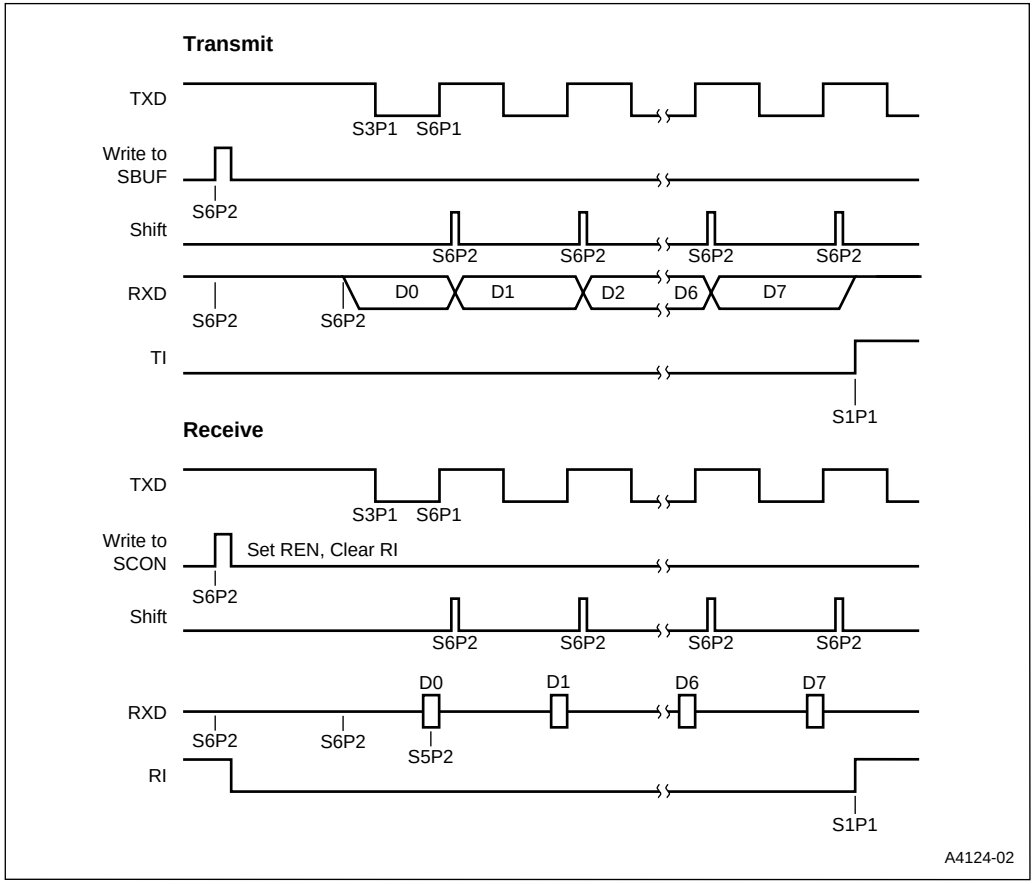

Figure 12-3. Mode 0 Timing

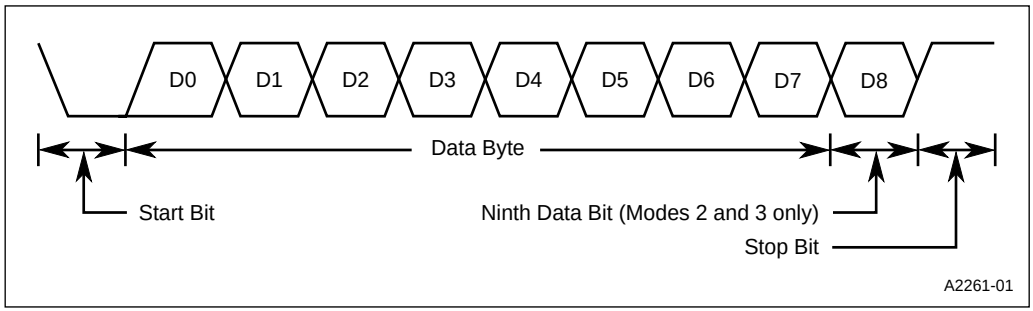

Figure 12-4. Data Frame (Modes 1, 2, and 3)

12.2.2 Asynchronous Modes (Modes 1, 2, and 3)

The serial port has three asynchronous modes of operation:

- **Mode 1.** Mode 1 is a full-duplex, asynchronous mode. The data frame (Figure 12-4) consists of 10 bits: one start bit, eight data bits, and one stop bit. Serial data is transmitted on the TXD pin and received on the RXD pin. When a message is received, the stop bit is read in the RB8 bit in the SCON register. The baud rate is generated by overflow of timer 1 or timer 2 (see "Baud Rates" on page 12-10).
- **Modes 2 and 3.** Modes 2 and 3 are full-duplex, asynchronous modes. The data frame (Figure 12-4) consists of 11 bits: one start bit, eight data bits (transmitted and received LSB first), one programmable ninth data bit, and one stop bit. Serial data is transmitted on the TXD pin and received on the RXD pin. On receive, the ninth bit is read from the RB8 bit in the SCON register. On transmit, the ninth data bit is written to the TB8 bit in the SCON register. Alternatively, you can use the ninth bit as a command/data flag.
  - In mode 2, the baud rate is programmable to 1/32 or 1/64 of the oscillator frequency.
  - In mode 3, the baud rate is generated by overflow of timer 1 or timer 2.

12.2.2.1 Transmission (Modes 1, 2, 3)

Follow these steps to initiate a transmission:

1. Write to the SCON register. Select the mode with the SM0 and SM1 bits, and clear the REN bit. For modes 2 and 3, also write the ninth bit to the TB8 bit.
2. Write the byte to be transmitted to the SBUF register. This write starts the transmission.

12.2.2.2 Reception (Modes 1, 2, 3)

To prepare for a reception, set the REN bit in the SCON register. The actual reception is then initiated by a detected high-to-low transition on the RXD pin.

12.3 FRAMING BIT ERROR DETECTION (MODES 1, 2, AND 3)

Framing bit error detection is provided for the three asynchronous modes. To enable the framing bit error detection feature, set the SMOD0 bit in the PCON register (see Figure 14-1 on page 14-2). When this feature is enabled, the receiver checks each incoming data frame for a valid stop bit. An invalid stop bit may result from noise on the serial lines or from simultaneous transmission by two CPUs. If a valid stop bit is not found, the software sets the FE bit in the SCON register (see Figure 12-2).

Software may examine the FE bit after each reception to check for data errors. Once set, only software or a reset can clear the FE bit. Subsequently received frames with valid stop bits cannot clear the FE bit.

12.4 MULTIPROCESSOR COMMUNICATION (MODES 2 AND 3)

Modes 2 and 3 provide a ninth-bit mode to facilitate multiprocessor communication. To enable this feature, set the SM2 bit in the SCON register (see Figure 12-2). When the multiprocessor communication feature is enabled, the serial port can differentiate between data frames (ninth bit clear) and address frames (ninth bit set). This allows the microcontroller to function as a slave processor in an environment where multiple slave processors share a single serial line.

When the multiprocessor communication feature is enabled, the receiver ignores frames with the ninth bit clear. The receiver examines frames with the ninth bit set for an address match. If the received address matches the slave's address, the receiver hardware sets the RB8 bit and the RI bit in the SCON register, generating an interrupt.

NOTE

The ES bit must be set in the IEN0 register to allow the RI bit to generate an interrupt. The IEN0 register is described in Chapter 8, Interrupts.

The addressed slave's software then clears the SM2 bit in the SCON register and prepares to receive the data bytes. The other slaves are unaffected by these data bytes because they are waiting to respond to their own addresses.

12.5 AUTOMATIC ADDRESS RECOGNITION

The automatic address recognition feature is enabled when the multiprocessor communication feature is enabled (i.e., the SM2 bit is set in the SCON register).

Implemented in hardware, automatic address recognition enhances the multiprocessor communication feature by allowing the serial port to examine the address of each incoming command frame. Only when the serial port recognizes its own address does the receiver set the RI bit in the SCON register to generate an interrupt. This ensures that the CPU is not interrupted by command frames addressed to other devices.

If desired, you may enable the automatic address recognition feature in mode 1. In this configuration, the stop bit takes the place of the ninth data bit. The RI bit is set only when the received command frame address matches the device's address and is terminated by a valid stop bit.

NOTE

The multiprocessor communication and automatic address recognition features cannot be enabled in mode 0 (i.e., setting the SM2 bit in the SCON register in mode 0 has no effect).

To support automatic address recognition, a device is identified by a *given* address and a *broadcast* address.

12.5.1 Given Address

Each device has an *individual* address that is specified in the SADDR register; the SADEN register is a mask byte that contains don't-care bits (defined by zeros) to form the device's *given* ad-

dress. These don't-care bits provide the flexibility to address one or more slaves at a time. To address a device by its individual address, the SADEN mask byte must be 1111 1111 The following example illustrates how a given address is formed:

SADDR	=	0101 0110
SADEN	=	1111 1100
Given	=	0101 01XX

The following is an example of how to use given addresses to address different slaves:

Slave A:	SADDR	=	1111 0001
	SADEN	=	1111 1010
	Given	=	1111 0X0X

Slave C:	SADDR	=	1111 0010
	SADEN	=	1111 1101
	Given	=	1111 00X1

Slave B:	SADDR	=	1111 0011
	SADEN	=	1111 1001
	Given	=	1111 0XX1

The SADEN byte is selected so that each slave may be addressed separately. For Slave A, bit 0 (the LSB) is a don't-care bit; for Slaves B and C, bit 0 is a 1. To communicate with Slave A only, the master must send an address where bit 0 is clear (e.g., 1111 0000).

For Slave A, bit 1 is a 0; for Slaves B and C, bit 1 is a don't-care bit. To communicate with Slaves B and C, but not Slave A, the master must send an address with bits 0 and 1 both set (e.g., 1111 0011).

For Slaves A and B, bit 2 is a don't-care bit; for Slave C, bit 2 is a 0. To communicate with Slaves A and B, but not Slave C, the master must send an address with bit 0 set, bit 1 clear, and bit 2 set (e.g., 1111 0101).

To communicate with Slaves A, B, and C, the master must send an address with bit 0 set, bit 1 clear, and bit 2 clear (e.g., 1111 0001).

12.5.2 Broadcast Address

A *broadcast* address is formed from the logical OR of the SADDR and SADEN registers with zeros defined as don't-care bits, e.g.:

SADDR	=	0101 0110
SADEN	=	1111 1100
(SADDR) OR (SADEN)	=	1111 111X

The use of don't-care bits provides flexibility in defining the broadcast address, however, in most applications, a broadcast address is 0FFH.

The following is an example of using broadcast addresses:

Slave A:	SADDR	=	1111 0001	Slave C:	SADDR	=	1111 0010
	SADEN	=	1111 1010		SADEN	=	1111 1101
	Broadcast	=	1111 1X11		Broadcast	=	1111 1111
Slave B:	SADDR	=	1111 0011				
	SADEN	=	1111 1001				
	Broadcast	=	1111 1X11				

For Slaves A and B, bit 2 is a don't-care bit; for Slave C, bit 2 is set. To communicate with all of the slaves, the master must send an address FFH.

To communicate with Slaves A and B, but not Slave C, the master can send an address FBH.

12.5.3 Reset Addresses

On reset, the SADDR and SADEN registers are initialized to 00H, i.e., the given and broadcast addresses are XXXX XXXX (all don't-care bits). This ensures that the serial port is backwards-compatible with MCS® 51 microcontrollers that do not support automatic address recognition.

12.6 BAUD RATES †

You must select the baud rate for the serial port transmitter and receiver when operating in modes 1, 2, and 3. (The baud rate is preset for mode 0.) In its asynchronous modes, the serial port can transmit and receive simultaneously. Depending on the mode, the transmission and reception rates can be the same or different. Table 12-3 summarizes the baud rates that can be used for the four serial I/O modes.

12.6.1 Baud Rate for Mode 0 †

With the PLL on, the baud rate for mode 0 is fixed at $F_{OSC}/12$. For the case of PLL on (PLLSEL2:0 = 110), the baud rate for mode 0 is fixed at $F_{OSC}/6$.

† See note on page 12-1

Table 12-3. Summary of Baud Rates

Mode	No. of Baud Rates	Send and Receive at the Same Rate	Send and Receive at Different Rates
0	1	N/A	N/A
1	Many ††	Yes	Yes
2	2	Yes	No
3	Many ††	Yes	Yes

†† Baud rates are determined by overflow of timer 1 and/or timer 2.

12.6.2 Baud Rates for Mode 2 †

Mode 2 has two baud rates, which are selected by the SMOD1 bit in the PCON register (Figure 14-1 on page 14-2). The following expression defines the baud rate:

$$\text{Serial I/O Mode 2 Baud Rate} = 2^{SMOD1} \times \frac{F_{OSC}}{64}$$

12.6.3 Baud Rates for Modes 1 and 3 †

In modes 1 and 3, the baud rate is generated by overflow of timer 1 (default) and/or timer 2. You may select either or both timer(s) to generate the baud rate(s) for the transmitter and/or the receiver.

12.6.3.1 Timer 1 Generated Baud Rates (Modes 1 and 3) †

Timer 1 is the default baud rate generator for the transmitter and the receiver in modes 1 and 3. The baud rate is determined by the timer 1 overflow rate and the value of SMOD, as shown in the following formula:

$$\text{Serial I/O Modes 1 and 3 Baud Rate} = 2^{SMOD1} \times \frac{\text{Timer 1 Overflow Rate}}{32}$$

12.6.3.2 Selecting Timer 1 as the Baud Rate Generator †

To select timer 1 as the baud rate generator:

- Disable the timer interrupt by clearing the ET1 bit in the IEN0 register (Figure 6-4 on page 6-11).
- Configure timer 1 as a timer or an event counter (set or clear the C/T# bit in the TMOD register, Figure 10-5 on page 10-8).
- Select timer mode 0–3 by programming the M1 and M0 bits in the TMOD register.

† See note on page 12-1.

In most applications, timer 1 is configured as a timer in auto-reload mode (high nibble of TMOD = 0010B). The resulting baud rate is defined by the following expression:

$$\text{Serial I/O Modes 1 and 3 Baud Rate} = 2^{SMOD1} \times \frac{F_{OSC}}{32 \times 12 \times [256 - (TH1)]}$$

Timer 1 can generate very low baud rates with the following setup:

- Enable the timer 1 interrupt by setting the ET1 bit in the IEN0 register.
- Configure timer 1 to run as a 16-bit timer (high nibble of TMOD = 0001B).
- Use the timer 1 interrupt to initiate a 16-bit software reload.

Table 12-4 lists commonly used baud rates and shows how they are generated by timer 1.

Table 12-4. Timer 1 Generated Baud Rates for Serial I/O Modes 1 and 3

Baud Rate	Oscillator Frequency (F_{OSC})	SMOD1	Timer 1		
			C/T#	Mode	Reload Value
62.5 Kbaud (Max) †	12.0 MHz	1	0	2	FFH
110.0 Baud	6.0 MHz	0	0	2	72H
110.0 Baud †	12.0 MHz	0	0	1	FEEBH

12.6.3.3 Timer 2 Generated Baud Rates (Modes 1 and 3) †

Timer 2 may be selected as the baud rate generator for the transmitter and/or receiver (Figure 12-5). The timer 2 baud rate generator mode is similar to the auto-reload mode. A rollover in the TH2 register reloads registers TH2 and TL2 with the 16-bit value in registers RCAP2H and RCAP2L, which are preset by software.

The timer 2 baud rate is expressed by the following formula:

$$\text{Serial I/O Modes 1 and 3 Baud Rate} = \frac{\text{Timer 2 Overflow Rate}}{16}$$

12.6.3.4 Selecting Timer 2 as the Baud Rate Generator †

To select timer 2 as the baud rate generator for the transmitter and/or receiver, program the RCLCK and TCLCK bits in the T2CON register as shown in Table 12-5. (You may select different baud rates for the transmitter and receiver.) Setting RCLK and/or TCLK puts timer 2 into its baud rate generator mode (Figure 12-5). In this mode, a rollover in the TH2 register does not set the TF2 bit in the T2CON register. Also, a high-to-low transition at the T2EX pin sets the EXF2

† See note on page 12-1.

bit in the T2CON register but does not cause a reload from (RCAP2H, RCAP2L) to (TH2, TL2). You can use the T2EX pin as an additional external interrupt by setting the EXEN2 bit in T2CON.

NOTE

Turn the timer off (clear the TR2 bit in the T2CON register) before accessing registers TH2, TL2, RCAP2H, and RCAP2L.

You may configure timer 2 as a timer or a counter. In most applications, it is configured for timer operation (i.e., the C/T2# bit is clear in the T2CON register).

Table 12-5. Selecting the Baud Rate Generator(s)

RCLCK Bit	TCLCK Bit	Receiver Baud Rate Generator	Transmitter Baud Rate Generator
0	0	Timer 1	Timer 1
0	1	Timer 1	Timer 2
1	0	Timer 2	Timer 1
1	1	Timer 2	Timer 2

Note that timer 2 increments every state time ($2T_{OSC}$) when it is in the baud rate generator mode. In the baud rate formula that follows, “RCAP2H, RCAP2L” denotes the contents of RCAP2H and RCAP2L taken as a 16-bit unsigned integer:

$$\text{Serial I/O Modes 1 and 3 Baud Rate} = \frac{F_{OSC}}{32 \times [65536 - (RCAP2H, RCAP2L)]}$$

NOTE

When timer 2 is configured as a timer and is in baud rate generator mode, do not read or write the TH2 or TL2 registers. The timer is being incremented every state time, and the results of a read or write may not be accurate. In addition, you may read, but not write to, the RCAP2 registers; a write may overlap a reload and cause write and/or reload errors.

Table 12-6 lists commonly used baud rates and shows how they are generated by timer 2.

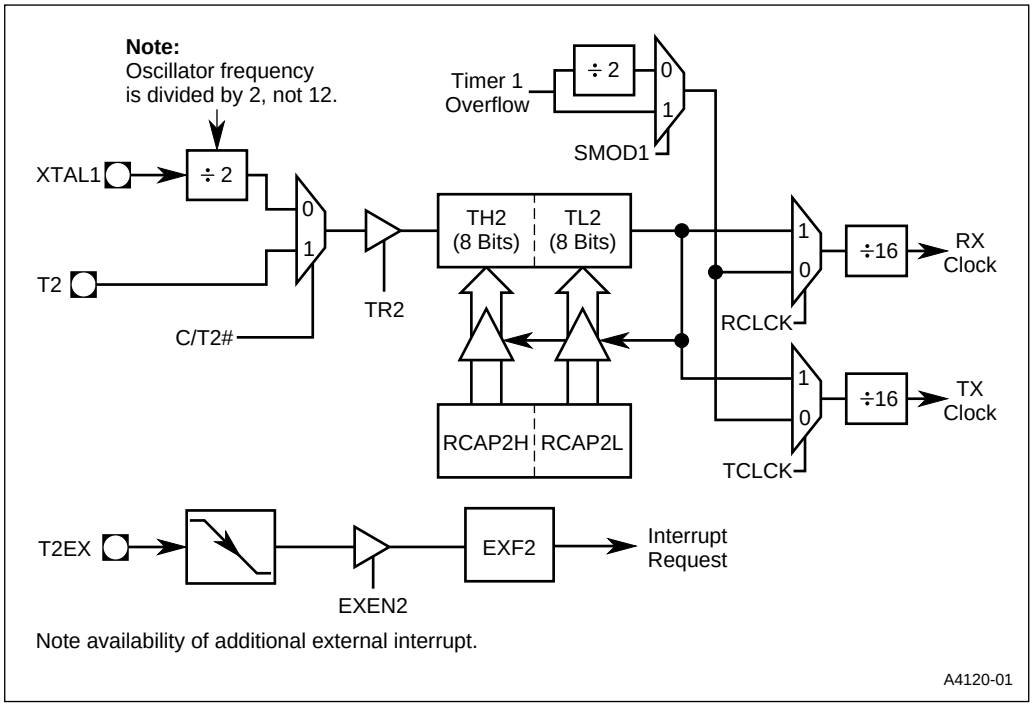

Figure 12-5. Timer 2 in Baud Rate Generator Mode †

Table 12-6. Timer 2 Generated Baud Rates

Baud Rate	Oscillator Frequency (F_{OSC})	RCAP2H	RCAP2L
375.0 Kbaud ††	12 MHz	FFH	FFH
9.6 Kbaud ††	12 MHz	FFH	D9H
4.8 Kbaud ††	12 MHz	FFH	B2H
2.4 Kbaud ††	12 MHz	FFH	64H
1.2 Kbaud ††	12 MHz	FEH	C8H
300.0 baud ††	12 MHz	FBH	1EH
110.0 baud ††	12 MHz	F2H	AFH
300.0 baud	6 MHz	FDH	8FH
110.0 baud	6 MHz	F9H	57H
†† See note on page page 12-1.			

† For the case of PLL on, the clock frequency at the 0 input of the C/T2# selector is F_{OSC}. See note on page 12-1.

13

Minimum Hardware Setup

CHAPTER 13
MINIMUM HARDWARE SETUP

This chapter discusses the basic operating requirements of the 8X930A*x* and describes a minimum hardware setup. Topics covered include power, ground, clock source, and device reset. For parameter values, refer to the device data sheet.

13.1 MINIMUM HARDWARE SETUP

Figure 13-1 shows a minimum hardware setup that employs the on-chip oscillator for the system clock and provides power-on reset. Control signals; Ports 0, 1, 2, and 3; and the USB port are not shown. See section “Clock Sources” on page 13-2 and section “Power-on Reset” on page 13-6. PLLSEL.2:0 select the USB operating rate. Refer to Table 2-2 on page 2-8.

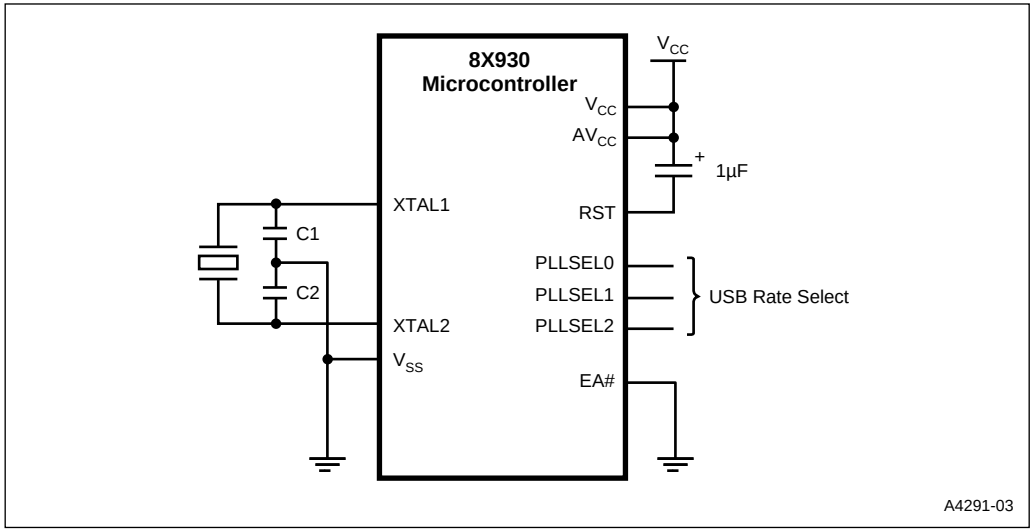

Figure 13-1. Minimum Setup

13.2 ELECTRICAL ENVIRONMENT

The 8X930A*x* is a high-speed CHMOS device. To achieve satisfactory performance, its operating environment should accommodate the device signal waveforms without introducing distortion or noise. Design considerations relating to device performance are discussed in this section. See the device data sheet for voltage and current requirements, operating frequency, and waveform timing.

13.2.1 Power and Ground Pins

Power the 8X930A*x* from a well-regulated power supply designed for high-speed digital loads. Use short, low impedance connections to the power (V_{CC}) and ground (V_{SS}) pins.

13.2.2 Unused Pins

To provide stable, predictable performance, connect unused input pins to V_{SS} or V_{CC}. Unterminated input pins can float to a mid-voltage level and draw excessive current. Unterminated interrupt inputs may generate spurious interrupts.

13.2.3 Noise Considerations

The fast rise and fall times of high-speed CHMOS logic may produce noise spikes on the power supply lines and signal outputs. To minimize noise and waveform distortion follow good board layout techniques. Use sufficient decoupling capacitors and transient absorbers to keep noise within acceptable limits. Connect 0.01 µF bypass capacitors between V_{CC} and each V_{SS} pin. Place the capacitors close to the device to minimize path lengths.

Multi-layer printed circuit boards with separate V_{CC} and ground planes help minimize noise. For additional information on noise reduction, see Application Note AP-125, "Designing Microcontroller Systems for Electrically Noisy Environments."

13.3 CLOCK SOURCES

The 8X930A*x* can use an external clock (Figure 13-3), an on-chip oscillator with crystal or ceramic resonator (Figure 13-2), or an on-chip phase-locked oscillator (locked to the external clock or the on-chip oscillator) as its clock source. For USB operating rates, see Table 2-2 on page 2-8.

13.3.1 On-chip Oscillator (Crystal)

This clock source uses an external quartz crystal connected from XTAL1 to XTAL2 as the frequency-determining element (Figure 13-2). The crystal operates in its fundamental mode as an inductive reactance in parallel resonance with capacitance external to the crystal. Oscillator design considerations include crystal specifications, operating temperature range, and parasitic board capacitance. Consult the crystal manufacturer's data sheet for parameter values. With high quality components, C1 = C2 = 30 pF is adequate for this application.

Pins XTAL1 and XTAL2 are protected by on-chip electrostatic discharge (ESD) devices, D1 and D2, which are diodes parasitic to the R_F FETs. They serve as clamps to V_{CC} and V_{SS}. Feedback resistor R_F in the inverter circuit, formed from paralleled n- and p- channel FETs, permits the PD bit in the PCON register (Figure 14-1 on page 14-2) to disable the clock during powerdown.

Noise spikes at XTAL1 and XTAL2 can disrupt microcontroller timing. To minimize coupling between other digital circuits and the oscillator, locate the crystal and the capacitors near the chip and connect to XTAL1, XTAL2, and V_{SS} with short, direct traces. To further reduce the effects of noise, place guard rings around the oscillator circuitry and ground the metal crystal case.

For a more in-depth discussion of crystal specifications, ceramic resonators, and the selection of C1 and C2 see Applications Note AP-155, “Oscillators for Microcontrollers,” in the Embedded Applications handbook.

13.3.2 On-chip Oscillator (Ceramic Resonator)

In cost-sensitive applications, you may choose a ceramic resonator instead of a crystal. Ceramic resonator applications may require slightly different capacitor values and circuit configuration. Consult the manufacturer’s data sheet for specific information.

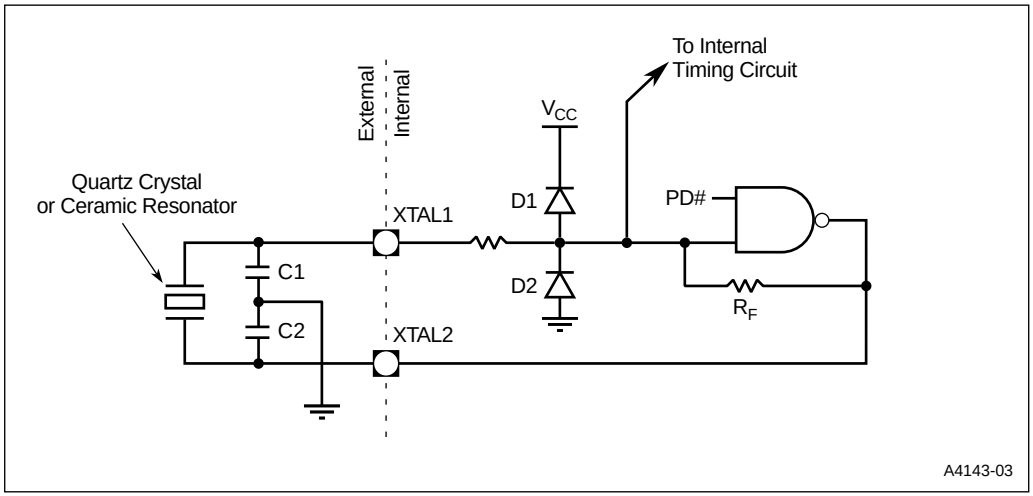

Figure 13-2. CHMOS On-chip Oscillator

13.3.3 External Clock

To operate the 8X930A*x* from an external clock, connect the clock source to the XTAL1 pin as shown in Figure 13-3. Leave the XTAL2 pin floating. The external clock driver can be a CMOS gate. If the clock driver is a TTL device, its output must be connected to V_{CC} through a 4.7 kΩ pullup resistor.

For external clock drive requirements, see the device data sheet. Figure 13-4 shows the clock drive waveform. The external clock source must meet the minimum high and low times (T_{CHCX} and T_{CLCX}) and the maximum rise and fall times (T_{CLCH} and T_{CHCL}) to minimize the effect of external noise on the clock generator circuit. Long rise and fall times increase the chance that external noise will affect the clock circuitry and cause unreliable operation.

The external clock driver may encounter increased capacitance loading at XTAL1 when power is applied, due to the interaction between the internal amplifier and its feedback capacitance (i.e., the Miller effect). Once the input waveform requirements are met, the input capacitance remains under 20 pF.

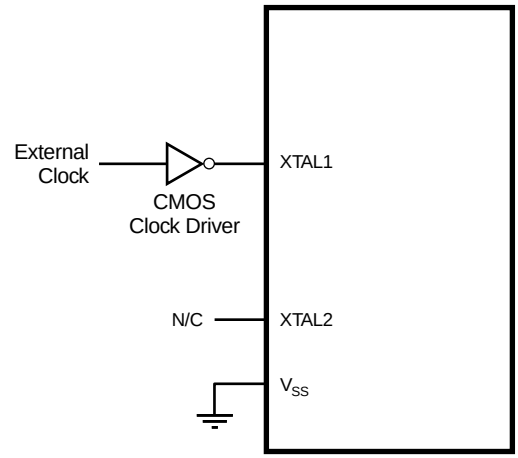

Note: If TTL clock driver is used, connect a 4.7kΩ pullup resistor from driver output to $V_{CC.}$

A4142-03

Figure 13-3. External Clock Connection for the 8X930A*x*

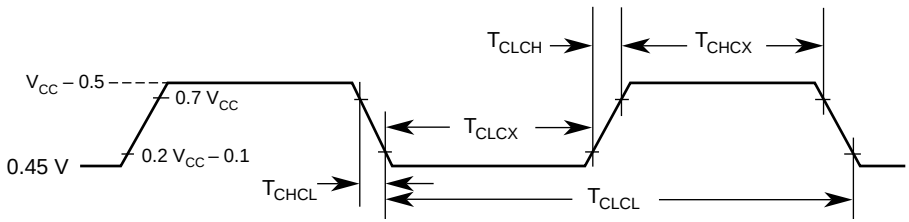

A4119-01

Figure 13-4. External Clock Drive Waveforms

13.4 RESET

A device reset initializes the 8X930A*x* and vectors the CPU to address FF:0000H. A reset is required after applying power. A reset is a means of exiting the idle and powerdown modes or recovering from software malfunctions.

To achieve a valid reset, V_{CC} must be within its normal operating range (see device data sheet) and the reset signal must be maintained for 64 clock cycles ($64T_{OSC}$) after the oscillator has stabilized.

Device reset is initiated in three ways:

- externally, by asserting the RST pin
- internally, if the hardware WDT or the PCA WDT expires
- over the bus, by a USB-initiated reset

These three reset mechanisms are ORed to create a single reset signal for the 8X930A*x*.

The power off flag (POF) in the PCON register indicates whether a reset is a warm start or a cold start. A cold start reset (POF = 1) is a reset that occurs after power has been off or V_{CC} has fallen below 3 V, so the contents of volatile memory are indeterminate. POF is set by hardware when V_{CC} rises from less than 3 V to its normal operating level. See “Power Off Flag” on page 14-1. A warm start reset (POF = 0) is a reset that occurs while the chip is at operating voltage, for example, a reset initiated by a WDT overflow or an external reset used to terminate the idle or power-down modes.

13.4.1 Externally Initiated Resets

To reset the 8X930A*x*, hold the RST pin at a logic high for at least 64 clock cycles ($64T_{OSC}$) while the oscillator is running. Reset can be accomplished automatically at the time power is applied by capacitively coupling RST to V_{CC} (see Figure 13-1 and “Power-on Reset” on page 13-6). The RST pin has a Schmitt trigger input and a pulldown resistor.

13.4.2 WDT Initiated Resets

Expiration of the hardware WDT (overflow) or the PCA WDT (comparison match) generates a reset signal. WDT initiated resets have the same effect as an external reset. See “Watchdog Timer” on page 10-17 and section “PCA Watchdog Timer Mode” on page 11-9.

13.4.3 USB Initiated Resets

The 8X930A*x* can be reset by the host or upstream hub if a reset signal is detected by the SIE. This reset signal is defined as an SE0 held longer than 2.5 µs. A USB-initiated reset will reset all of the 8X930A*x* hardware, even if the device is suspended (in which case it would first wake-up, then reset. See “USB Power Control” on page 14-6 for additional information about USB-related suspend and resume.

In the USB system, an 8X930A*x* chip reset must be communicated to the host to ensure that the host is aware of the state of the 8X930A*x* to avoid being disabled. This requires board-level emulation of a detach and attach signalling upstream whenever there is a chip reset.

NOTE

You must ensure that the time from connection of this USB device to the bus until the entire reset process is complete (including firmware initialization of the 8X930A*x*) is less than 10 ms. After 10 ms, the host may attempt to communicate with the 8X930A*x* to set its device address. If the 8X930A*x* firmware cannot respond to the host at this time, the host may disable the device after three attempts to communicate.

13.4.4 Reset Operation

When a reset is initiated, whether externally, over the bus, or by a WDT, the port pins are immediately forced to their reset condition as a fail-safe precaution, whether the clock is running or not.

The external reset signal and the WDT- and USB-initiated reset signals are combined internally. For an external reset the voltage on the RST pin must be held high for 32 internal clock cycles (T_{CLK}) after the oscillator and on-chip PLL stabilize (approximately 5 ms). For WDT- and USB-initiated resets, a 5-bit counter in the reset logic maintains the signal for the required 32 clock cycles (T_{CLK}). Refer to Table 2-2 on page 2-8.

The CPU checks for the presence of the combined reset signal every $2T_{OSC}$. When a reset is detected, the CPU responds by triggering the internal reset routine. The reset routine loads the SFRs, including the ACC, B, stack pointer, and data pointer registers, with their reset values (see Table 3-5 on page 3-16). Reset does not affect on-chip data RAM or the register file. (However, following a cold start reset, these are indeterminate because V_{CC} has fallen too low or has been off.) Following a synchronizing operation and the configuration fetch, the CPU vectors to address FF:0000. Figure 13-5 shows the reset timing sequence.

While the RST pin is high ALE, PSEN#, and the port pins are weakly pulled high. The first ALE occurs 16 internal clock cycles (T_{CLK}) after the reset signal goes low. For this reason, other devices can not be synchronized to the internal timings of the 8X930A*x*.

NOTE

Externally driving the ALE and/or PSEN# pins to 0 during the reset routine may cause the device to go into an indeterminate state.

Powering up the 8X930A*x* without a reset may improperly initialize the program counter and SFRs and cause the CPU to execute instructions from an undetermined memory location.

13.4.5 Power-on Reset

To automatically generate a reset when power is applied, connect the RST pin to the V_{CC} pin through a 1-µF capacitor as shown in Figure 13-1 on page 13-1.

When V_{CC} is applied, the RST pin rises to V_{CC}, then decays exponentially as the capacitor charges. The time constant must be such that RST remains high (above the turn-off threshold of the Schmitt trigger) long enough for the oscillator to start and stabilize, plus $64T_{OSC}$. At power up, V_{CC} should rise within approximately 10 ms. Oscillator start-up time is a function of the crystal frequency.

During power up, the port pins are in a random state until forced to their reset state by the asynchronous logic.

Reducing V_{CC} quickly to 0 causes the RST pin voltage to momentarily fall below 0 V. This voltage is internally limited and does not harm the device.

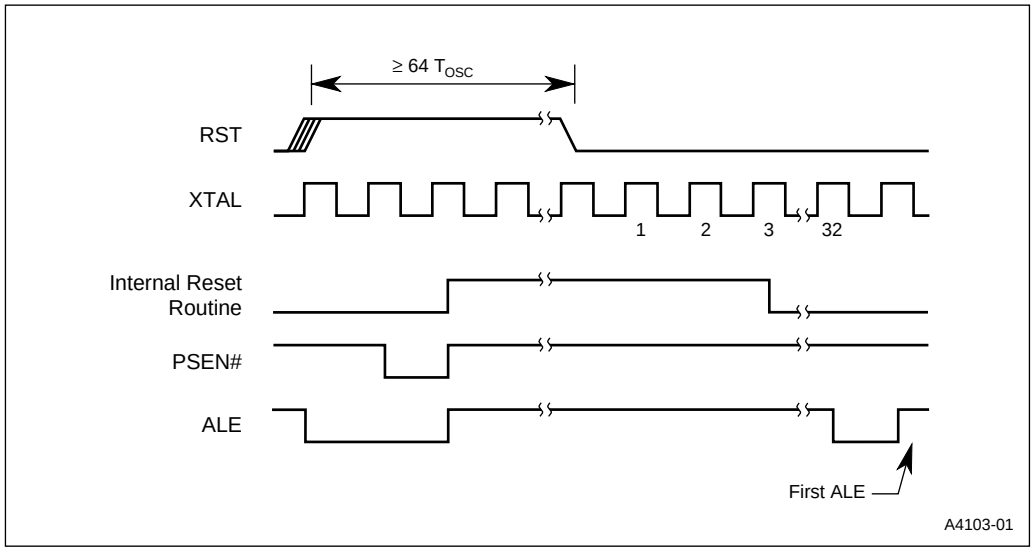

Figure 13-5. Reset Timing Sequence

14

Special Operating Modes

CHAPTER 14
SPECIAL OPERATING MODES

This chapter describes the idle, powerdown, low clock, and on-circuit emulation (ONCE) device operating modes and the USB function suspend and resume operations. The SFRs associated with these operations (PCON and PCON1) are also described.

14.1 GENERAL

The idle and powerdown modes are power reduction modes for use in applications where power consumption is a concern. User instructions activate these modes by setting bits in the PCON register. Program execution halts, but resumes when the mode is exited by an interrupt. While in idle or powerdown modes, the V_{CC} pin is the input for backup power.

ONCE is a test mode that electrically isolates the 8X930A*x* from the system in which it operates.

14.2 POWER CONTROL REGISTERS

The PCON special function register (Figure 14-1) provides two control bits for the serial I/O function, bits for selecting the idle, low clock, and powerdown modes, the power off flag, and two general purpose flags.

The PCON1 SFR (Figure 14-2) provides USB power control, including the USB global suspend/resume and USB function suspend. The PCON1 SFR is discussed further in “USB Power Control” on page 14-6.

14.2.1 Serial I/O Control Bits

The SMOD1 bit in the PCON register is a factor in determining the serial I/O baud rate. See Figure 14-1 and “Baud Rates” on page 12-10.

The SMOD0 bit in the PCON register determines whether bit 7 of the SCON register provides read/write access to the framing error (FE) bit (SMOD0 = 1) or to SM0, a serial I/O mode select bit (SMOD0 = 0). See Figure 14-1 and Figure 12-2 on page 12-5 (SCON).

14.2.2 Power Off Flag

Hardware sets the Power Off Flag (POF) in PCON when V_{CC} rises from < 3 V to > 3 V to indicate that on-chip volatile memory is indeterminate (e.g., at power-on). The POF can be set or cleared by software. After a reset, check the status of this bit to determine whether a cold start reset or a warm start reset occurred (see “Reset” on page 13-4). After a cold start, user software should clear the POF. If POF = 1 is detected at other times, do a reset to re-initialize the chip, since for V_{CC} < 3 V data may have been lost or some logic may have malfunctioned.

PCON

Address: S:87H
Reset State: 00XX 0000B

7							0
SMOD1	SMOD0	LC	POF	GF1	GF0	PD	IDL

Bit Number	Bit Mnemonic	Function
7	SMOD1	Double Baud Rate Bit: When set, doubles the baud rate when timer 1 is used and mode 1, 2, or 3 is selected in the SCON register. See "Baud Rates" on page 12-10.
6	SMOD0	SCON.7 Select: When set, read/write accesses to SCON.7 are to the FE bit. When clear, read/write accesses to SCON.7 are to the SM0 bit. See the SCON register (Figure 12-2 on page 12-5).
5	LC	Low Clock Enable: When this bit is set, the CPU and peripherals (except the USB module) operate at 3 MHz. This bit is automatically set after a reset. Clearing this bit through firmware causes the operating clock to return to the hardware selection speed.
4	POF	Power Off Flag: Set by hardware as V_{CC} rises above 3 V to indicate that power has been off or V_{CC} had fallen below 3 V and that on-chip volatile memory is indeterminate. Set or cleared by software.
3	GF1	General Purpose Flag: Set or cleared by software. One use is to indicate whether an interrupt occurred during normal operation or during idle mode.
2	GF0	General Purpose Flag: Set or cleared by software. One use is to indicate whether an interrupt occurred during normal operation or during idle mode.
1	PD	Powerdown Mode Bit: When set, activates powerdown mode. Cleared by hardware when an interrupt or reset occurs.
0	IDL	Idle Mode Bit: When set, activates idle mode. Cleared by hardware when an interrupt or reset occurs. If IDL and PD are both set, PD takes precedence.

Figure 14-1. Power Control (PCON) Register

PCON1

Address: S:DFH
Reset State: XXXX X000B

7							0
—	—	—	—	—	RWU	GRSM	GSUS

Bit Number	Bit Mnemonic	Function
7:3	—	Reserved: The value read from these bits are indeterminate. Write zeroes to these bits.
2	RWU	Remote Wake-up Bit: (Cleared by hardware) 1 = wake-up. This bit is used by the USB function to initiate a remote wake-up. Set by firmware to drive resume signaling on the USB lines to the host or upstream hub. Cleared by hardware. Note: do not set this bit unless the USB function is suspended (GSUS = 1). See Figure 14-4 on page 14-10.
1	GRSM	Global Resume Bit: (Set by hardware) 1 = resume. Set by hardware when a global resume is detected on the USB lines. This bit is ORed with GSUS to generate the interrupt.† Cleared by software when servicing the GRSM interrupt. (This bit can also be set/cleared by software for testability.) This bit is not set if remote wakeup is used (see RWU). See Figure 14-4 on page 14-10.
0	GSUS	Global Suspend Bit: (Set and cleared by hardware) 1 = suspend. This bit is set by hardware when global suspend is detected on the USB lines. This bit is ORed with the GRSM bit to generate the interrupt.† During this ISR, software should set the PD bit to enter the suspend mode. Cleared by firmware when a resume occurs. See Figure 14-4 on page 14-10.

† Software should prioritize GRSM over GSUS if both bits are set simultaneously.

Figure 14-2. USB Power Control (PCON1) Register

Table 14-1. Pin Conditions in Various Modes

Mode	Program Memory	ALE Pin	PSEN# Pin	Port 0 Pins	Port 1 Pins	Port 2 Pins	Port 3 Pins	SOF# Pin	D_{P0}	D_{M0}
Reset	Don't Care	Weak High	Weak High	Float	Weak High	Weak High	Weak High	Weak High	Float	Float
Idle	Internal	1	1	Data	Data	Data	Data	Data	Data	Data
Idle	External, page mode	1	1	Float	Data	Float	Data	Data	Data	Data
Idle	External, nonpage mode	1	1	Float	Data	Weak High	Data	Data	Data	Data
Power down	Internal	0	0	Data	Data	Data	Data	Data	Float	Float
Power down	External, page mode	0	0	Float	Data	Float	Data	Data	Float	Float
Power down	External nonpage mode	0	0	Float	Data	Weak High	Data	Data	Float	Float
ONCE	Don't Care	Float	Float	Float	Weak High	Weak High	Weak High	Weak High	Weak High	Float

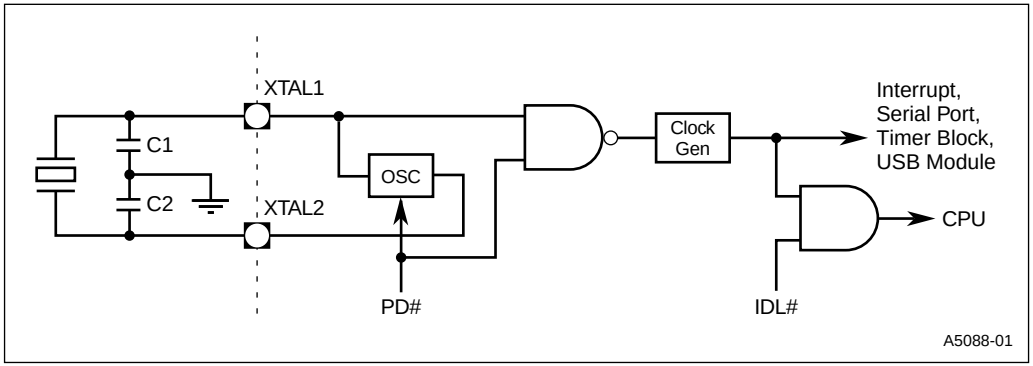

Figure 14-3. Idle and Powerdown Clock Control

14.3 IDLE MODE

Idle mode is a power reduction mode that reduces power consumption to about 40% of normal. In this mode, program execution halts. Idle mode freezes the clocks to the CPU at known states while the peripherals continue to be clocked (Figure 14-3). The CPU status before entering idle mode is preserved; i.e., the program counter, program status word register, and register file retain their data for the duration of idle mode. The contents of the SFRs and RAM are also retained. The status of the port pins depends upon the location of the program memory:

- Internal program memory: the ALE and PSEN# pins are pulled high and the ports 0, 1, 2, and 3 pins are driving the port SFR value (Table 14-1).
- External program memory: the ALE and PSEN# pins are pulled high; the port 0 pins are floating; and the pins of ports 1, 2, and 3 are driving the port SFR value (Table 14-1).

NOTE

If desired, the PCA may be instructed to pause during idle mode by setting the CIDL bit in the CMOD register (Figure 11-7 on page 11-13).

14.3.1 Entering Idle Mode

To enter idle mode, set the PCON register IDL bit. The 8X930A*x* enters idle mode upon execution of the instruction that sets the IDL bit. The instruction that sets the IDL bit is the last instruction executed.

CAUTION

If the IDL bit and the PD bit are set simultaneously, the 8X930A*x* enters powerdown mode.

14.3.2 Exiting Idle Mode

There are two ways to exit idle mode:

- Generate an enabled interrupt. Hardware clears the PCON register IDL bit which restores the clocks to the CPU. Execution resumes with the interrupt service routine. Upon completion of the interrupt service routine, program execution resumes with the instruction immediately following the instruction that activated idle mode. The general purpose flags (GF1 and GF0 in the PCON register) may be used to indicate whether an interrupt occurred during normal operation or during idle mode. When idle mode is exited by an interrupt, the interrupt service routine may examine GF1 and GF0.
- Reset the chip. See “Reset” on page 13-4. A logic high on the RST pin clears the IDL bit in the PCON register directly and asynchronously. This restores the clocks to the CPU. Program execution momentarily resumes with the instruction immediately following the instruction that activated the idle mode and may continue for a number of clock cycles before the internal reset algorithm takes control. Reset initializes the 8X930A*x* and vectors the CPU to address FF:0000H.

NOTE

During the time that execution resumes, the internal RAM cannot be accessed; however, it is possible for the port pins to be accessed. To avoid unexpected outputs at the port pins, the instruction immediately following the instruction that activated idle mode should not write to a port pin or to the external RAM.

14.4 USB POWER CONTROL

The 8X930A*x* supports USB power control through firmware, including global suspend/resume and remote wake-up. For flow charts of these operations, see Figure 14-4 on page 14-10.

14.4.1 Global Suspend Mode

When a global suspend is detected by the 8X930A*x*, the global suspend bit (GSUS in PCON1) is set and the GS/Resume interrupt is generated. Global suspend is defined as bus inactivity for more than 3 ms on the USB lines. A device that is already in suspend mode will not change state. Hardware does not invoke any particular power-saving mode on detection of a global suspend. You must implement power control through firmware within the global suspend/resume ISR.

NOTE

Firmware must set the PD bit (PCON.1 in Figure 14-1 on page 14-2).

For global suspend on a bus powered device, firmware must put the 8X930A*x* into powerdown mode to meet the USB limit of 500 µA. For consistency, it is recommended that you put self-powered devices into powerdown mode as well.

14.4.1.1 Powerdown Mode

The powerdown mode places the 8X930A*x* in a very low power state. Powerdown mode stops the oscillator and freezes all clocks at known states (Figure 14-3). The CPU status prior to entering powerdown mode is preserved, i.e., the program counter, program status word register, and register file retain their data for the duration of powerdown mode. In addition, the SFRs and RAM contents are preserved. The status of the port pins depends on the location of the program memory:

- Internal program memory: the ALE and PSEN# pins are pulled low and the ports 0, 1, 2, and 3 pins are reading data (Table 14-1 on page 14-4).
- External program memory: the ALE and PSEN# pins are pulled low; the port 0 pins are floating; and the pins of ports 1, 2, and 3 are reading data (Table 14-1).

NOTE

V_{CC} may be reduced to as low as 2 V during powerdown to further reduce power dissipation. Take care, however, that V_{CC} is not reduced until powerdown is invoked.

14.4.1.2 Entering Powerdown Mode

To enter powerdown mode, set the PCON register PD bit. The 8X930A*x* enters powerdown mode upon execution of the instruction that sets the PD bit. The instruction that sets the PD bit is the last instruction executed.

CAUTION

Do not put the 8X930A*x* into powerdown mode unless the USB suspend signal is detected on the USB lines (GSUS = 1). Otherwise, the device will not be able to wake up from powerdown mode by a resume signal sent through the USB lines. See “USB Power Control” on page 14-6.

14.4.1.3 Exiting Powerdown Mode

CAUTION

If V_{CC} was reduced during the powerdown mode, do not exit powerdown until V_{CC} is restored to the normal operating level.

There are two ways to exit the powerdown mode:

1. Generate an enabled external interrupt. The interrupt signal must be held active long enough of the oscillator to restart and stabilize (normally less than 10 ms). Hardware clears the PD bit in the PCON register which starts the oscillator and restores the clocks to the CPU and peripherals. Execution resumes with the interrupt service routine. Upon completion of the interrupt service routine, program execution resumes with the instruction immediately following the instruction that activated powerdown mode.

   NOTE

   To enable an external interrupt, set the IEN0 register EX0 and/or EX1 bit[s]. The external interrupt used to exit powerdown mode must be configured as level sensitive and must be assigned the highest priority. Holding the interrupt pin (INT0# or INT1#) low restarts the oscillator and bringing the pin high completes the exit. The duration of the interrupt signal must be long to allow the oscillator to stabilize (normally less than 10 ms).

2. Generate a reset. See “Reset” on page 13-4. A logic high on the RST pin clears the PD bit in the PCON register directly and asynchronously. This starts the oscillator and restores the clocks to the CPU and peripherals. Program execution momentarily resumes with the instruction immediately following the instruction that activated powerdown and may continue for a number of clock cycles before the internal reset algorithm takes control. Reset initializes the 8X930A*x* and vectors the CPU to address FF:0000H.

   NOTE

   During the time that execution resumes, the internal RAM cannot be accessed; however, it is possible for the port pins to be accessed. To avoid unexpected outputs at the port pins, the instruction immediately following the instruction

that activated the powerdown mode should not write to a port pin or to the external RAM.

14.4.2 Global Resume Mode

When a global resume is detected by the 8X930A*x*, the global resume bit (GRSM of PCON1) is set and the GS/Resume interrupt is generated. As soon as resume signaling is detected on the USB lines, the oscillator is restarted. A resume condition is defined as a "J to anything" transition (K transition or reset signaling on the USB lines).

Upon detection of a resume condition, the 8X930A*x* applies power to the USB transceivers, the crystal oscillator, and the PLL. After the clocks are restarted, the CPU program continues execution from where it was when the device was put into powerdown mode. The device then services the Resume interrupt service routine. After executing the Resume ISR, the 8X930A*x* resumes operation from where it was when it was interrupted by the suspend interrupt.

14.4.3 USB Remote Wake-up

The 8X930A*x* can initiate resume signaling to the USB lines through remote wake-up of the USB function while it is in powerdown/idle mode. While in powerdown mode, remote wake-up has to be initiated through assertion of an enabled external interrupt. The external interrupt has to be enabled and it must be configured with level trigger and with higher priority than a Suspend/Resume interrupt. A function resume restarts the clocks to the 8X930A*x* and program execution branches to an external interrupt service routine.

Within this external ISR, you must set the remote wake-up bit (RWU in PCON1) to drive resume signaling on the USB lines to the host or upstream hub. After executing the external ISR, the program continues execution from where it was put into powerdown mode and the 8X930A*x* resumes normal operation.

14.5 LOW CLOCK MODE

Low clock mode is the default operation mode for the 8X930A*x* upon reset. After reset, the CPU and peripherals (excluding the USB module) default to a 3 MHz clock rate while the USB module always operates at the hardware-selected clock rate. Low clock mode ensures that the I_{CC} drawn by the 8X930A*x* upon reset and in the unconfigured state is less than one unit load (100 mA) for the whole USB device.

After configuration (and given that the request for more than one unit load of I_{CC} is granted), you may switch the clock of the CPU and the peripherals back to the hardware-selected clock rate for performance reasons.

14.5.1 Entering Low Clock Mode

Low clock mode can be invoked through firmware anytime the device is unconfigured by the host. To invoke low clock Mode, set the LC bit in the PCON Register (Figure 14-1).

NOTE

After reset, the 8X930A*x* automatically switches to low clock mode, regardless of whether the LC bit has been set.

14.5.2 Exiting Low Clock Mode

To switch the clock of the CPU and the peripherals to the hardware-selected clock rate, clear the LC bit in the PCON SFR (Figure 14-1). The hardware clock rate selection determines the highest operating clock rate for the 8X930A*x*.

14.6 ON-CIRCUIT EMULATION (ONCE) MODE

The on-circuit emulation (ONCE) mode permits external testers to test and debug 8X930A*x*-based systems without removing the chip from the circuit board. A clamp-on emulator or test CPU is used in place of the 8X930A*x* which is electrically isolated from the system.

14.6.1 Entering ONCE Mode

To enter the ONCE mode:

1. Assert RST to initiate a device reset. See “Externally Initiated Resets” on page 13-5 and the reset waveforms in Figure 13-5 on page 13-7.
2. While holding RST asserted, apply and hold logic levels to I/O pins as follows: PSEN# = low, P0.7:5 = low, P0.4 = high, P0.3:0 = low (i.e., port 0 = 10H).
3. Deassert RST, then remove the logic levels from PSEN# and port 0.

These actions cause the 8X930A*x* to enter the ONCE mode. Port 1, 2, and 3 pins are weakly pulled high and port 0, ALE, and PSEN# pins are floating (Table 14-1 on page 14-4). Thus the device is electrically isolated from the remainder of the system which can then be tested by an emulator or test CPU. Note that in the ONCE mode the device oscillator remains active.

14.6.2 Exiting ONCE Mode

To exit ONCE mode, reset the device.

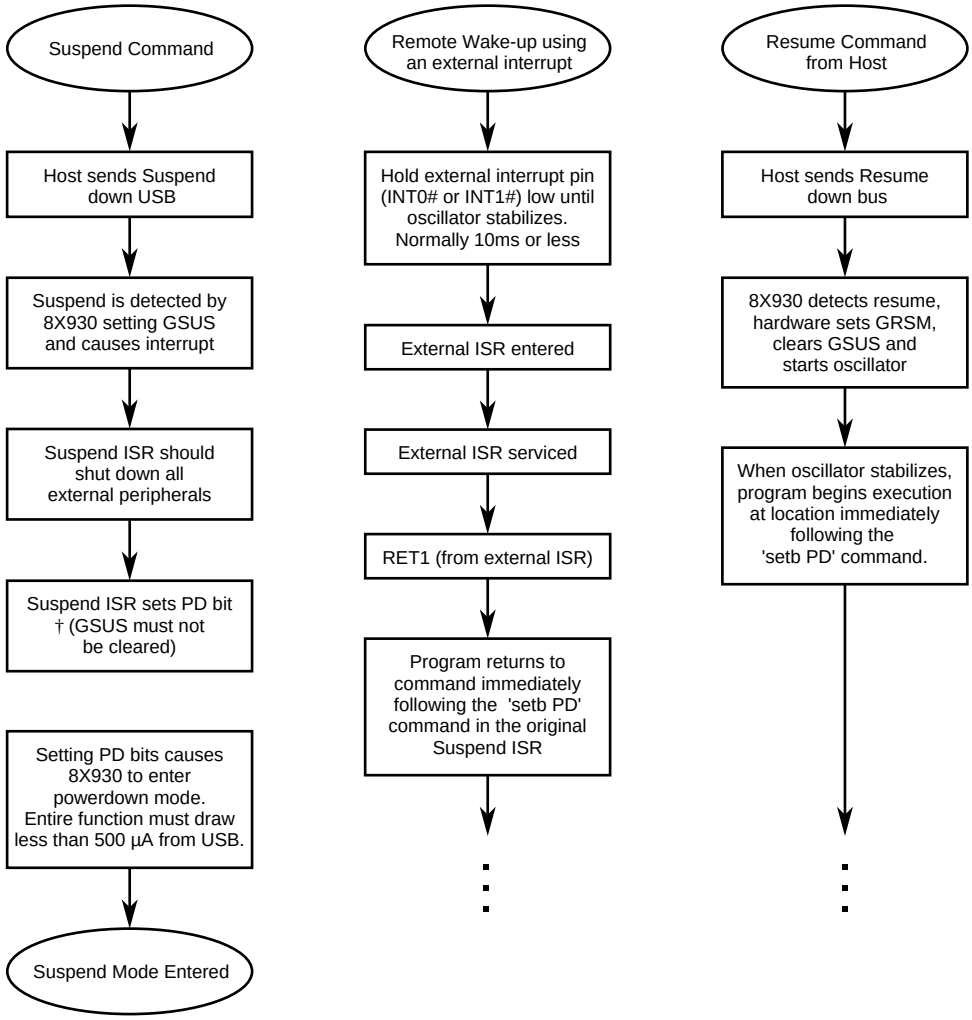

† If GSUS is cleared, the 8X930 will not be able to detect resume signaling from the host.

A5089-01

Figure 14-4. Suspend/Resume Program with/without Remote Wake-up

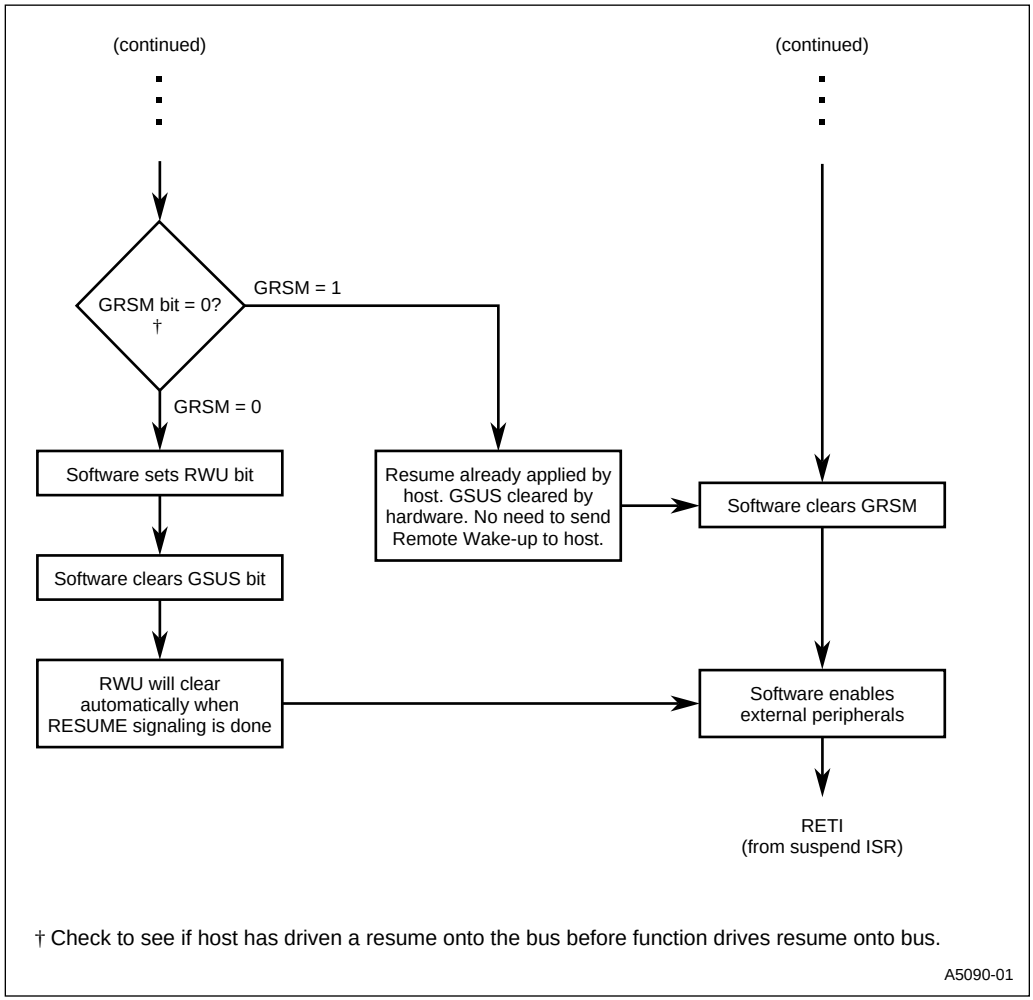

Figure 14-4. Suspend/Resume Program with/without Remote Wake-up (Continued)

15

External Memory Interface

CHAPTER 15
EXTERNAL MEMORY INTERFACE

This chapter covers various aspects of the external memory interface. It describes the signals associated with external memory operations, page mode/nonpage mode operation, and external bus cycle timing (for normal accesses, accesses with configurable wait states, accesses with real-time wait states, and configuration byte accesses). This chapter also describes the real-time wait state register (WCON), gives the status of the pins for ports P0 and P2 during bus cycles and bus idle, and includes several external memory design examples.

15.1 OVERVIEW

The 8X930A*x* interfaces with a variety of external memory devices. It can be configured to have a 16-bit, 17-bit, or 18-bit external address bus. Data transfer operations (8 bits) are multiplexed on the address bus.

The external memory interface comprises the external bus (ports 0 and 2, and when so configured, address bits A17 and A16) and the bus control signals described in Table 15-1. Chip configuration bytes (see Chapter 4, “Device Configuration”) provide several interface options: page mode or nonpage mode for external code fetches; the number of external address bits (16, 17, or 18); the address ranges for RD#, WR#, and PSEN#; and the number of preprogrammed external wait states to extend RD#, WR#, PSEN#, or ALE. Real-time wait states can be enabled with special function register WCON.1:0. You can use these options to tailor the interface to your application. For additional information refer to “Configuring the External Memory Interface” on page 4-7.

The external memory interface operates in either page mode or nonpage mode. Figure 15-1 shows the structure of the external address bus for page mode and nonpage mode operation. Page mode provides increased performance by reducing the time for external code fetches. Page mode does not apply to code fetches from on-chip memory.

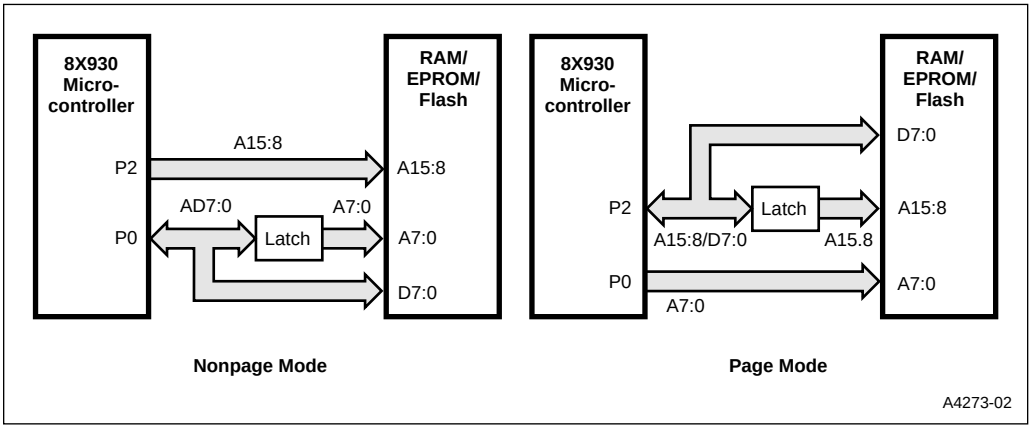

Figure 15-1. Bus Structure in Nonpage Mode and Page Mode

Table 15-1. External Memory Interface Signals

Signal Name	Type	Description	Alternate Function
A17	O	**Address Line 17.**	P1.7/CEX4/WCLK
A16	O	**Address Line 16.** See RD#.	P3.7/RD#
A15:8†	O	**Address Lines.** Upper address for external bus (non-page mode).	P2.7:0
AD7:0†	I/O	**Address/Data Lines.** Multiplexed lower address and data for the external bus (non-page mode).	P0.7:0
ALE	O	**Address Latch Enable.** ALE signals the start of an external bus cycle and indicates that valid address information is available on lines A15:8 and AD7:0.	PROG#
EA#	I	**External Access**. Directs program memory accesses to on-chip or off-chip code memory. For EA# strapped to ground, all program memory accesses are off-chip. For EA# = strapped to V_{CC}, an access is to on-chip ROM if the address is within the range of the on-chip ROM; otherwise the access is off-chip. The value of EA# is latched at reset. For devices without on-chip ROM, EA# must be strapped to ground.	V_{PP}
PSEN#	O	**Program Store Enable**. Read signal output. This output is asserted for a memory address range that depends on bits RD0 and RD1 in the configuration byte (see also RD#): RD1 RD0 Address Range for Assertion 0 0 All addresses 0 1 All addresses 1 0 All addresses 1 1 All addresses Š 80:0000H	—
RD#	O	**Read or 17th Address Bit (A16).** Read signal output to external data memory or 17th external address bit (A16), depending on the values of bits RD0 and RD1 in configuration byte. (See PSEN#): **RD1 RD0 Function** 0 0 The pin functions as A16 only. 0 1 The pin functions as A16 only. 1 0 The pin functions as P3.7 only. 1 1 RD# asserted for reads at all addresses ≤7F:FFFFH.	P3.7/A16
WAIT#	I	**Real-time Wait State Input.** The real-time WAIT# input is enabled by writing a logical '1' to the WCON.0 (RTWE) bit at S:A7H. During bus cycles, the external memory system can signal 'system ready' to the microcontroller in real time by controlling the WAIT# input signal on the port 1.6 input.	P1.6/CEX3
WCLK	O	**Wait Clock Output.** The real-time WCLK output is driven at port 1.7 (WCLK) by writing a logical '1' to the WCON.1 (RTWCE) bit at S:A7H. When enabled, the WCLK output produces a square wave signal with a period of one-half the oscillator frequency.	A17/P1.7/CEX4
WR#	O	**Write**. Write signal output to external memory. WR# is asserted for writes to all valid memory locations.	P3.6

† If the chip is configured for page-mode operation, port 0 carries the lower address bits (A7:0), and port 2 carries the upper address bits (A15:8) and the data (D7:0).

The reset routine configures the 8X930A*x* for operation in page mode or nonpage mode according to bit 1 of configuration byte UCONFIG0. P0 carries address A7:0 while P2 carries address A15:8. Data D7:0 is multiplexed with A7:0 on P0 in nonpage mode and with A15:8 on P2 in page mode.

Table 15-1 describes the external memory interface signals. The address and data signals (AD7:0 on port 0 and A15:8 on port 2) are defined for nonpage mode.

15.2 EXTERNAL BUS CYCLES

This section describes the bus cycles the 8X930A*x* executes to fetch code, read data, and write data in external memory. Both page mode and nonpage mode are described and illustrated. For simplicity, the accompanying figures depict the bus cycle waveforms in idealized form and do not provide precise timing information. This section does not cover wait states (see "External Bus Cycles With Configurable Wait States" on page 15-8) or configuration byte bus cycles (see "Configuration Byte Bus Cycles" on page 15-15). For bus cycle timing parameters refer to the 8X930A*x* datasheet.

An "inactive external bus" exists when the 8X930A*x* is not executing external bus cycles. This occurs under any of the three following conditions:

- Bus Idle (The chip is in normal operating mode but no external bus cycles are executing.)
- The chip is in idle mode
- The chip is in powerdown mode

15.2.1 Bus Cycle Definitions

Table 15-2 lists the types of external bus cycles. It also shows the activity on the bus for nonpage mode and page mode bus cycles with no wait states. There are three types of nonpage mode bus cycles: code fetch, data read, and data write. There are four types of page mode bus cycles: code fetch (page miss), code fetch (page hit), data read, and data write. The data read and data write cycles are the same for page mode and nonpage mode (except the multiplexing of D7:0 on ports 0 and 2).

15.2.2 Nonpage Mode Bus Cycles

In nonpage mode, the external bus structure is the same as for MCS 51 microcontrollers. The upper address bits (A15:8) are on port 2, and the lower address bits (A7:0) are multiplexed with the data (D7:0) on port 0. External code read bus cycles execute in approximately two state times. See Table 15-2 and Figure 15-2. External data read bus cycles (Figure 15-3) and external write bus cycles (Figure 15-4) execute in approximately three state times. For the write cycle (Figure 15-4), a third state is appended to provide recovery time for the bus. Note that the write signal WR# is asserted for all memory regions, except for the case of RD1:0 = 11, where WR# is asserted for regions 00:–01: but **not** for regions FE:–FF:.

Table 15-2. Bus Cycle Definitions (No Wait States)

Mode	Bus Cycle	Bus Activity		
		State 1	State 2	State 3
Nonpage Mode	Code Read	ALE	RD#/PSEN#, code in	
	Data Read (2)	ALE	RD#/PSEN#	data in
	Data Write (2)	ALE	WR#	WR# high, data out
Page Mode	Code Read, Page Miss	ALE	RD#/PSEN#, code in	
	Code Read, Page Hit (3)	PSEN#, code in		
	Data Read (2)	ALE	RD#/PSEN#	data in
	Data Write (2)	ALE	WR#	WR# high, data out

NOTES:
1. Signal timing implied by this table is approximate (idealized).
2. Data read (page mode) = data read (nonpage mode) and write (page mode) = write (nonpage mode) except that in page mode data appears on P2 (multiplexed with A15:0), whereas in nonpage mode data appears on P0 (multiplexed with A7:0).
3. The initial code read page hit bus cycle can execute only following a code read page miss cycle.

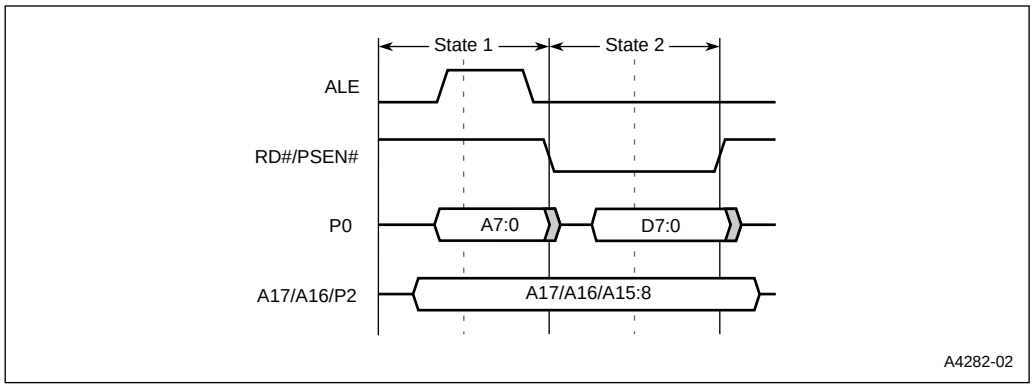

Figure 15-2. External Code Fetch (Nonpage Mode)

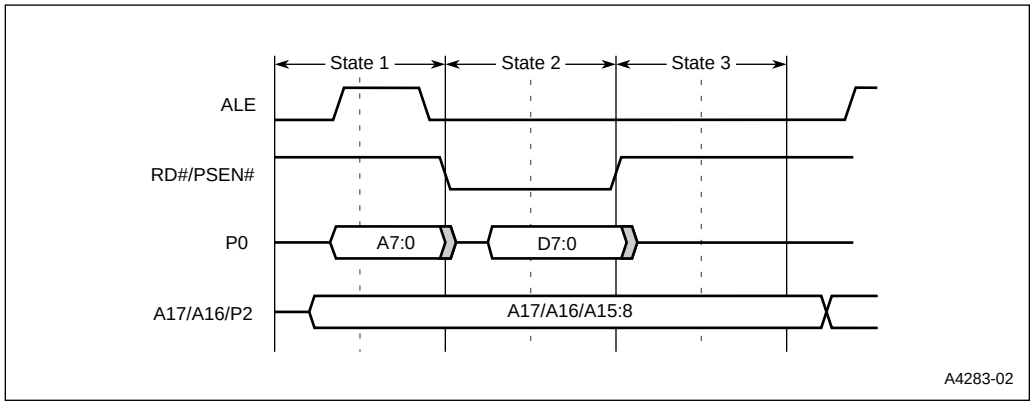

Figure 15-3. External Data Read (Nonpage Mode)

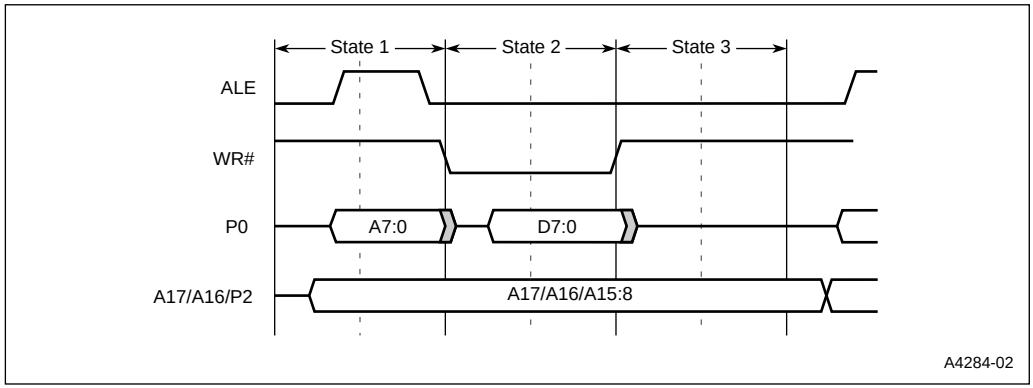

Figure 15-4. External Data Write (Nonpage Mode)

15.2.3 Page Mode Bus Cycles

Page mode increases performance by reducing the time for external code fetches. Under certain conditions the controller fetches an instruction from external memory in one state time instead of two (Table 15-2). Page mode does not affect internal code fetches.

The first code fetch to a 256-byte "page" of memory always uses a two-state bus cycle. Subsequent successive code fetches to the same page (*page hits*) require only a one-state bus cycle. When a subsequent fetch is to a different page (a *page miss*), it again requires a two-state bus cycle. The following external code fetches are always page-miss cycles:

- the first external code fetch after a page rollover†
- the first external code fetch after an external data bus cycle
- the first external code fetch after powerdown or idle mode
- the first external code fetch after a branch, return, interrupt, etc.

In page mode, the 8X930A*x* bus structure differs from the bus structure in MCS 51 controllers (Figure 15-1). The upper address bits A15:8 are multiplexed with the data D7:0 on port 2, and the lower address bits (A7:0) are on port 0.

Figure 15-5 shows the two types of external bus cycles for code fetches in page mode. The *page-miss* cycle is the same as a code fetch cycle in nonpage mode (except D7:0 is multiplexed with A15:8 on P2.). For the *page-hit* cycle, the upper eight address bits are the same as for the preceding cycle. Therefore, ALE is not asserted, and the values of A15:8 are retained in the address latches. In a single state, the new values of A7:0 are placed on port 0, and memory places the instruction byte on port 2. Notice that a page hit reduces the available address access time by one state. Therefore, faster memories may be required to support page mode.

Figure 15-6 and Figure 15-7 show the bus cycles for data reads and data writes in page mode. These cycles are identical to those for nonpage mode, except for the different signals on ports 0 and 2.

† A page rollover occurs when the address increments from the top of one 256-byte page to the bottom of the next (e.g., from FF:FAFFH to FF:FB00H).

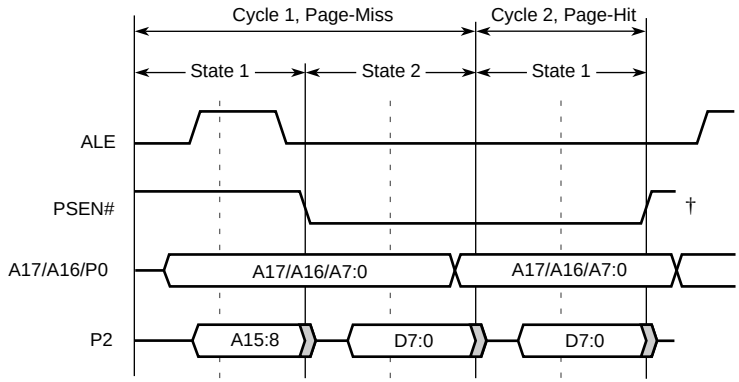

† During a sequence of page hits, PSEN# remains low until the end of the last page-hit cycle.

A4274-02

Figure 15-5. External Code Fetch (Page Mode)

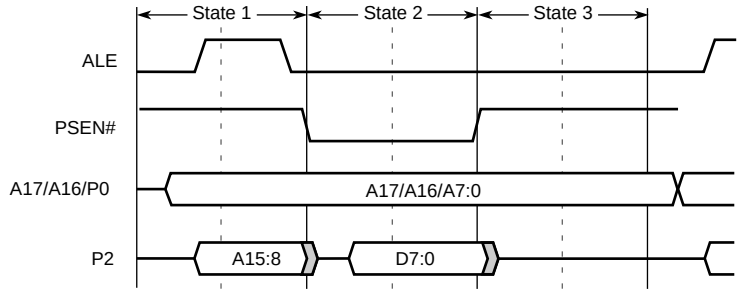

A4275-02

Figure 15-6. External Data Read (Page Mode)

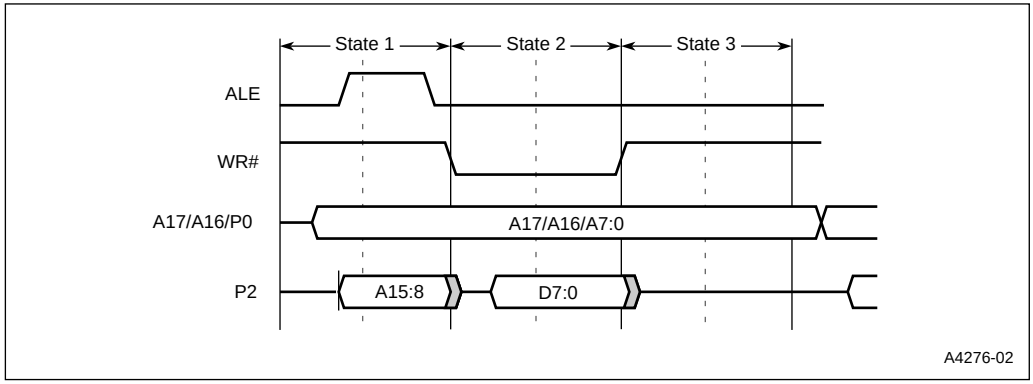

Figure 15-7. External Data Write (Page Mode)

15.3 WAIT STATES

The 8X930A*x* provides three types of wait state solutions to external memory problems: real-time, RD#/WR#/PSEN#, and ALE wait states. The 8X930A*x* supports traditional real-time wait state operations for dynamic bus control. Real-time wait state operations are controlled by means of the WCON special function register. See "External Bus Cycles with Real-time Wait States" on page 15-11.

In addition, the 8X930A*x* device can be configured at reset to add wait states to external bus cycles by extending the ALE or RD#/WR#/PSEN# pulses. See "Wait State Configuration Bits" on page 4-11.

You can configure the chip to use multiple types of wait states. Accesses to on-chip code and data memory always use zero wait states. The following sections demonstrate wait state usage.

15.4 EXTERNAL BUS CYCLES WITH CONFIGURABLE WAIT STATES

This section describes the code fetch, read data, and write data external bus cycles with configurable wait states. Both page mode and nonpage mode operation are described and illustrated. For simplicity, the accompanying figures depict the bus cycle waveforms in idealized form and do not provide precise timing information.

15.4.1 Extending RD#/WR#/PSEN#

You can use bits WSA1:0# in configuration byte UCONFIG0 (Figure 4-3 on page 4-5) and WSB1:0# in UCONFIG1 (Figure 4-4 on page 4-6) to add 0, 1, 2, or 3 wait states to the RD#/WR#/PSEN pulses. Figure 15-8 shows the nonpage mode code fetch bus cycle with one RD#/PSEN# wait state. The wait state extends the bus cycle to three states. Figure 15-9 shows the nonpage mode data write bus cycle with one WR# wait state. The wait state extends the bus cycle to four states. The waveforms in Figure 15-9 also apply to the nonpage mode data read external bus cycle if RD#/PSEN# is substituted for WR#.

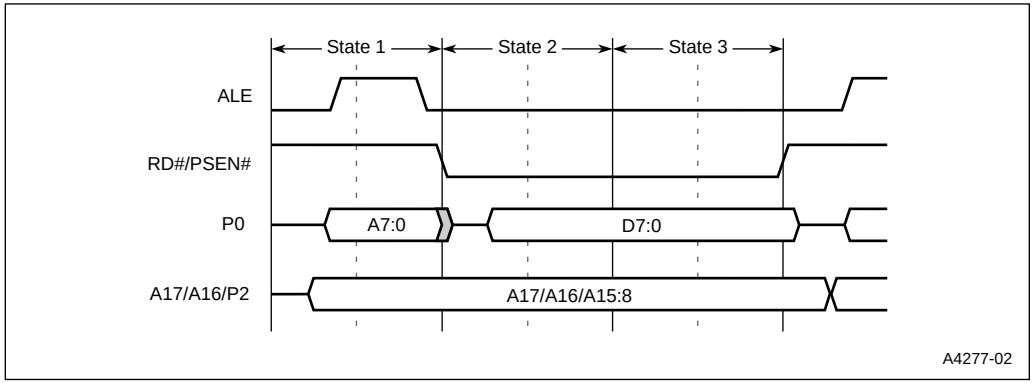

Figure 15-8. External Code Fetch (Nonpage Mode, One RD#/PSEN# Wait State)

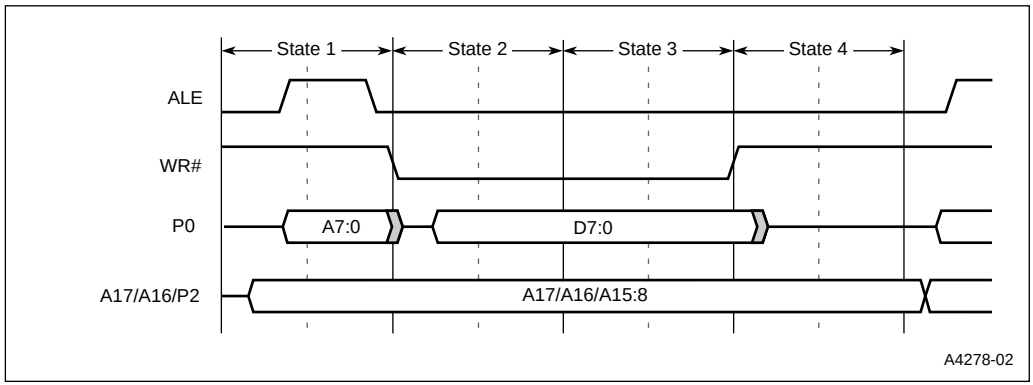

Figure 15-9. External Data Write (Nonpage Mode, One WR# Wait State)

15.4.2 Extending ALE

Use the XALE# bit of configuration byte UCONFIG0 to extend the ALE pulse 1 wait state. Figure 15-10 shows the nonpage mode code fetch external bus cycle with ALE extended. The wait state extends the bus cycle from two states to three. For read and write external bus cycles, the extended ALE extends the bus cycle from three states to four.

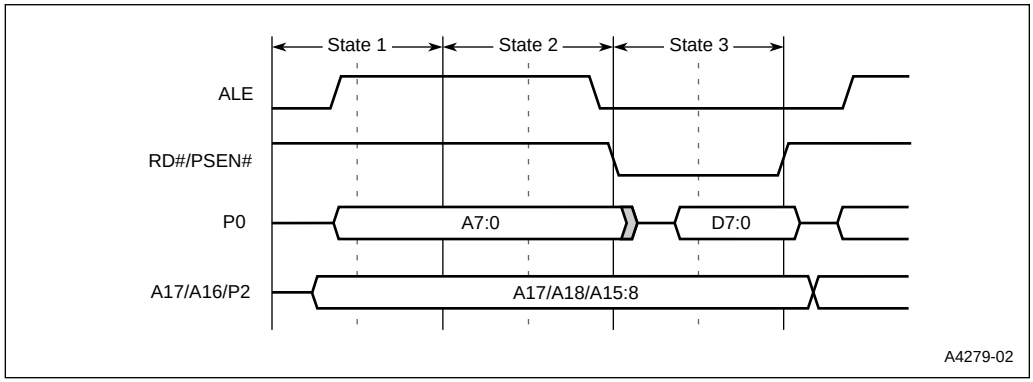

Figure 15-10. External Code Fetch (Nonpage Mode, One ALE Wait State)

15.5 EXTERNAL BUS CYCLES WITH REAL-TIME WAIT STATES

There are two ways of using real-time wait states: the WAIT# pin used as an input bus control and the WAIT# signal used in conjunction with the WCLK output signal. These two signals are enabled with the WCON special function register in the SFR space at S:0A7H. Refer to Figure 15-11.

NOTE

The WAIT# and WCLK signals are alternate functions for the port 1.6:7 input and output buffers. Use of the alternate functions may conflict with wait state operation.

When WAIT# is enabled, PCA module 3 is disabled on port 1.6 (CEX3) and resumes operation only when the WAIT# function is disabled. The same relationship exists between WCLK on port 1.7 (CEX4) and PCA module 4. It is not advisable to alternate between PCA operations and real-time wait-state operations at port 1.6 (CEX3/WAIT#) or port 1.7 (CEX4/WCLK).

Port 1.7 can also be enabled to drive address signal A17 in some memory designs. The A17 address signal always takes priority over the alternate functions (CEX4 and WCLK). Even if RTWCE is enabled in WCON.1, the WCLK output does not appear during bus cycles enabled to drive address A17. The use of WAIT# as an input on port 1.6 is unaffected by address signals.

WCON Address: S:A7H
Reset: XXXX XX00B

7							0
—	—	—	—	—	—	RTWCE	RTWE

Bit Number	Bit Mnemonic	Function
7:2	—	Reserved: The values read from these bits are indeterminate. Write “0” to these bits.
1	RTWCE	Real-time WAIT CLOCK enable. Write a ‘1’ to this bit to enable the WAIT CLOCK on port 1.7 (WCLK). The square wave output signal is one-half the oscillator frequency.
0	RTWE	Real-time WAIT# enable. Write a ‘1’ to this bit to enable real-time wait state input on port 1.6 (WAIT#).

Figure 15-11. Real-time Wait State Control Register (WCON)

15.5.1 Real-time WAIT# Enable (RTWE)

The real-time WAIT# input is enabled by writing a logical '1' to the WCON.0 (RTWE) bit at S:A7H. During bus cycles, the external memory system can signal "system ready" to the microcontroller in real time by controlling the WAIT# input signal on the port 1.6 input. Sampling of WAIT# is coincident with the activation of RD#/PSEN# or WR# signals driven low during a bus cycle. A "not-ready" condition is recognized by the WAIT# signal held at V_{IL} by the external memory system. Use of PCA module 3 may conflict with your design. Do not use the PCA module 3 I/O (CEX3) interchangeably with the WAIT# signal on the port 1.3 input. Setup and hold times are illustrated in the current datasheet.

15.5.2 Real-time WAIT CLOCK Enable (RTWCE)

The real-time WAIT CLOCK output is driven at port 1.7 (WCLK) by writing a logical '1' to the WCON.1 (RTWCE) bit at S:A7H. When enabled, the WCLK output produces a square wave signal with a period of one-half the oscillator frequency. Use of PCA module 4 may conflict with your design. Do not use the PCA module 4 I/O (CEX4) interchangeably with the WCLK output. Use of address signal A17 inhibits both WCLK and PCA module 4 usage of port 1.7.

15.5.3 Real-time Wait State Bus Cycle Diagrams

Figure 15-12 shows the code fetch/data read bus cycle in nonpage mode. Figure 15-14 depicts the data read cycle in page mode.

CAUTION

The real-time wait function has critical external timing for code fetch. For this reason, it is not advisable to use the real-time wait feature for code fetch in page mode.

The data write bus cycle in nonpage mode is shown in Figure 15-13. Figure 15-15 shows the data write bus cycle in page mode.

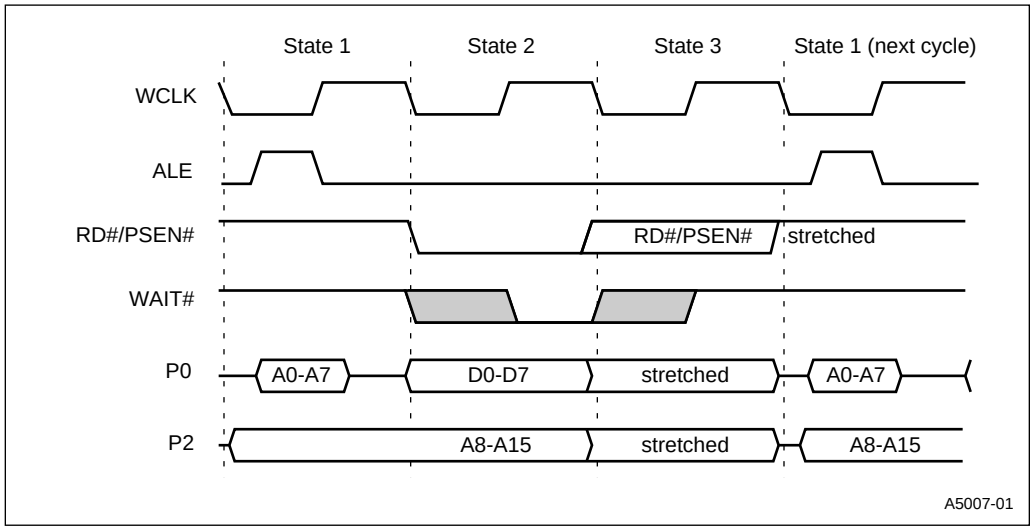

Figure 15-12. External Code Fetch/Data Read (Nonpage Mode, Real-time Wait State)

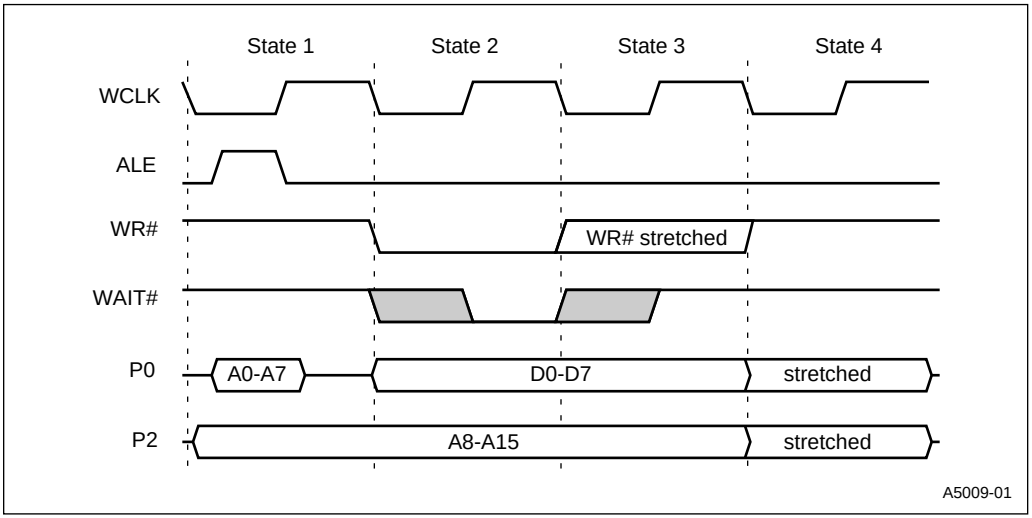

Figure 15-13. External Data Write (Nonpage Mode, Real-time Wait State)

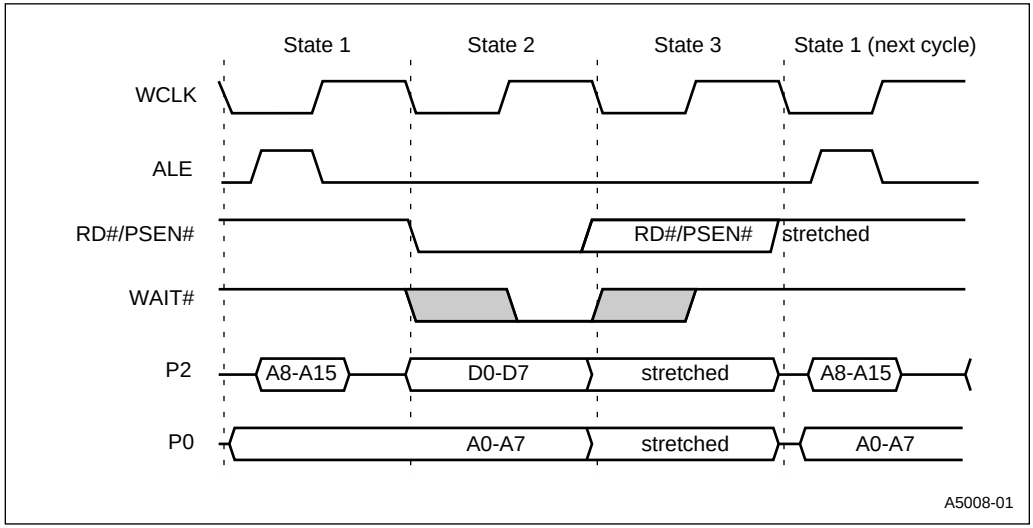

Figure 15-14. External Data Read (Page Mode, Real-time Wait State)

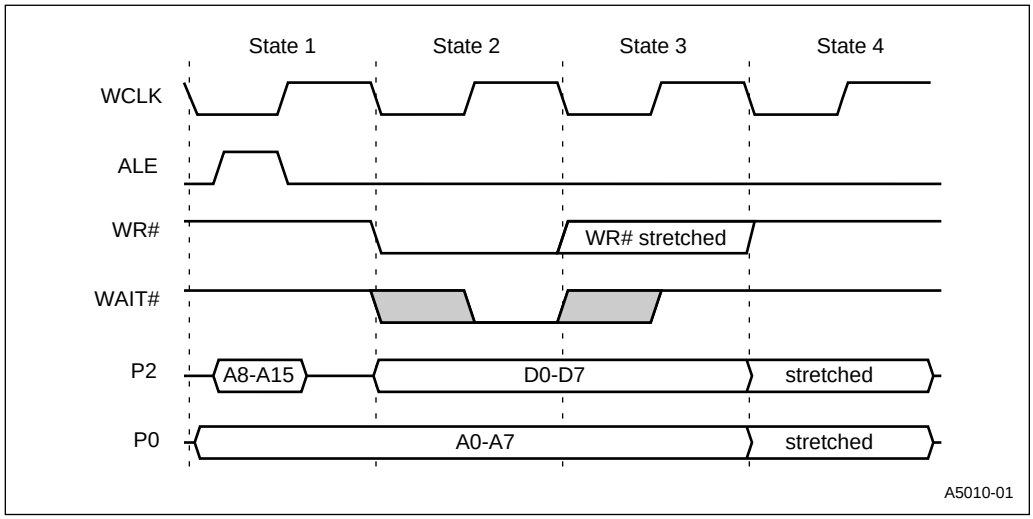

Figure 15-15. External Data Write (Page Mode, Real-time Wait State)

15.6 CONFIGURATION BYTE BUS CYCLES

If EA# = 0, devices obtain configuration information from a configuration array in external memory. This section describes the bus cycles executed by the reset routine to fetch user configuration bytes from external memory. Configuration bytes are discussed in Chapter 4, “Device Configuration.”

To determine whether the external memory is set up for page mode or nonpage mode operation, the 8X930A*x* accesses external memory using internal address FF:FFF8H (UCONFIG0). See states 1–4 in Figure 15-16. If the external memory is set up for page mode, it places UCONFIG0 on P2 as D7:0, overwriting A15:8 (FFH). If external memory is set up for nonpage mode, A15:8 is not overwritten. The 8X930A*x* examines P2 bit 1. Subsequent configuration byte fetches are in page mode if P2.1 = 0 and in nonpage mode if P2.1 = 1. The 8X930A*x* fetches UCONFIG0 again (states 5–8 in Figure 15-16) and then UCONFIG1 via internal address FF:FFF9H.

The configuration byte bus cycles always execute with ALE extended and one PSEN# wait state.

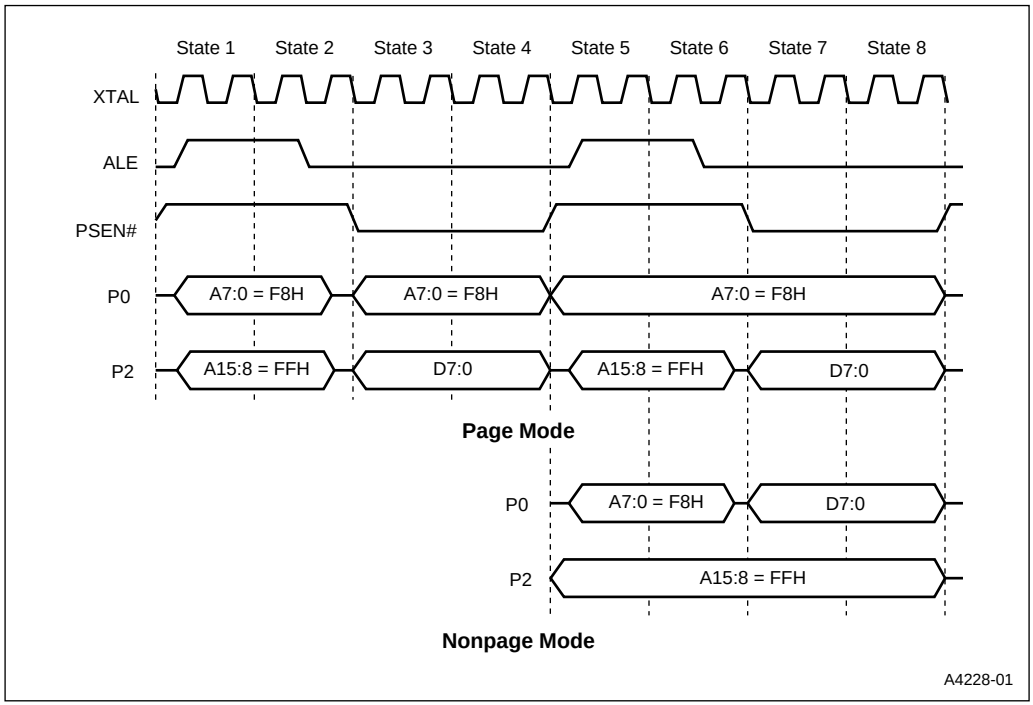

Figure 15-16. Configuration Byte Bus Cycles

15.7 PORT 0 AND PORT 2 STATUS

This section summarizes the status of the port 0 and port 2 pins when these ports are used as the external bus. A more comprehensive description of the ports and their use is given in Chapter 9, “Input/Output Ports.”

When port 0 and port 2 are used as the external memory bus, the signals on the port pins can originate from three sources:

- the 8X930A*x* CPU (address bits, data bits)
- the port SFRs: P0 and P2 (logic levels)
- an external device (data bits)

The port 0 pins (but not the port 2 pins) can also be held in a high-impedance state. Table 15-3 lists the status of the port 0 and port 2 pins when the chip in is the normal operating mode and the external bus is idle or executing a bus cycle.

Table 15-3. Port 0 and Port 2 Pin Status In Normal Operating Mode

Port	8-bit/16-bit Addressing	Nonpage Mode		Page Mode	
		Bus Cycle	Bus Idle	Bus Cycle	Bus Idle
Port 0	8 or 16	AD7:0 (1)	High Impedance	A7:0 (1)	High Impedance
Port 2	8	P2 (2)	P2	P2/D7:0 (2)	High Impedance
	16	A15:8	P2	A15:8/D7:0	High Impedance

NOTES:
1. During external memory accesses, the CPU writes FFH to the P0 register and the register contents are lost.
2. The P2 register can be used to select 256-byte pages in external memory.

15.7.1 Port 0 and Port 2 Pin Status in Nonpage Mode

In nonpage mode, the port pins have the same signals as those on the 8XC51FX. For an external memory instruction using a 16-bit address, the port pins carry address and data bits during the bus cycle. However, if the instruction uses an 8-bit address (e.g., MOVX @Ri), the contents of P2 are driven onto the pins. These pin signals can be used to select 256-bit pages in external memory.

During a bus cycle, the CPU always writes FFH to P0, and the former contents of P0 are lost. A bus cycle does not change the contents of P2. When the bus is idle, the port 0 pins are held at high impedance, and the contents of P2 are driven onto the port 2 pins.

15.7.2 Port 0 and Port 2 Pin Status in Page Mode

In a page-mode bus cycle, the data is multiplexed with the upper address byte on port 2. However, if the instruction uses an 8-bit address (e.g., MOVX @Ri), the contents of P2 are driven onto the pins when data is not on the pins. These logic levels can be used to select 256-bit pages in external memory. During bus idle, the port 0 and port 2 pins are held at high impedance. For port pin status when the chip in is idle mode, powerdown mode, or reset, see Chapter 14, "Special Operating Modes."

15.8 EXTERNAL MEMORY DESIGN EXAMPLES

This section presents several external memory designs for 8X930A*x* systems. These examples illustrate the design flexibility provided by the configuration options, especially for the PSEN# and RD# signals. Many designs are possible. The examples employ the 80930AD and 83930AE but also apply to the other 8X930A*x* devices if the differences in on-chip memory are allowed for. For a general discussion on external memory see "Configuring the External Memory Interface" on page 4-7. Figure 4-5 on page 4-8 and Figure 4-6 on page 4-9 depict the mapping of internal memory space into external memory.

15.8.1 Example 1: RD1:0 = 00, 18-bit Bus, External Flash and RAM

In this example, an 80930AD operates in page mode with an 18-bit external address bus interfaced to 128 Kbytes of external flash memory and 128 Kbytes of external RAM (Figure 15-17). Figure 15-18 shows how the external flash and RAM are addressed in the internal memory space. On-chip data RAM (1056 bytes) occupies the lowest addresses in region 00:.

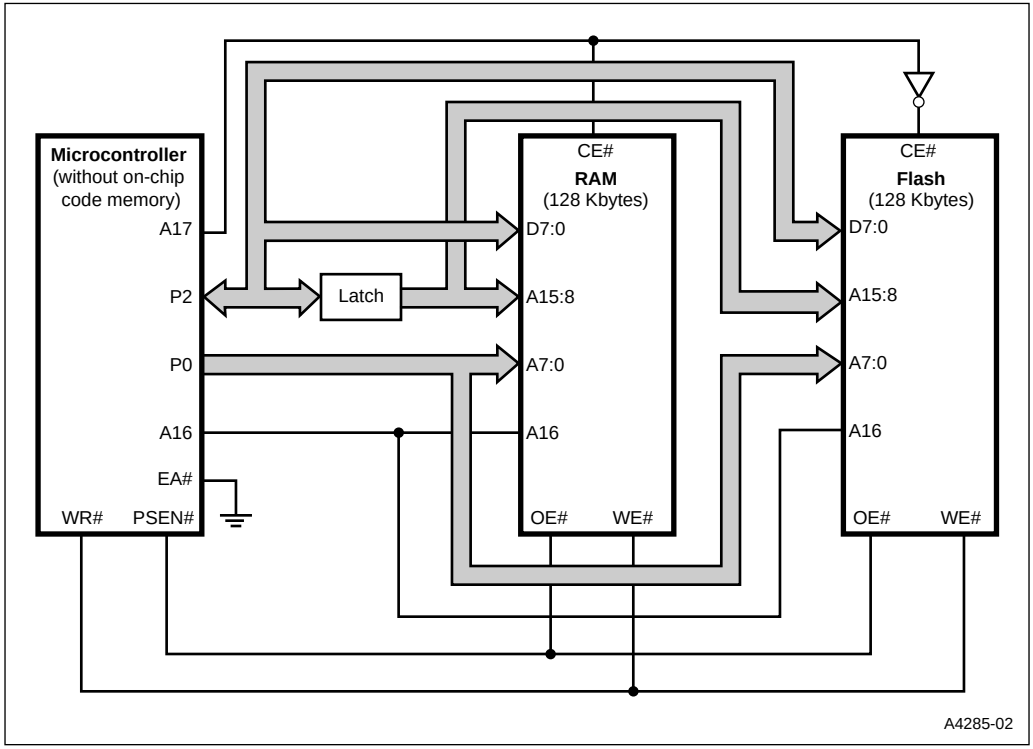

Figure 15-17. Bus Diagram for Example 1: 80930AD in Page Mode

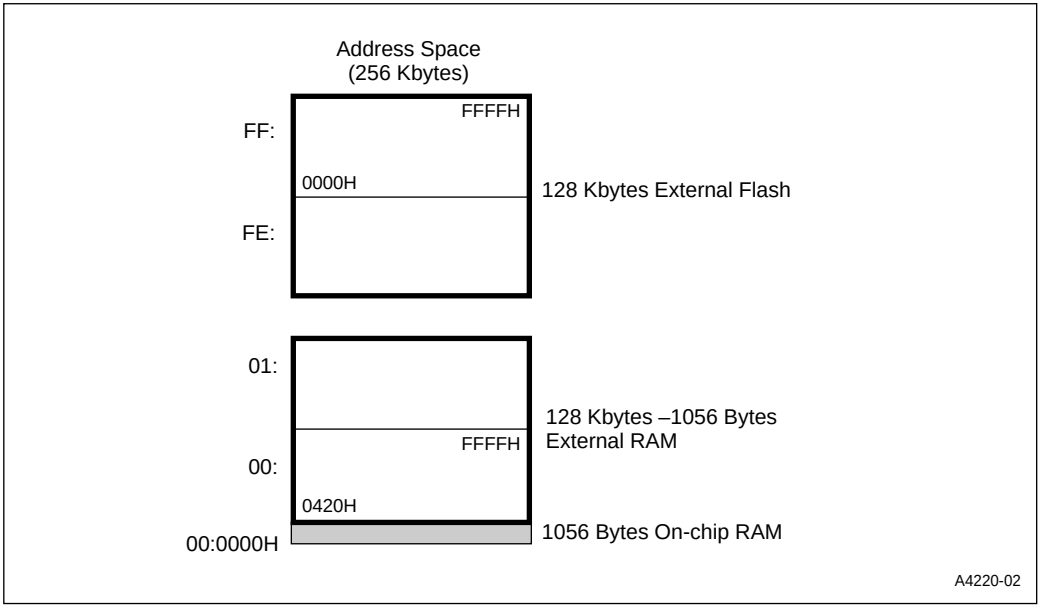

Figure 15-18. Address Space for Example 1

15.8.2 Example 2: RD1:0 = 01, 17-bit Bus, External Flash and RAM

In this example, an 80930AD operates in page mode with a 17-bit external address bus interfaced to 64 Kbytes of flash memory for code storage and 32 Kbytes of external RAM (Figure 15-19). The 80930AD is configured so that PSEN# is asserted for all reads, and RD# functions as A16 (RD1:0 = 01). Figure 15-20 shows how the external flash and RAM are addressed in the internal memory space. Addresses 0420H–7FFFH in external RAM are addressed in region 00:. On-chip data RAM (1056 bytes) occupies the lowest addresses in region 00:.

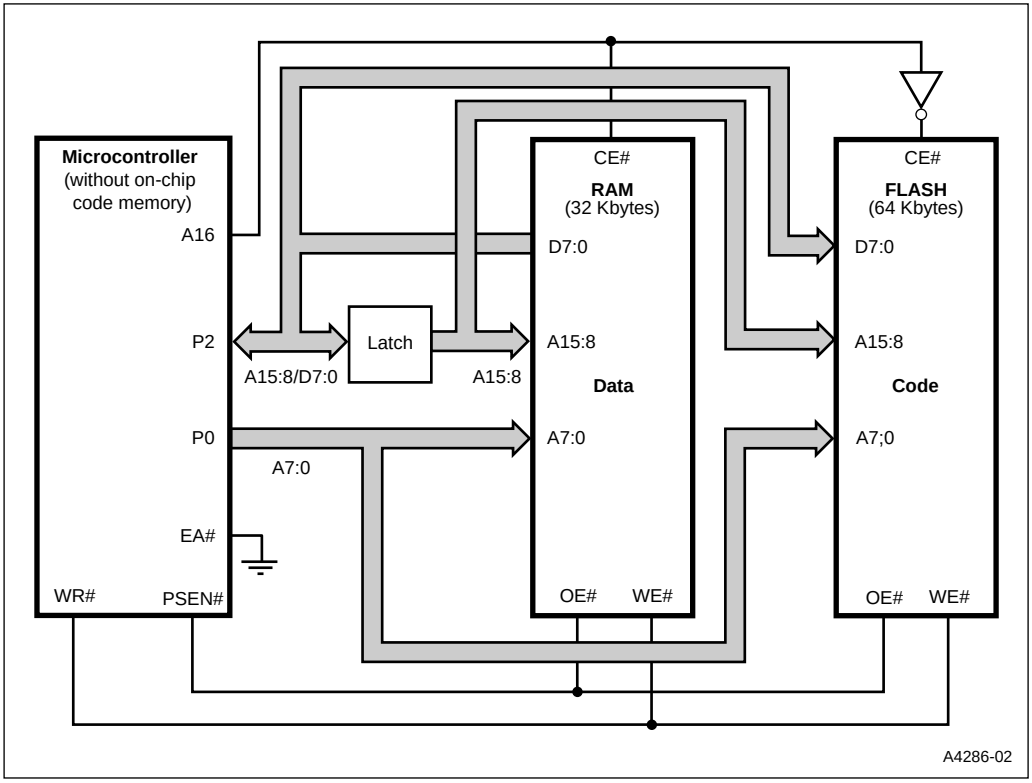

Figure 15-19. Bus Diagram for Example 2: 80930AD in Page Mode

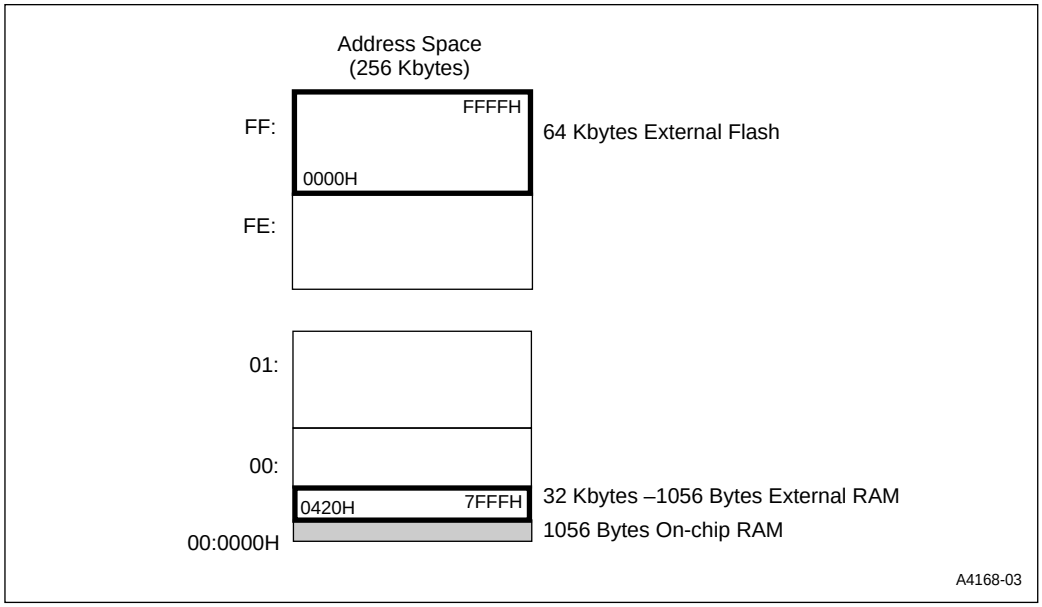

Figure 15-20. Address Space for Example 2

15.8.3 Example 3: RD1:0 = 01, 17-bit Bus, External RAM

In this example, an 83930AE operates in nonpage mode with a 17-bit external address bus interfaced to 128 Kbytes of external RAM (Figure 15-21). The 83930AE is configured so that RD# functions as A16, and PSEN# is asserted for all reads. Figure 15-22 shows how the external RAM is addressed in the internal memory space.

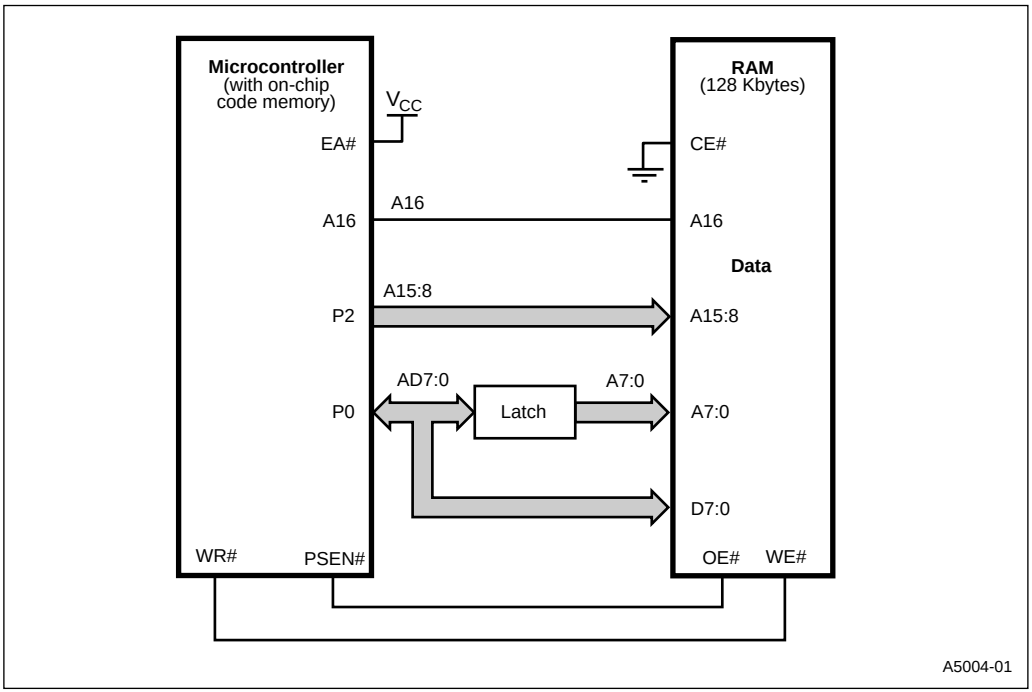

Figure 15-21. Bus Diagram for Example 3: 83930AE in Nonpage Mode

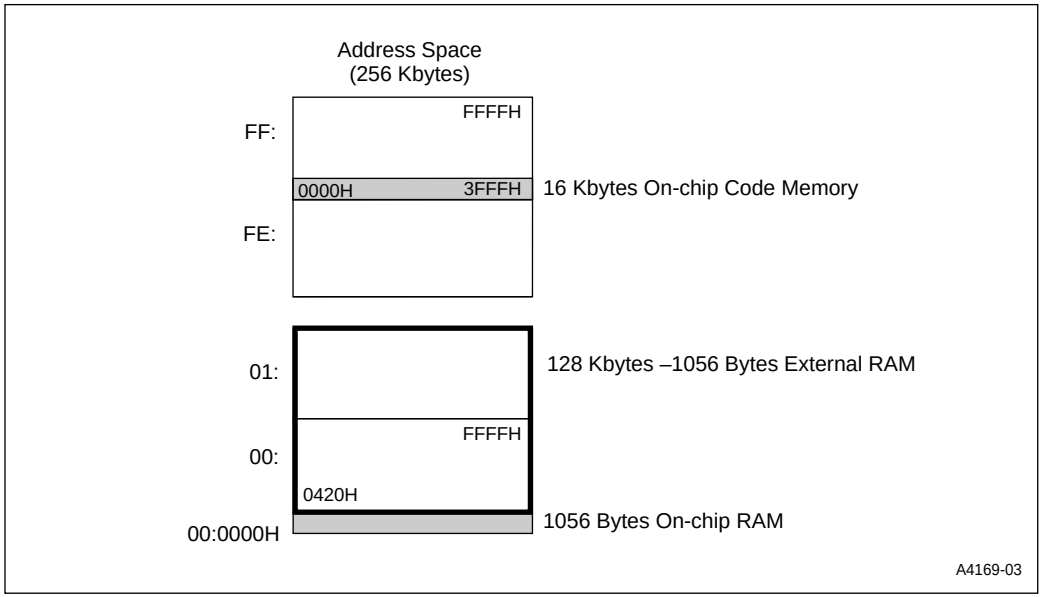

Figure 15-22. Memory Space for Example 3

15.8.4 Example 4: RD1:0 = 10, 16-bit Bus, External RAM

In this example, an 83930AE operates in nonpage mode with a 16-bit external address bus interfaced to 64 Kbytes of RAM (Figure 15-23). This configuration leaves P3.7/RD#/A16 available for general I/O (RD1:0 = 10). A maximum of 64 Kbytes of external memory can be used and all regions of internal memory map into the single 64-Kbyte region in external memory (see Figure 4-6 on page 4-9). Figure 15-24 shows how the external RAM is addressed in the internal memory space. User code is stored in on-chip ROM.

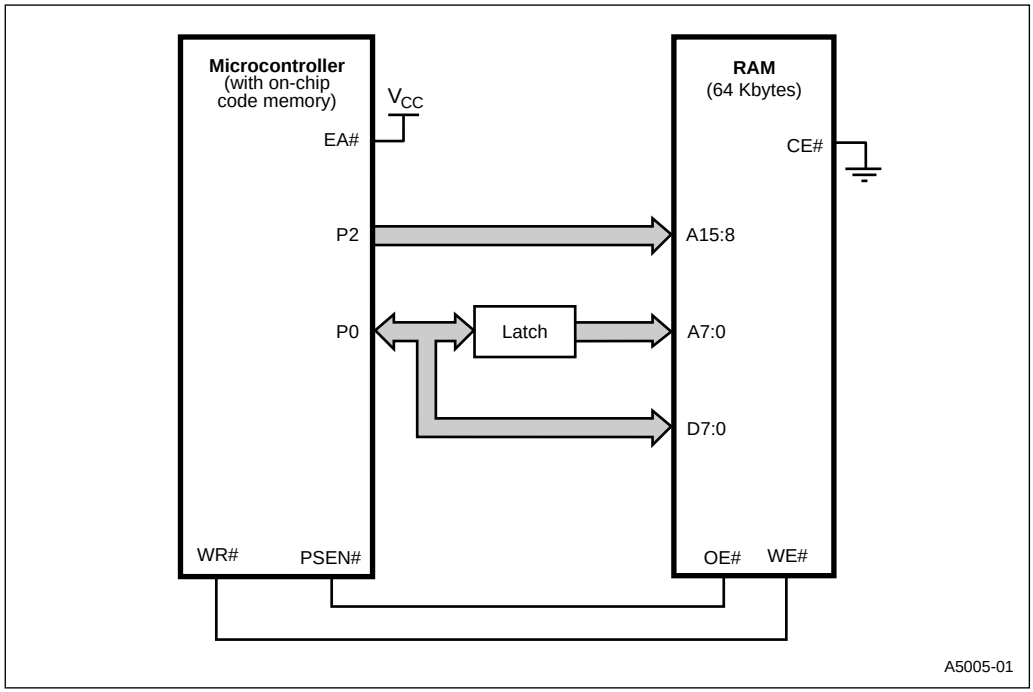

Figure 15-23. Bus Diagram for Example 4: 83930AE in Nonpage Mode

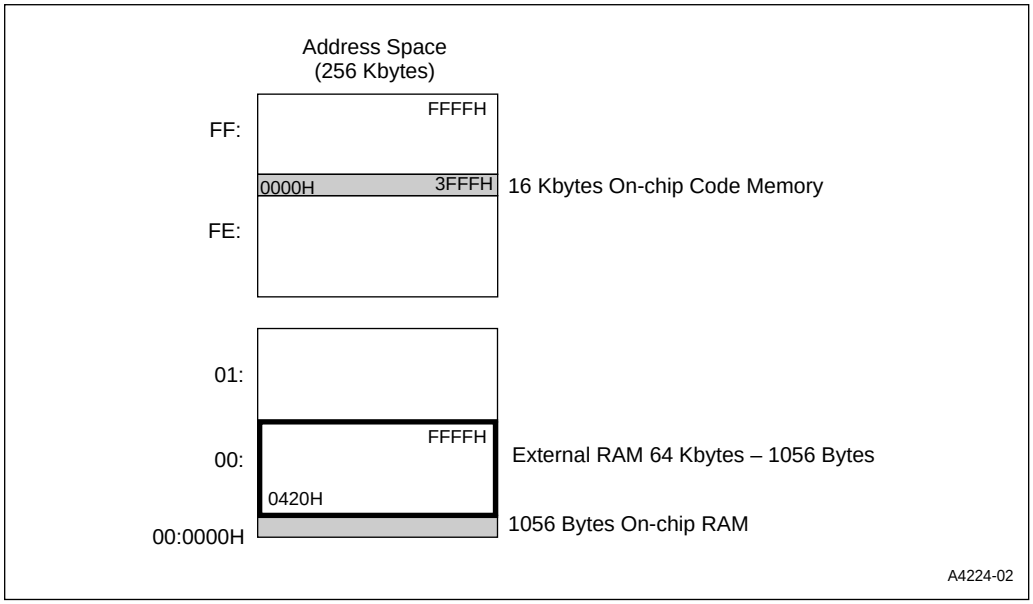

Figure 15-24. Address Space for Example 4

15.8.5 Example 5: RD1:0 = 11, 16-bit Bus, External EPROM and RAM

In this example, an 80930AD operates in nonpage mode with a 16-bit external address bus interfaced to 64 Kbytes of EPROM and 64 Kbytes of RAM (Figure 15-25). The 80930AD is configured so that RD# is asserted for addresses ≤ 7F:FFFFH and PSEN# is asserted for addresses ≥ 80:0000H. Figure 15-26 shows two ways to address the external memory in the internal memory space.

Addressing external RAM locations in either region 00: or region 01: produces the same address at the external bus pins. However, if the external EPROM and the external RAM require different numbers of wait states, the external RAM must be addressed entirely in region 01:. Recall that the number of wait states for region 01: is independent of the remaining regions and always have the same number of wait states (see Table 4-3 on page 4-11) unless the real-time wait states are selected (see Figure 15-11 on page 15-11).

The examples that follow illustrate two possibilities for addressing the external RAM.

15.8.5.1 An Application Requiring Fast Access to the Stack

If an application requires fast access to the stack, the stack can reside in the fast on-chip data RAM (00:0020H–00:041FH) and, when necessary, roll out into the slower external RAM. See the left side of Figure 15-26. In this case, the external RAM can have wait states only if the EPROM has wait states. Otherwise, if the stack rolls out above location 00:041FH, the external RAM would be accessed with no wait state.

15.8.5.2 An Application Requiring Fast Access to Data

If fast access to a block of data is more important than fast access to the stack, the data can be stored in the on-chip data RAM, and the stack can be located entirely in external memory. If the external RAM requires a different number of wait states than the EPROM, address the external RAM entirely in region 01:. See the right side of Figure 15-26. Addresses above 00:041FH roll out to external memory beginning at 0420H.

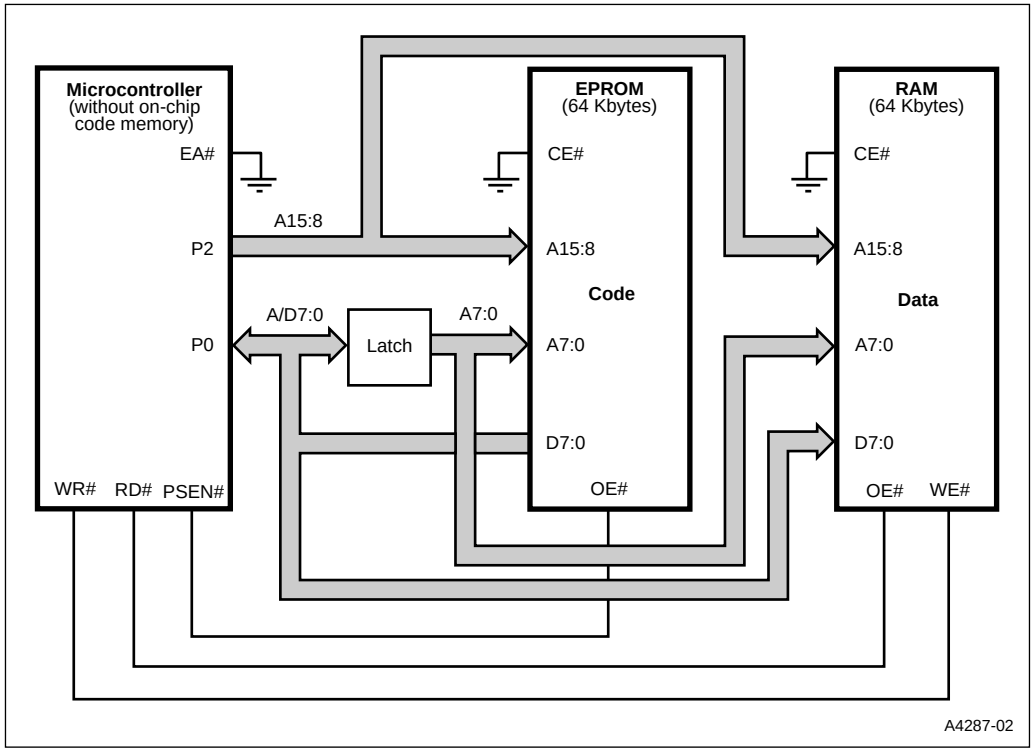

Figure 15-25. Bus Diagram for Example 5: 80930AD in Nonpage Mode

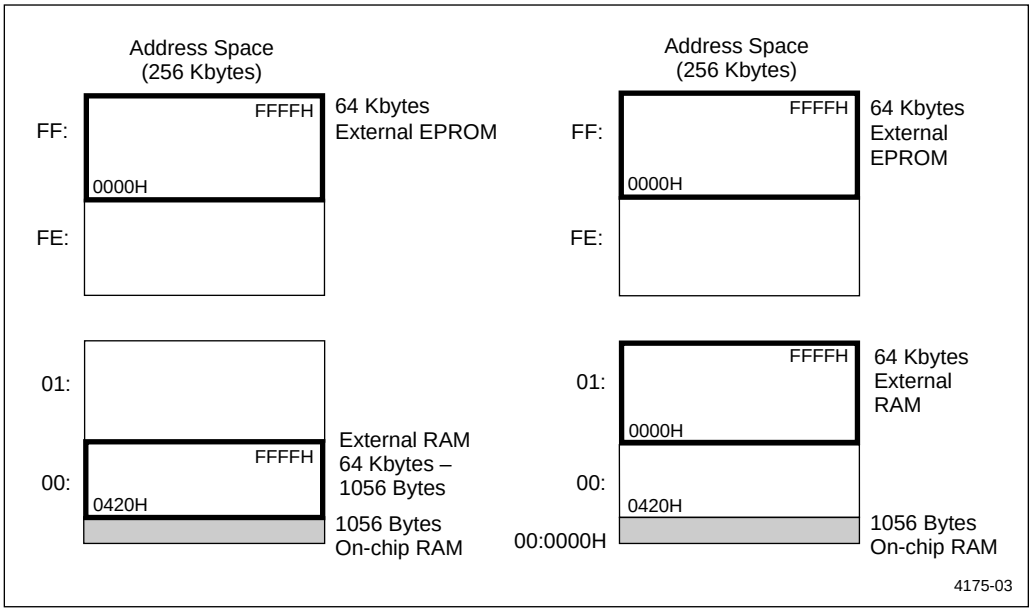

Figure 15-26. Address Space for Examples 5 and 6

15.8.6 Example 6: RD1:0 = 11, 16-bit Bus, External EPROM and RAM

In this example, an 80930AD operates in page mode with a 16-bit external address bus interfaced to 64 Kbytes of EPROM and 64 Kbytes of RAM (Figure 15-27). The 80930AD is configured so that RD# is asserted for addresses ≤ 7F:FFFFH, and PSEN# is asserted for addresses ≥ 80:0000.

This system is the same as Example 5 (Figure 15-25) except that it operates in page mode. Accordingly, the two systems have the same memory map (Figure 15-26), and the comments on addressing external RAM apply here also.

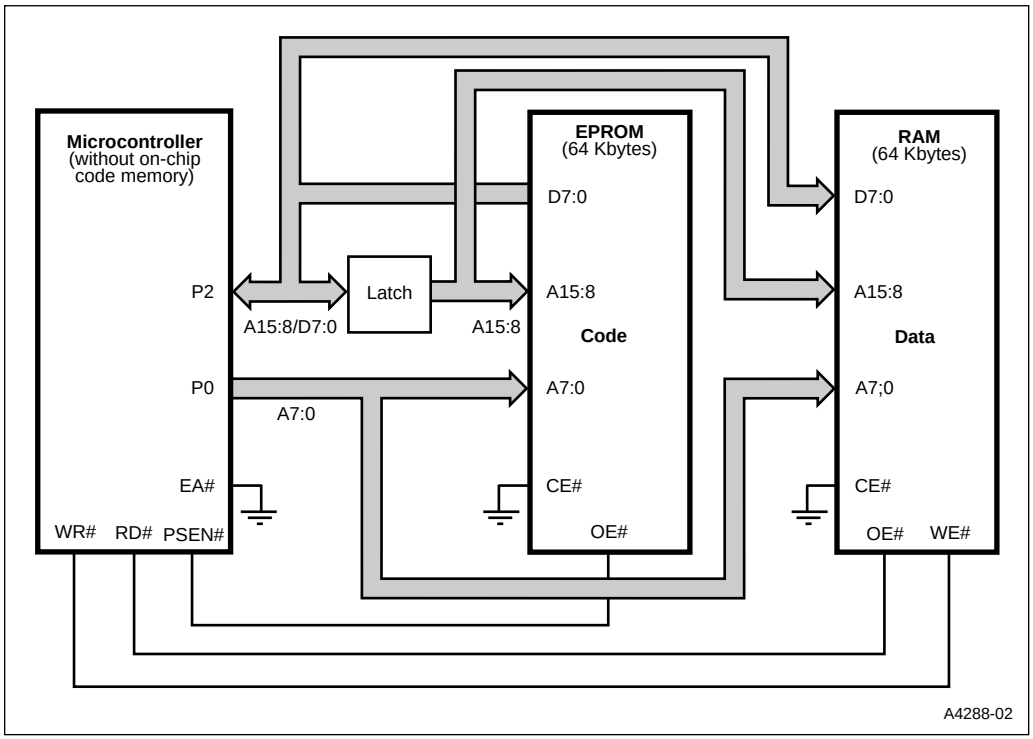

Figure 15-27. Bus Diagram for Example 6: 80930AD in Page Mode

15.8.7 Example 7: RD1:0 = 01, 17-bit Bus, External Flash

In this example, an 80930AD operates in page mode with a 17-bit external address bus interfaced to 128 Kbytes of flash memory (Figure 15-28). Port 2 carries both the upper address bits (A15:0) and the data (D7:0), while port 0 carries only the lower address bits (A7:0). The 80930AD is configured for a single read signal (PSEN#). The 128 Kbytes of external flash are accessed via internal memory regions FE: and FF: in the internal memory space.

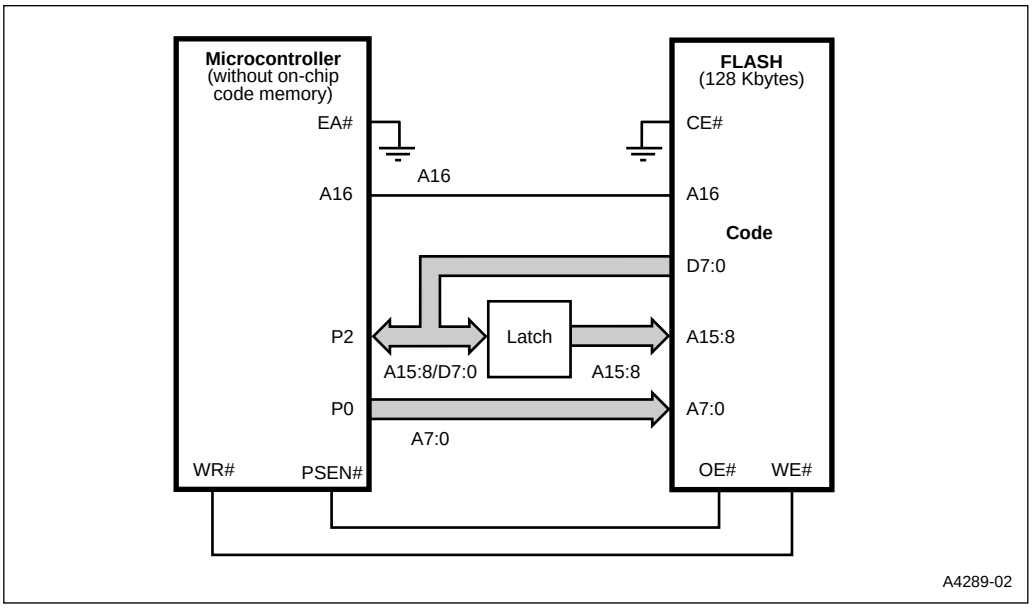

Figure 15-28. Bus Diagram for Example 7: 80930AD in Page Mode

16

Verifying Nonvolatile Memory

CHAPTER 16
VERIFYING NONVOLATILE MEMORY

This chapter provides instructions for verifying on-chip nonvolatile memory on the 8X930A*x*. The verify instructions permit reading memory locations to verify their contents. Features covered in this chapter are:

- verifying the on-chip program code memory (8 Kbytes, 16 Kbytes)
- verifying the on-chip configuration bytes (8 bytes)
- verifying the lock bits (3 bits)
- using the encryption array (128 bytes)
- verifying the signature bytes (3 bytes)

16.1 GENERAL

The 8X930A*x* is verified in the same manner as the 87C51FX and 87C251Sx microcontrollers. Verify operations differ from normal operation. Memory accesses are made one byte at a time, input/output port assignments are different, and ALE, EA#, and PSEN# are held high or low externally. See Tables 16-1 and 16-2 for lead usage during verify operations. For a complete list of device signal descriptions, see Appendix B.

In some applications, it is desirable that program code be secure from unauthorized access. The 8X930A*x* offers two types of protection for program code stored in the on-chip array:

- Program code in the on-chip code memory area is encrypted when read out for verification if the encryption array is programmed.
- A three-level lock bit system restricts external access to the on-chip program code memory.

16.1.1 Considerations for On-chip Program Code Memory

On-chip, nonvolatile code memory is located at the lower end of the FF: region. (Example: for devices with 16 Kbytes of ROM, code memory is located at FF:0000H-FF:3FFFH.) The first instruction following device reset is fetched from FF:0000H. It is recommended that user program code start at address FF:0100H. Use a jump instruction to FF:0100H to begin execution of the program. For information on address spaces, see Chapter 3, “Memory Partitions.”

Addresses outside the range of on-chip code memory access external memory. With EA# = 1 and both on-chip and external code memory implemented, you can place program code at the highest on-chip memory addresses. When the highest on-chip address is exceeded during execution, program code fetches automatically rollover from on-chip memory to external memory. See the dual note on page 3-8.

The top eight bytes of the memory address space (FF:FFF8H–FF:FFFFH) are reserved for device configuration. Do not read or write program code at these locations. For EA# = 1, the reset routine obtains configuration information from a configuration array located these addresses. (For

EA# = 0, the reset routine obtains configuration information from a configuration array in external memory using these internal addresses.) For a detailed discussion of device configuration, see Chapter 4.

With EA# = 1 and only on-chip program code memory, multi-byte instructions and instructions that result in call returns or prefetches should be located a few bytes below the maximum address to avoid inadvertently exceeding the top address. Use an EJMP instruction, five or more addresses below the top of memory, to continue execution in other areas of memory. See the dual note on page 3-8

CAUTION

Execution of program code located in the top few bytes of the on-chip memory may cause prefetches from the next higher addresses (i.e. external memory). External memory fetches make use of port 0 and port 3 and may disrupt program execution if the program uses port 0 or port 3 for a different purpose.

Table 16-1. Signal Descriptions

Signal Name	Type	Description	Alternate Function
P0.7:0	I/O	**Port 0**. Eight-bit, open-drain, bidirectional I/O port. For verify operations, use to specify the verify mode. See Table 16-2 and Figures 16-1 and 16-2.	AD7:0
P1.0 P1.1 P1.2 P1.5:3 P1.6 P1.7	I/O	**Port 1**. Eight-bit, bidirectional I/O port with internal pullups. For verify operations, use for high byte of address. See Table 16-2 and Figures 16-1 and 16-2.	T2 T2EX ECI CEX2:0 CEX3/WAIT# CEX4/A17\WCLK
P2.7:0	I/O	**Port 2**. Eight-bit, bidirectional I/O port with internal pullups. For verify operations, use as the data port. See Table 16-2 and Figures 16-1 and 16-2.	A15:8
P3.0 P3.1 P3.3:2 P3.5:4 P3.6 P3.7	I/O	**Port 3**. Eight-bit, bidirectional I/O port with internal pullups. For verify operations, use for low byte of address. See Table 16-2 and Figures 16-1 and 16-2.	RXD TXD INT1:0# T1:0 WR# RD#/A16
ALE	—	**Address Latch Enable.** For verify operations, connect this pin to V_{CC}	—
EA#	—	**External Enable.** For verify operations, connect this pin to V_{CC}	—
PSEN#	—	**Program Store Enable**. For verify operations, connect this pin to V_{SS}	—

.

16.2 VERIFY MODES

Table 16-2 lists the verify modes and provides details about the setup. The value applied to port 0 determines the mode. The upper digit specifies verify and the lower digit selects the memory function to verify (e.g., on-chip program code memory, configuration bytes, etc.). The addresses applied to port 1 and port 3 address locations in the selected memory function. The encryption array, lock bits, and signature bytes reside in nonvolatile memory outside the memory address space. Configuration bytes, UCONFIG0 and UCONFIG1, reside in nonvolatile memory at top of the memory address space (Figure 4-1 on page 4-2) for devices with on-chip ROM, and in external memory as shown in (Figure 4-2 on page 4-3) for devices without on-chip ROM.

16.3 GENERAL SETUP

Figure 16-1 shows the general setup for verifying nonvolatile memory on the 8X930A*x*. The controller must be running with an oscillator frequency of 4 MHz to 6 MHz. Set up the controller as shown in Table 16-2 with the mode of operation specified on port 0 and the address with respect to the starting address of the memory area applied to ports 1 and 3. Data appears on port 2. Connect RST, ALE, and EA# to V_{CC} and PSEN# to ground.

Figure 16-2 shows the bus cycle waveforms for the verify operations. Timing symbols are defined in Table 16-5 on page 16-6.

Table 16-2. Verify Modes

Mode	RST	PSEN#	EA#	ALE	Port 0	Port 2	Address Port 1 (high) Port 3 (low)	Notes
Verify Mode. On-chip program code Memory	High	Low	5 V	High	28H	data	0000H-3FFFH	1
Verify Mode. Configuration Bytes (UCONFIG0, UCONFIG1)	High	Low	5 V	High	29H	data	FFF8H-FFFFH	1
Verify Mode. Lock bits	High	Low	5 V	High	2BH	data	0000H	2
Verify Mode. Signature Bytes	High	Low	5 V	High	29H	data	0030H, 0031H, 0060H, 0061H	

NOTES:
1. For these modes, the internal address is FF:*xxxx*H.
2. The three lock bits are verified in a single operation. The states of the lock bits appear simultaneously at port 2 as follows: LB3 - P2.3, LB2 - P2.2. LB1 - P2.1. High = programmed.

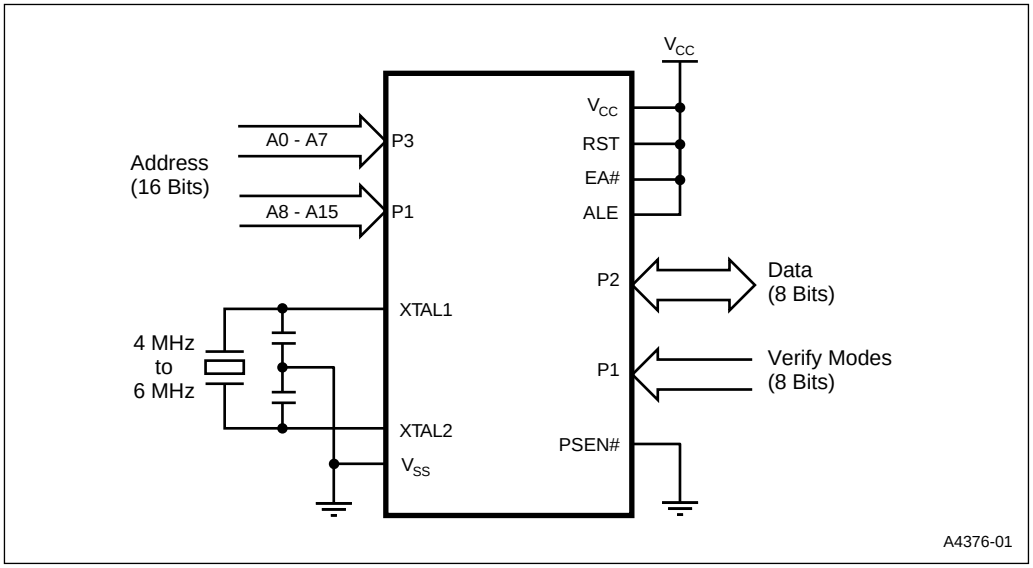

Figure 16-1. Setup for Verifying Nonvolatile Memory

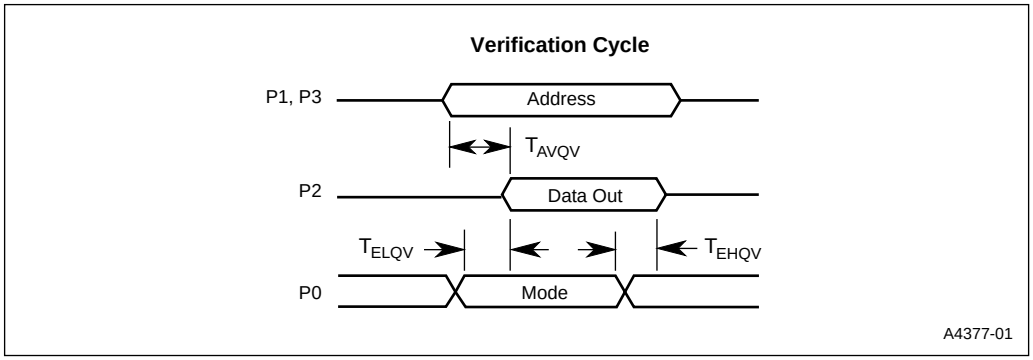

Figure 16-2. Verify Bus Cycles

16.4 VERIFY ALGORITHM

Use this procedure to verify program code, signature bytes, configuration bytes, and lock bits stored in nonvolatile memory on the 8X930A*x*. To preserve the secrecy of the encryption key byte sequence, the encryption array cannot be verified. Verification can be performed on a block of bytes. The procedure for verifying the 8X930A*x* is as follows:

1. Set up the microcontroller for operation in the appropriate mode according to Table 16-2.
2. Input the 16-bit address on ports P1 and P3.

3. Wait for the data on port P2 to become valid (T_{AVQV} = 48 clock cycles, Figure 16-5), then compare the data with the expected value.
4. Repeat steps 1 through 3 until all memory locations are verified.

16.5 LOCK BIT SYSTEM

The 8X930A*x* provides a three-level lock system for protecting program code stored in the on-chip program code memory from unauthorized access. To verify that the lock bits are correctly programmed, perform the procedure described in "Verify Algorithm" on page 16-4 using the verify lock bits mode (Table 16-2).

Table 16-3. Lock Bit Function

	Lock Bits Programmed			Protection Type
	LB3	LB2	LB1	
Level 1	U	U	U	No program lock features are enabled. On-chip program code is encrypted when verified, if encryption array is programmed.
Level 2	U	U	P	External program code is prevented from fetching program code bytes from on-chip code memory.
Level 3	U	P	P	Same as level 2, plus on-chip program code memory verify is disabled.
Level 4	P	P	P	Same as level 3, plus external memory execution is disabled.

NOTE: Other combinations of the lock bits are not defined.

16.5.1 Encryption Array

The 8X930A*x* includes a 128-byte encryption array located in nonvolatile memory outside the memory address space. During verification of the on-chip program code memory, the seven low-order address bits also address the encryption array. As the byte of the program code memory is read, it is exclusive-NORed (XNOR) with the key byte from the encryption array. If the encryption array is not programmed (still all 1s), the program code is placed on the data bus in its original, unencrypted form. If the encryption array is programmed with key bytes, the program code is encrypted and can not be used without knowledge of the key byte sequence.

CAUTION

If the encryption feature is implemented, the portion of the on-chip program code memory that does not contain program code should be filled with "random" byte values other than FFH to prevent the encryption key sequence from being revealed.

To preserve the secrecy of the encryption key byte sequence, the encryption array can not be verified.

16.6 SIGNATURE BYTES

The 8X930A*x* contains factory-programmed signature bytes. These bytes are located in nonvolatile memory outside the memory address space at 30H, 31H, 60H, and 61H. To read the signature bytes, perform the procedure described in "Verify Algorithm" on page 16-4 using the verify signature mode (Table 16-2). Signature byte values are listed in Table 16-4.

Table 16-4. Contents of the Signature Bytes

ADDRESS	CONTENTS	DEVICE TYPE
30H	89H	Indicates Intel Devices
31H	41H	Indicates USB core product
60H	7BH	Indicates 8X930A*x* device

Table 16-5. Timing Definitions

Symbol	Definition
$1/T_{CLCL}$	Oscillator Frequency
T_{AVQV}	Address to Data Valid
T_{EHQZ}	Data Float after ENABLE
T_{ELQV}	ENABLE Low to Data Valid

NOTE: A = Address, E = Enable, H = High, L = Low, Q = Data out, V = Valid, Z = Floating

A

Instruction Set Reference

APPENDIX A
INSTRUCTION SET REFERENCE

This appendix contains reference material for the 8X930A*x* instruction set, which is identical to instruction set for the MCS® 251 architecture. The appendix includes an opcode map, a detailed description of each instruction, and the following tables that summarize notation, addressing, instructions types, instruction lengths and execution times:

- Tables A-1 through A-4 describe the notation used for the instruction operands. Table A-5 describes the notation used for control instruction destinations.
- Table A-6 and Table A-7 on page A-5 comprise the opcode map for the instruction set.
- Table A-8 on page A-6 through Table A-17 on page A-10 contain supporting material for the opcode map.
- Table A-18 on page A-12 lists execution times for a group of instructions that access the port SFRs.
- The following tables list the instructions giving length (in bytes) and execution time:

  Add and Subtract Instructions, Table A-19 on page A-14

  Compare Instructions, Table A-20 on page A-15

  Increment and Decrement Instructions, Table A-21 on page A-15

  Multiply, Divide, and Decimal-adjust Instructions, Table A-22 on page A-16

  Logical Instructions, Table A-23 on page A-17

  Move Instructions, Table A-24 on page A-19

  Exchange, Push, and Pop Instructions, Table A-25 on page A-22

  Bit Instructions, Table A-26 on page A-23

  Control Instructions, Table A-27 on page A-24

"Instruction Descriptions" on page A-26 contains a detailed description of each instruction.

NOTE

The instruction execution times given in this appendix are for an internal BASE_TIME using data that is read from and written to on-chip RAM. These times do not include your application's system bus performance time necessary to fetch and execute code from external memory, accessing peripheral SFRs, using wait states, or extending the ALE pulse.

For some instructions, accessing the port SFRs, P*x*, *x* = 0–3, increases the execution time beyond that of the BASE_TIME. These cases are listed in Table A-18 and are noted in the instruction summary tables and the instruction descriptions.

A.1 NOTATION FOR INSTRUCTION OPERANDS

Table A-1. Notation for Register Operands

Register Notation		8X930A*x*	MCS 51 Arch.
@Ri	A memory location (00H–FFH) addressed indirectly via byte register R0 or R1		✔
Rn n r r r	Byte register R0–R7 of the currently selected register bank Byte register index: n = 0–7 Binary representation of n		✔
Rm Rmd Rms m, md, ms s s s s S S S S	Byte register R0–R15 of the currently selected register file Destination register Source register Byte register index: m, md, ms = 0–15 Binary representation of m or md Binary representation of ms	✔	
WRj WRjd WRjs @WRj @WRj +dis16 j, jd, js t t t t T T T T	Word register WR0, WR2, ..., WR30 of the currently selected register file Destination register Source register A memory location (00:0000H–00:FFFFH) addressed indirectly through word register WR0–WR30 Data RAM location (00:0000H–00:FFFFH) addressed indirectly through a word register (WR0–WR30) + displacement value, where the displacement value is from 0 to 64 Kbytes. Word register index: j, jd, js = 0–30 Binary representation of j or jd Binary representation of js	✔	
DRk DRkd DRks @DRk @DRk +dis24 k, kd, ks u u u u U U U U	Dword register DR0, DR4, ..., DR28, DR56, DR60 of the currently selected register file Destination Register Source Register A memory location (00:0000H–FF:FFFFH) addressed Indirectly through dword register DR0–DR28, DR56, DR60 Data RAM location (00:0000H–FF:FFFFH) addressed indirectly through a dword register (DR0–DR28, DR56, DR60) + displacement value, where the displacement value is from 0 to 64 Kbytes Dword register index: k, kd, ks = 0, 4, 8, ..., 28, 56, 60 Binary representation of k or kd Binary representation of ks	✔	

Table A-2. Notation for Direct Addresses

Direct Address.	Description	8X930A*x* Arch.	MCS 51 Arch.
dir8	An 8-bit direct address. This can be a memory address (00:0000H–00:007FH) or an SFR address (S:00H - S:FFH).	✔	✔
dir16	A 16-bit memory address (00:0000H–00:FFFFH) used in direct addressing.	✔	

Table A-3. Notation for Immediate Addressing

Immediate Data	Description	8X930A*x* Arch.	MCS 51 Arch.
#data	An 8-bit constant that is immediately addressed in an instruction.	✔	✔
#data16	A 16-bit constant that is immediately addressed in an instruction.	✔	
#0data16 #1data16	A 32-bit constant that is immediately addressed in an instruction. The upper word is filled with zeros (#0data16) or ones (#1data16).	✔	
#short v v	A constant, equal to 1, 2, or 4, that is immediately addressed in an instruction. Binary representation of #short.	✔	

Table A-4. Notation for Bit Addressing

Bit Address	Description	8X930A*x* Arch.	MCS 51 Arch.
bit y y y	A directly addressed bit in memory locations 00:0020H–00:007FH or in any defined SFR. A binary representation of the bit number (0–7) within a byte.	✔	
bit51	A directly addressed bit (bit number = 00H–FFH) in memory or an SFR. Bits 00H–7FH are the 128 bits in byte locations 20H–2FH in the on-chip RAM. Bits 80H–FFH are the 128 bits in the 16 SFR's with addresses that end in 0H or 8H: S:80H, S:88H, S:90H, . . . , S:F0H, S:F8H.		✔

Table A-5. Notation for Destinations in Control Instructions

Destination Address	Description	8X930A*x* Arch.	MCS 51 Arch.
rel	A signed (two's complement) 8-bit relative address. The destination is -128 to +127 bytes relative to first byte of the next instruction.	✔	✔
addr11	An 11-bit destination address. The destination is in the same 2-Kbyte block of memory as the first byte of the next instruction.	✔	✔
addr16	A 16-bit destination address. A destination can be anywhere within the same 64-Kbyte region as the first byte of the next instruction.	✔	✔
addr24	A 24-bit destination address. A destination can be anywhere within the 16-Mbyte address space.	✔	

A.2 OPCODE MAP AND SUPPORTING TABLES

Table A-6. Instructions for MCS® 51 Microcontrollers

Bin.	0	1	2	3	4	5	6-7	8-F
Src.	**0**	**1**	**2**	**3**	**4**	**5**	**A5*x*6–A5*x*7**	**A5*x*8–A5*x*F**
0	NOP	AJMP addr11	LJMP addr16	RR A	INC A	INC dir8	INC @Ri	INC Rn
1	JBC bit,rel	ACALL addr11	LCALL addr16	RRC A	DEC A	DEC dir8	DEC @Ri	DEC Rn
2	JB bit,rel	AJMP addr11	RET	RLA	ADD A,#data	ADD A,dir8	ADD A,@Ri	ADD A,Rn
3	JNB bit,rel	ACALL addr11	RETI	RLCA	ADDC A,#data	ADDC A,dir8	ADDC A,@Ri	ADDC A,Rn
4	JC rel	AJMP addr11	ORL dir8,A	ORL dir8,#data	ORL A,#data	ORL A,dir8	ORL A,@Ri	ORL A,Rn
5	JNC rel	ACALL addr11	ANL dir8,A	ANL dir8,#data	ANL A,#data	ANL A,dir8	ANL A,@Ri	ANL A,Rn
6	JZ rel	AJMP addr11	XRL dir8,A	XRL dir8,#data	XRL A,#data	XRL A,dir8	XRL A,@Ri	XRL A,Rn
7	JNZ rel	ACALL addr11	ORL CY,bit	JMP @A+DPTR	MOV A,#data	MOV dir8,#data	MOV @Ri,#data	MOV Rn,#data
8	SJMP rel	AJMP addr11	ANL CY,bit	MOVC A,@A+PC	DIV AB	MOV dir8,dir8	MOV dir8,@Ri	MOV dir8,Rn
9	MOV DPTR,#data16	ACALL addr11	MOV bit,CY	MOVC A,@A+DPTR	SUBB A,#data	SUBB A,dir8	SUBB A,@Ri	SUBB A,Rn
A	ORL CY,bit	AJMP addr11	MOV CY,bit	INC DPTR	MUL AB	ESC	MOV @Ri,dir8	MOV Rn,dir8
B	ANL CY,bit	ACALL addr11	CPL bit	CPL CY	CJNE A,#data,rel	CJNE A,dir8,rel	CJNE @Ri,#data,rel	CJNE Rn,#data,rel
C	PUSH dir8	AJMP addr11	CLR bit	CLR CY	SWAP A	XCH A,dir8	XCH A,@Ri	XCH A,Rn
D	POP dir8	ACALL addr11	SETB bit	SETB CY	DA A	DJNZ dir8,rel	XCHD A,@Ri	DJNZ Rn,rel
E	MOVX A,@DPTR	AJMP addr11	MOVX A,@Ri		CLR A	MOV A,dir8	MOV A,@Ri	MOV A,Rn
F	MOV @DPTR,A	ACALL addr11	MOVX @Ri,A		CPL A	MOV dir8,A	MOV @Ri,A	MOV Rn,A

Table A-7. Instructions for the 8X930A*x* Architecture

Bin.	A5*x*8	A5*x*9	A5*x*A	A5*x*B	A5*x*C	A5*x*D	A5*x*E	A5*x*F
Src.	***x*8**	***x*9**	***x*A**	***x*B**	***x*C**	***x*D**	***x*E**	***x*F**
0	JSLE rel	MOV Rm,@WRj+dis	MOVZ WRj,Rm	INC R,#short (1) MOV reg,ind			SRA reg	
1	JSG rel	MOV @WRj+dis,Rm	MOVS WRj,Rm	DEC R,#short (1) MOV ind,reg			SRL reg	
2	JLE rel	MOV Rm,@DRk+dis			ADD Rm,Rm	ADD WRj,WRj	ADD reg,op2 (2)	ADD DRk,DRk
3	JG rel	MOV @DRk+dis,Rm					SLL reg	
4	JSL rel	MOV WRj,@WRj+dis			ORL Rm,Rm	ORL WRj,WRj	ORL reg,op2 (2)	
5	JSGE rel	MOV @WRj+dis,WRj			ANL Rm,Rm	ANL WRj,WRj	ANL reg,op2 (2)	
6	JE rel	MOV WRj,@DRk+dis			XRL Rm,Rm	XRL WRj,WRj	XRL reg,op2 (2)	
7	JNE rel	MOV @DRk+dis,WRj	MOV op1,reg (2)		MOV Rm,Rm	MOV WRj,WRj	MOV reg,op2 (2)	MOV DRk,DRk
8		LJMP @WRj EJMP @DRk	EJMP addr24		DIV Rm,Rm	DIV WRj,WRj		
9		LCALL@WRj ECALL @DRk	ECALL addr24		SUB Rm,Rm	SUB WRj,WRj	SUB reg,op2 (2)	SUB DRk,DRk
A		Bit Instructions (3)	ERET		MUL Rm,Rm	MUL WRj,WRj		
B		TRAP			CMP Rm,Rm	CMP WRj,WRj	CMP reg,op2 (2)	CMP DRk,DRk
C			PUSH op1 (4) MOV DRk,PC					
D			POP op1 (4)					
E								
F								

NOTES:
1. R = Rm/WRj/DRk.
2. op1, op2 are defined in Table A-8.
3. See Tables A-10 and A-11.
4. See Table A-12.

Table A-8. Data Instructions

Instruction	Byte 0		Byte 1		Byte 2		Byte 3
Oper Rmd,Rms	x	C	md	ms			
Oper WRjd,WRjs	x	D	jd/2	js/2			
Oper DRkd,DRks	x	F	kd/4	ks/4			
Oper Rm,#data	x	E	m	0000	#data		
Oper WRj,#data16	x	E	j/2	0100	#data (high)		#data (low)
Oper DRk,#data16	x	E	k/4	1000	#data (high)		#data (low)

MOV DRk(h),#data16
MOV DRk,#1data16
CMP DRk,#1data16
	7
	7
	B
		A
		E
		E
			k/4	1100	#data (high)		#data (low)

Oper Rm,dir8	x	E	m	0001	dir8 addr		
Oper WRj,dir8	x	E	j/2	0101	dir8 addr		
Oper DRk,dir8	x	E	k/4	1101	dir8 addr		
Oper Rm,dir16	x	E	m	0011	dir16 addr (high)		dir16 addr (low)
Oper WRj,dir16	x	E	j/2	0111	dir16 addr (high)		dir16 addr (low)
Oper DRk,dir16 (1)	x	E	k/4	1111	dir16 addr (high)		dir16 addr (low)
Oper Rm,@WRj	x	E	j/2	1001	m	00	
Oper Rm,@DRk	x	E	k/4	1011	m	00	

NOTE:
1. For this instruction, the only valid operation is MOV.

Table A-9. High Nibble, Byte 0 of Data Instructions

x	Operation	Notes
2	ADD reg,op2	All addressing modes are supported.
9	SUB reg,op2	
B	CMP reg,op2 (1)	
4	ORL reg,op2 (2)	
5	ANL reg,op2 (2)	
6	XRL reg,op2 (2)	
7	MOV reg,op2	
8	DIV reg,op2	Two modes only: reg,op2 = Rmd,Rms reg,op2 = Wjd,Wjs
A	MUL reg,op2	

NOTES:
1. The CMP operation does not support DRk, direct16.
2. For the ORL, ANL, and XRL operations, neither reg nor op2 can be DRk.

All of the bit instructions in the 8X930A*x* architecture (Table A-7) have opcode A9, which serves as an escape byte (similar to A5). The high nibble of byte 1 specifies the bit instruction, as given in Table A-10.

Table A-10. Bit Instructions

	Instruction	Byte 0(*x*)		Byte 1			Byte 2	Byte 3
1	Bit Instr (dir8)	A	9	*xxxx*	0	bit	dir8 addr	rel addr

Table A-11. Byte 1 (High Nibble) for Bit Instructions

xxxx	Bit Instruction
0001	JBC bit
0010	JB bit
0011	JNB bit
0111	ORL CY,bit
1000	ANL CY,bit
1001	MOV bit,CY
1010	MOV CY,bit
1011	CPL bit
1100	CLR bit
1101	SETB bit
1110	ORL CY, /bit
1111	ANL CY, /bit

Table A-12. PUSH/POP Instructions

Instruction	Byte 0(x)		Byte 1		Byte 2	Byte 3
PUSH #data	C	A	0000	0010	#data	
PUSH #data16	C	A	0000	0110	#data16 (high)	#data16 (low)
PUSH Rm	C	A	m	1000		
PUSH WRj	C	A	j/2	1001		
PUSH DRk	C	A	k/4	1011		
MOV DRk,PC	C	A	k/4	0001		
POP Rm	D	A	m	1000		
POP WRj	D	A	j/2	1001		
POP DRk	D	A	k/4	1011		

Table A-13. Control Instructions

Instruction	Byte 0(*x*)		Byte 1		Byte 2	Byte 3
EJMP addr24	8	A	addr[23:16]		addr[15:8]	addr[7:0]
ECALL addr24	9	A	addr[23:16]		addr[15:8]	addr[7:0]
LJMP @WRj	8	9	j/2	0100		
LCALL @WRj	9	9	j/2	0100		
EJMP @DRk	8	9	k/4	1000		
ECALL @DRk	9	9	k/4	1000		
ERET	A	A				
JE rel	8	8	rel			
JNE rel	7	8	rel			
JLE rel	2	8	rel			
JG rel	3	8	rel			
JSL rel	4	8	rel			
JSGE rel	5	8	rel			
JSLE rel	0	8	rel			
JSG rel	1	8	rel			
TRAP	B	9				

Table A-14. Displacement/Extended MOVs

Instruction	Byte 0		Byte 1		Byte 2		Byte 3
MOV Rm,@WRj+dis	0	9	m	j/2	dis[15:8]		dis[7:0]
MOV WRk,@WRj+dis	4	9	j/2	k2	dis[15:8]		dis[7:0]
MOV Rm,@DRk+dis	2	9	m	k/4	dis[15:8]		dis[7:0]
MOV WRj,@DRk+dis	6	9	j/2	k/4	dis[15:8]		dis[7:0]
MOV @WRj+dis,Rm	1	9	m	j/2	dis[15:8]		dis[7:0]
MOV @WRj+dis,WRk	5	9	j/2	k2	dis[15:8]		dis[7:0]
MOV @DRk+dis,Rm	3	9	m	k/4	dis[15:8]		dis[7:0]
MOV @DRk+dis,WRj	7	9	j/2	k/4	dis[15:8]		dis[7:0]
MOVS WRj,Rm	1	A	j/2	m			
MOVZ WRj,Rm	0	A	j/2	m			
MOV WRj,@WRj	0	B	j/2	1000	j/2	0000	
MOV WRj,@DRk	0	B	k/4	1010	j/2	0000	
MOV @WRj,WRj	1	B	j/2	1000	j/2	0000	
MOV @DRk,WRj	1	B	k/4	1010	j/2	0000	
MOV dir8,Rm	7	A	m	0001	dir8 addr		
MOV dir8,WRj	7	A	j/2	0101	dir8 addr		
MOV dir8,DRk	7	A	k/4	1101	dir8 addr		
MOV dir16,Rm	7	A	m	0011	dir16 addr (high)		dir16 addr (low)
MOV dir16,WRj	7	A	j/2	0111	dir16 addr (high)		dir16 addr (low)
MOV dir16,DRk	7	A	k/4	1111	dir16 addr (high)		dir16 addr (low)
MOV @WRj,Rm	7	A	j/2	1001	m	0000	
MOV @DRk,Rm	7	A	k/4	1011	m	0000	

Table A-15. INC/DEC

	Instruction	Byte 0		Byte 1		
1	INC Rm,#short	0	B	m	00	ss
2	INC WRj,#short	0	B	j/2	01	ss
3	INC DRk,#short	0	B	k/4	11	ss
4	DEC Rm,#short	1	B	m	00	ss
5	DEC WRj,#short	1	B	j/2	01	ss
6	DEC DRk,#short	1	B	k/4	11	ss

Table A-16. Encoding for INC/DEC

ss	#short
00	1
01	2
10	4

Table A-17. Shifts

	Instruction	Byte 0		Byte 1	
1	SRA Rm	0	E	m	0000
2	SRA WRj	0	E	j/2	0100
3	SRL Rm	1	E	m	0000
4	SRL WRj	1	E	j/2	0100
5	SLL Rm	3	E	m	0000
6	SLL WRj	3	E	j/2	0100

A.3 INSTRUCTION SET SUMMARY

This section contains tables that summarize the instruction set. For each instruction there is a short description, its length in bytes, and its execution time in states.

NOTE

Execution times are increased by executing code from external memory, accessing peripheral SFRs, accessing data in external memory, using a wait state, or extending the ALE pulse.

For some instructions, accessing the port SFRs, P*x*, *x* = 0–3, increases the execution time. These cases are noted individually in the tables.

A.3.1 Execution Times for Instructions Accessing the Port SFRs

Table A-18 lists these instructions and the execution times.

- Case 1. Code executes from external memory with no wait state and a short ALE (not extended) and accesses a port SFR.
- Case 2. Code executes from external memory with one wait state and a short ALE (not extended) and accesses a port SFR.
- Case 3. Code executes from external memory with one wait state and an extended ALE, and accesses a port SFR.

Times for each case are expressed as the number of state times to be added to the BASE_TIME.

Table A-18. State Times to Access the Port SFRs

Instruction	BASE_TIME		Additional State Times (Add to the BASE_TIME column)		
	Binary	Source	Case 1	Case 2	Case 3
ADD A,dir8	1	1	2	3	4
ADD Rm,dir8	3	2	2	3	4
ADDC A,dir8	1	1	2	3	4
ANL A,dir8	1	1	2	3	4
ANL CY,bit	3	2	2	3	4
ANL CY,bit51	1	1	2	3	4
ANL CY,/bit	3	2	2	3	4
ANL CY,/bit51	1	1	2	3	4
ANL dir8,#data	3	3	4	6	8
ANL dir8,A	2	2	4	6	8
ANL Rm,dir8	3	2	2	3	4
CLR bit	4	3	4	6	8
CLR bit51	2	2	4	6	8
CMP Rm,dir8	3	2	2	3	4
CPL bit	4	3	4	6	8
CPL bit51	2	2	4	6	8
DEC dir8	2	2	4	6	8
INC dir8	2	2	4	6	8
MOV A,dir8	1	1	2	3	4
MOV bit,CY	4	3	4	6	8
MOV bit51,CY	2	2	4	6	8
MOV CY,bit	3	2	2	3	4
MOV CY,bit51	1	1	2	3	4
MOV dir8,#data	3	3	2	3	4
MOV dir8,A	2	2	2	3	4
MOV dir8,Rm	4	3	2	3	4
MOV dir8,Rn	2	3	2	3	4
MOV Rm,dir8	3	2	2	3	4
MOV Rn,dir8	1	2	2	3	4
ORL A,dir8	1	1	2	3	4
ORL CY,bit	3	2	2	3	4
ORL CY,bit51	1	1	2	3	4
ORL CY,/bit	3	2	2	3	4

Table A-18. State Times to Access the Port SFRs (Continued)

Instruction	BASE_TIME		Additional State Times (Add to the BASE_TIME column)		
	Binary	Source	Case 1	Case 2	Case 3
ORL CY,/bit51	1	1	2	3	4
ORL dir8,#data	3	3	2	3	4
ORL dir8,A	2	2	4	6	8
ORL Rm,dir8	3	2	2	3	4
SETB bit	4	3	4	6	8
SETB bit51	2	2	4	6	8
SUB Rm,dir8	3	2	2	3	4
SUBB A,dir8	1	1	2	3	4
XCH A,dir8	3	3	4	6	8
XRL A,dir8	1	1	2	3	4
XRL dir8,#data	3	3	4	6	8
XRL dir8,A	2	2	4	6	8
XRL Rm,dir8	3	2	2	3	4

A.3.2 Instruction Summaries

Table A-19. Summary of Add and Subtract Instructions

Add	**ADD <dest>,<src>**	**dest opnd ← dest opnd + src opnd**
Subtract	**SUB <dest>,<src>**	**dest opnd ← dest opnd - src opnd**
Add with Carry	**ADDC <dest>,<src>**	**(A) ← (A) + src opnd + carry bit**
Subtract with Borrow	**SUBB <dest>,<src>**	**(A) ← (A) - src opnd - carry bit**

Mnemonic	<dest>,<src>	Notes	Binary Mode		Source Mode	
			Bytes	States	Bytes	States
ADD	A,Rn	Reg to acc	1	1	2	2
	A,dir8	Dir byte to acc	2	1 (2)	2	1 (2)
	A,@Ri	Indir addr to acc	1	2	2	3
	A,#data	Immediate data to acc	2	1	2	1
ADD; SUB	Rmd,Rms	Byte reg to/from byte reg	3	2	2	1
	WRjd,WRjs	Word reg to/from word reg	3	3	2	2
	DRkd,DRks	Dword reg to/from dword reg	3	5	2	4
	Rm,#data	Immediate 8-bit data to/from byte reg	4	3	3	2
	WRj,#data16	Immediate 16-bit data to/from word reg	5	4	4	3
	DRk,#0data16	16-bit unsigned immediate data to/from dword reg	5	6	4	5
	Rm,dir8	Dir addr to/from byte reg	4	3 (2)	3	2 (2)
	WRj,dir8	Dir addr to/from word reg	4	4	3	3
	Rm,dir16	Dir addr (64K) to/from byte reg	5	3	4	2
	WRj,dir16	Dir addr (64K) to/from word reg	5	4	4	3
	Rm,@WRj	Indir addr (64K) to/from byte reg	4	3	3	2
	Rm,@DRk	Indir addr (16M) to/from byte reg	4	4	3	3
ADDC; SUBB	A,Rn	Reg to/from acc with carry	1	1	2	2
	A,dir8	Dir byte to/from acc with carry	2	1 (2)	2	1 (2)
	A,@Ri	Indir RAM to/from acc with carry	1	2	2	3
	A,#data	Immediate data to/from acc with carry	2	1	2	1

NOTES:
1. A shaded cell denotes an instruction in the MCS® 51 architecture.
2. If this instruction addresses an I/O port (P*x*, *x* = 3:0), add 1 to the number of states.

Table A-20. Summary of Compare Instructions

Compare	CMP <dest>,<src>	dest opnd – src opnd				
Mnemonic	**<dest>,<src>**	**Notes**	**Binary Mode**		**Source Mode**	
			Bytes	**States**	**Bytes**	**States**
CMP	Rmd,Rms	Reg with reg	3	2	2	1
	WRjd,WRjs	Word reg with word reg	3	3	2	2
	DRkd,DRks	Dword reg with dword reg	3	5	2	4
	Rm,#data	Reg with immediate data	4	3	3	2
	WRj,#data16	Word reg with immediate 16-bit data	5	4	4	3
	DRk,#0data16	Dword reg with zero-extended 16-bit immediate data	5	6	4	5
	DRk,#1data16	Dword reg with one-extended 16-bit immediate data	5	6	4	5
	Rm,dir8	Dir addr from byte reg	4	3†	3	2†
	WRj,dir8	Dir addr from word reg	4	4	3	3
	Rm,dir16	Dir addr (64K) from byte reg	5	3	4	2
	WRj,dir16	Dir addr (64K) from word reg	5	4	4	3
	Rm,@WRj	Indir addr (64K) from byte reg	4	3	3	2
	Rm,@DRk	Indir addr (16M) from byte reg	4	4	3	3

† If this instruction addresses an I/O port (P*x*, *x* = 3:0), add 1 to the number of states.

Table A-21. Summary of Increment and Decrement Instructions

Increment	**INC DPTR**	**(DPTR) ← (DPTR) + 1**
Increment	**INC byte**	**byte ← byte + 1**
Increment	**INC <dest>,<src>**	**dest opnd ← dest opnd + src opnd**
Decrement	**DEC byte**	**byte ← byte – 1**
Decrement	**DEC <dest>,<src>**	**dest opnd ← dest opnd - src opnd**

Mnemonic	**<dest>,<src>**	**Notes**	**Binary Mode**		**Source Mode**	
			Bytes	**States**	**Bytes**	**States**
INC; DEC	A	acc	1	1	1	1
	Rn	Reg	1	1	2	2
	dir8	Dir byte	2	2 (2)	2	2 (2)
	@Ri	Indir RAM	1	3	2	4
	Rm,#short	Byte reg by 1, 2, or 4	3	2	2	1
	WRj,#short	Word reg by 1, 2, or 4	3	2	2	1
	DRk,#short	Double word reg by 1, 2, or 4	3	4	2	3

NOTES:
1. A shaded cell denotes an instruction in the MCS® 51 architecture.
2. If this instruction addresses an I/O port (P*x*, *x* = 0–3), add 2 to the number of states.

Table A-21. Summary of Increment and Decrement Instructions

Increment	**INC DPTR**	**(DPTR) ← (DPTR) + 1**
Increment	**INC byte**	**byte ← byte + 1**
Increment	**INC <dest>,<src>**	**dest opnd ← dest opnd + src opnd**
Decrement	**DEC byte**	**byte ← byte – 1**
Decrement	**DEC <dest>,<src>**	**dest opnd ← dest opnd - src opnd**

Mnemonic	<dest>,<src>	Notes	Binary Mode		Source Mode	
			Bytes	States	Bytes	States
INC	DPTR	Data pointer	1	1	1	1

NOTES:
1. A shaded cell denotes an instruction in the MCS® 51 architecture.
2. If this instruction addresses an I/O port (P*x*, *x* = 0–3), add 2 to the number of states.

Table A-22. Summary of Multiply, Divide, and Decimal-adjust Instructions

Multiply	**MUL <reg1,reg2>**	**(2)**
	MUL AB	**(B:A) = A x B**
Divide	**DIV <reg1>,<reg2>**	**(2)**
	DIV AB	**(A) = Quotient; (B) =Remainder**
Decimal-adjust ACC for Addition (BCD)	**DA A**	**(2)**

Mnemonic	<dest>,<src>	Notes	Binary Mode		Source Mode	
			Bytes	States	Bytes	States
MUL	AB	Multiply A and B	1	5	1	5
	Rmd,Rms	Multiply byte reg and byte reg	3	6	2	5
	WRjd,WRjs	Multiply word reg and word reg	3	12	2	11
DIV	AB	Divide A by B	1	10	1	10
	Rmd,Rms	Divide byte reg by byte reg	3	11	2	10
	WRjd,WRjs	Divide word reg by word reg	3	21	2	20
DA	A	Decimal adjust acc	1	1	1	1

NOTES:
1. A shaded cell denotes an instruction in the MCS® 51 architecture.
2. See "Instruction Descriptions" on page A-26.

Table A-23. Summary of Logical Instructions

Logical AND	**ANL <dest>,<src>**	**dest opnd ←dest opnd Λ src opnd**
Logical OR	**ORL <dest>,<src>**	**dest opnd ← dest opnd V src opnd**
Logical Exclusive OR	**XRL <dest>,<src>**	**dest opnd ← dest opnd ∀ src opnd**
Clear	**CLR A**	**(A) ← 0**
Complement	**CPL A**	**(Ai) ← Ø(Ai)**
Rotate	**RXX A**	**(1)**
Shift	**SXX Rm or Wj**	**(1)**
SWAP	**A**	**A3:0 ↔ A7:4**

Mnemonic	**<dest>,<src>**	**Notes**	**Binary Mode**		**Source Mode**	
			Bytes	**States**	**Bytes**	**States**
ANL; ORL; XRL;	A,Rn	Reg to acc	1	1	2	2
	A,dir8	Dir byte to acc	2	1 (3)	2	1 (3)
	A,@Ri	Indir addr to acc	1	2	2	3
	A,#data	Immediate data to acc	2	1	2	1
	dir8,A	Acc to dir byte	2	2 (4)	2	2 (4)
	dir8,#data	Immediate data to dir byte	3	3 (4)	3	3 (4)
	Rmd,Rms	Byte reg to byte reg	3	2	2	1
	WRjd,WRjs	Word reg to word reg	3	3	2	2
	Rm,#data	8-bit data to byte reg	4	3	3	2
	WRj,#data16	16-bit data to word reg	5	4	4	3
	Rm,dir8	Dir addr to byte reg	4	3 (3)	3	2 (3)
	WRj,dir8	Dir addr to word reg	4	4	3	3
	Rm,dir16	Dir addr (64K) to byte reg	5	3	4	2
	WRj,dir16	Dir addr (64K) to word reg	5	4	4	3
	Rm,@WRj	Indir addr (64K) to byte reg	4	3	3	2
	Rm,@DRk	Indir addr (16M) to byte reg	4	4	3	3
CLR	A	Clear acc	1	1	1	1
CPL	A	Complement acc	1	1	1	1
RL	A	Rotate acc left	1	1	1	1
RLC	A	Rotate acc left through the carry	1	1	1	1
RR	A	Rotate acc right	1	1	1	1
RRC	A	Rotate acc right through the carry	1	1	1	1
SLL	Rm	Shift byte reg left	3	2	2	1
	WRj	Shift word reg left	3	2	2	1

NOTES:
1. See “Instruction Descriptions” on page A-26.
2. A shaded cell denotes an instruction in the MCS® 51 architecture.
3. If this instruction addresses an I/O port (P*x*, *x* = 0–3), add 1 to the number of states.
4. If this instruction addresses an I/O port (P*x*, *x* = 0–3), add 2 to the number of states.

Table A-23. Summary of Logical Instructions (Continued)

Logical AND	**ANL <dest>,<src>**	**dest opnd ←dest opnd Λ src opnd**
Logical OR	**ORL <dest>,<src>**	**dest opnd ← dest opnd V src opnd**
Logical Exclusive OR	**XRL <dest>,<src>**	**dest opnd ← dest opnd ∀ src opnd**
Clear	**CLR A**	**(A) ← 0**
Complement	**CPL A**	**(Ai) ← Ø(Ai)**
Rotate	**RXX A**	**(1)**
Shift	**SXX Rm or Wj**	**(1)**
SWAP	**A**	**A3:0 ↔ A7:4**

Mnemonic	**<dest>,<src>**	**Notes**	**Binary Mode**		**Source Mode**	
			Bytes	**States**	**Bytes**	**States**
SRA	Rm	Shift byte reg right through the MSB	3	2	2	1
	WRj	Shift word reg right through the MSB	3	2	2	1
SRL	Rm	Shift byte reg right	3	2	2	1
	WRj	Shift word reg right	3	2	2	1
SWAP	A	Swap nibbles within the acc	1	2	1	2

NOTES:
1. See "Instruction Descriptions" on page A-26.
2. A shaded cell denotes an instruction in the MCS® 51 architecture.
3. If this instruction addresses an I/O port (P*x*, *x* = 0–3), add 1 to the number of states.
4. If this instruction addresses an I/O port (P*x*, *x* = 0–3), add 2 to the number of states.

Table A-24. Summary of Move Instructions

Move (2)	**MOV <dest>,<src>**	**destination ← src opnd**
Move with Sign Extension	**MOVS <dest>,<src>**	**destination ← src opnd with sign extend**
Move with Zero Extension	**MOVZ <dest>,<src>**	**destination ← src opnd with zero extend**
Move Code Byte	**MOVC <dest>,<src>**	**A ← code byte**
Move to External Mem	**MOVX <dest>,<src>**	**external mem ← (A)**
Move from External Mem	**MOVX <dest>,<src>**	**A ← source opnd in external mem**

Mnemonic	<dest>,<src>	Notes	Binary Mode		Source Mode	
			Bytes	States	Bytes	States
MOV	A,Rn	Reg to acc	1	1	2	2
	A,dir8	Dir byte to acc	2	1 (3)	2	1 (3)
	A,@Ri	Indir RAM to acc	1	2	2	3
	A,#data	Immediate data to acc	2	1	2	1
	Rn,A	Acc to reg	1	1	2	2
	Rn,dir8	Dir byte to reg	2	1 (3)	3	2 (3)
	Rn,#data	Immediate data to reg	2	1	3	2
	dir8,A	Acc to dir byte	2	2 (3)	2	2 (3)
	dir8,Rn	Reg to dir byte	2	2 (3)	3	3 (3)
	dir8,dir8	Dir byte to dir byte	3	3	3	3
	dir8,@Ri	Indir RAM to dir byte	2	3	3	4
	dir8,#data	Immediate data to dir byte	3	3 (3)	3	3 (3)
	@Ri,A	Acc to indir RAM	1	3	2	4
	@Ri,dir8	Dir byte to indir RAM	2	3	3	4
	@Ri,#data	Immediate data to indir RAM	2	3	3	4
	DPTR,#data16	Load Data Pointer with a 16-bit const	3	2	3	2
	Rmd,Rms	Byte reg to byte reg	3	2	2	1
	WRjd,WRjs	Word reg to word reg	3	2	2	1
	DRkd,DRks	Dword reg to dword reg	3	3	2	2
	Rm,#data	8-bit immediate data to byte reg	4	3	3	2
	WRj,#data16	16-bit immediate data to word reg	5	3	4	2
	DRk,#0data16	zero-extended 16-bit immediate data to dword reg	5	5	4	4
	DRk,#1data16	one-extended 16-bit immediate data to dword reg	5	5	4	4

NOTES:
1. A shaded cell denotes an instruction in the MCS® 51 architecture.
2. Instructions that move bits are in Table A-26.
3. If this instruction addresses an I/O port (P*x*, *x* = 0–3), add 1 to the number of states.
4. External memory addressed by instructions in the MCS 51 architecture is in the region specified by DPXL (reset value = 01H). See “Compatibility with the MCS® 51 Architecture” on page 3-2.

Table A-24. Summary of Move Instructions (Continued)

Move (2)	**MOV <dest>,<src>**	**destination ← src opnd**
Move with Sign Extension	**MOVS <dest>,<src>**	**destination ← src opnd with sign extend**
Move with Zero Extension	**MOVZ <dest>,<src>**	**destination ← src opnd with zero extend**
Move Code Byte	**MOVC <dest>,<src>**	**A ← code byte**
Move to External Mem	**MOVX <dest>,<src>**	**external mem ← (A)**
Move from External Mem	**MOVX <dest>,<src>**	**A ← source opnd in external mem**

Mnemonic	<dest>,<src>	Notes	Binary Mode		Source Mode	
			Bytes	States	Bytes	States
MOV	DRk,dir8	Dir addr to dword reg	4	6	3	5
	DRk,dir16	Dir addr (64K) to dword reg	5	6	4	5
	Rm,dir8	Dir addr to byte reg	4	3 (3)	3	2 (3)
	WRj,dir8	Dir addr to word reg	4	4	3	3
	Rm,dir16	Dir addr (64K) to byte reg	5	3	4	2
	WRj,dir16	Dir addr (64K) to word reg	5	4	4	3
	Rm,@WRj	Indir addr (64K) to byte reg	4	2	3	2
	Rm,@DRk	Indir addr (16M) to byte reg	4	4	3	3
	WRjd,@WRjs	Indir addr(64K) to word reg	4	4	3	3
	WRj,@DRk	Indir addr(16M) to word reg	4	5	3	4
	dir8,Rm	Byte reg to dir addr	4	4 (3)	3	3 (3)
	dir8,WRj	Word reg to dir addr	4	5	3	4
	dir16,Rm	Byte reg to dir addr (64K)	5	4	4	3
	dir16,WRj	Word reg to dir addr (64K)	5	5	4	4
	@WRj,Rm	Byte reg to indir addr (64K)	4	4	3	3
	@DRk,Rm	Byte reg to indir addr (16M)	4	5	3	4
	@WRjd,WRjs	Word reg to indir addr (64K)	4	5	3	4
	@DRk,WRj	Word reg to indir addr (16M)	4	6	3	5
	dir8,DRk	Dword reg to dir addr	4	7	3	6
	dir16,DRk	Dword reg to dir addr (64K)	5	7	4	6
	Rm,@WRj+dis16	Indir addr with disp (64K) to byte reg	5	6	4	5
	WRj,@WRj+dis16	Indir addr with disp (64K) to word reg	5	7	4	6
	Rm,@DRk+dis16	Indir addr with disp (16M) to byte reg	5	7	4	6
	WRj,@DRk+dis16	Indir addr with disp (16M) to word reg	5	8	4	7
	@WRj+dis16,Rm	Byte reg to Indir addr with disp (64K)	5	6	4	5

NOTES:
1. A shaded cell denotes an instruction in the MCS® 51 architecture.
2. Instructions that move bits are in Table A-26.
3. If this instruction addresses an I/O port (P*x*, *x* = 0–3), add 1 to the number of states.
4. External memory addressed by instructions in the MCS 51 architecture is in the region specified by DPXL (reset value = 01H). See "Compatibility with the MCS® 51 Architecture" on page 3-2.

Table A-24. Summary of Move Instructions (Continued)

Move (2)	**MOV <dest>,<src>**	**destination ← src opnd**
Move with Sign Extension	**MOVS <dest>,<src>**	**destination ← src opnd with sign extend**
Move with Zero Extension	**MOVZ <dest>,<src>**	**destination ← src opnd with zero extend**
Move Code Byte	**MOVC <dest>,<src>**	**A ← code byte**
Move to External Mem	**MOVX <dest>,<src>**	**external mem ← (A)**
Move from External Mem	**MOVX <dest>,<src>**	**A ← source opnd in external mem**

Mnemonic	<dest>,<src>	Notes	Binary Mode		Source Mode	
			Bytes	States	Bytes	States
MOV	@WRj+dis16,WRj	Word reg to Indir addr with disp (64K)	5	7	4	6
	@DRk+dis16,Rm	Byte reg to Indir addr with disp (16M)	5	7	4	6
	@DRk+dis16,WRj	Word reg to Indir addr with disp (16M)	5	8	4	7
MOVH	DRk(hi), #data16	16-bit immediate data into upper word of dword reg	5	3	4	2
MOVS	WRj,Rm	Byte reg to word reg with sign extension	3	2	2	1
MOVZ	WRj,Rm	Byte reg to word reg with zeros extension	3	2	2	1
MOVC	A,@A+DPTR	Code byte relative to DPTR to acc	1	6	1	6
	A,@A+PC	Code byte relative to PC to acc	1	6	1	6
MOVX	A,@Ri	External mem (8-bit addr) to acc (4)	1	4	2	5
	A,@DPTR	External mem (16-bit addr) to acc (4)	1	5	1	5
	@Ri,A	Acc to external mem (8-bit addr) (4)	1	4	1	4
	@DPTR,A	Acc to external mem (16-bit addr) (4)	1	5	1	5

NOTES:
1. A shaded cell denotes an instruction in the MCS® 51 architecture.
2. Instructions that move bits are in Table A-26.
3. If this instruction addresses an I/O port (P*x*, *x* = 0–3), add 1 to the number of states.
4. External memory addressed by instructions in the MCS 51 architecture is in the region specified by DPXL (reset value = 01H). See “Compatibility with the MCS® 51 Architecture” on page 3-2.

Table A-25. Summary of Exchange, Push, and Pop Instructions

Exchange Contents	**XCH <dest>,<src>**	**A ↔ src opnd**
Exchange Digit	**XCHD <dest>,<src>**	**A3:0 ↔ on-chip RAM bits 3:0**
Push	**PUSH <src>**	**SP ← SP + 1; (SP) ← src**
Pop	**POP <dest>**	**dest ← (SP); SP ← SP – 1**

Mnemonic	<dest>,<src>	Notes	Binary Mode		Source Mode	
			Bytes	States	Bytes	States
XCH	A,Rn	Acc and reg	1	3	2	4
	A,dir8	Acc and dir addr	2	3 (2)	2	3 (2)
	A,@Ri	Acc and on-chip RAM (8-bit addr)	1	4	2	5
XCHD	A,@Ri	Acc and low nibble in on-chip RAM (8-bit addr)	1	4	2	5
PUSH	dir8	Push dir byte onto stack	2	2	2	2
	#data	Push immediate data onto stack	4	4	3	3
	#data16	Push 16-bit immediate data onto stack	5	5	4	5
	Rm	Push byte reg onto stack	3	4	2	3
	WRj	Push word reg onto stack	3	6	2	5
	DRk	Push double word reg onto stack	3	10	2	9
POP	Dir	Pop dir byte from stack	2	3/3	2	3/3
	Rm	Pop byte reg from stack	3	3	2	2
	WRj	Pop word reg from stack	3	5	2	4
	DRk	Pop double word reg from stack	3	9	2	8

NOTES:
1. A shaded cell denotes an instruction in the MCS® 51 architecture.
2. If this instruction addresses an I/O port (P*x*, *x* = 0–3), add 2 to the number of states.

Table A-26. Summary of Bit Instructions

Clear Bit	**CLR bit**	**bit ← 0**
Set Bit	**SETB bit**	**bit ← 1**
Complement Bit	**CPL bit**	**bit← Øbit**
AND Carry with Bit	**ANL CY,bit**	**CY ← CY Λ bit**
AND Carry with Complement of Bit	**ANL CY,/bit**	**CY ← CY Λ Øbit**
OR Carry with Bit	**ORL CY,bit**	**CY ← CY V bit**
ORL Carry with Complement of Bit	**ORL CY,/bit**	**CY ← CY V Øbit**
Move Bit to Carry	**MOV CY,bit**	**CY ← bit**
Move Bit from Carry	**MOV bit,CY**	**bit ← CY**

Mnemonic	<src>,<dest>	Notes	Binary Mode		Source Mode	
			Bytes	States	Bytes	States
CLR	CY	Clear carry	1	1	1	1
	bit51	Clear dir bit	2	2 (2)	2	2 (2)
	bit	Clear dir bit	4	4	3	3
SETB	CY	Set carry	1	1	1	1
	bit51	Set dir bit	2	2 (2)	2	2 (2)
	bit	Set dir bit	4	4 (2)	3	3 (2)
CPL	CY	Complement carry	1	1	1	1
	bit51	Complement dir bit	2	2 (2)	2	2 (2)
	bit	Complement dir bit	4	4 (2)	3	3 (2)
ANL	CY,bit51	AND dir bit to carry	2	1 (3)	2	1 (3)
	CY,bit	AND dir bit to carry	4	3 (3)	3	2 (3)
ANL/	CY,/bit51	AND complemented dir bit to carry	2	1 (3)	2	1 (3)
	CY,/bit	AND complemented dir bit to carry	4	3 (3)	3	2 (3)
ORL	CY,bit51	OR dir bit to carry	2	1 (3)	2	1 (3)
	CY,bit	OR dir bit to carry	4	3 (3)	3	2 (3)
ORL/	CY,/bit51	OR complemented dir bit to carry	2	1 (3)	2	1 (3)
	CY,/bit	OR complemented dir bit to carry	4	3 (3)	3	2 (3)
MOV	CY,bit51	Move dir bit to carry	2	1 (3)	2	1 (3)
	CY,bit	Move dir bit to carry	4	3 (3)	3	2 (3)
	bit51,CY	Move carry to dir bit	2	2 (2)	2	2 (2)
	bit,CY	Move carry to dir bit	4	4 (2)	3	3 (2)

NOTES:
1. A shaded cell denotes an instruction in the MCS® 51 architecture.
2. If this instruction addresses an I/O port (P*x*, *x* = 0–3), add 2 to the number of states.
3. If this instruction addresses an I/O port (P*x*, *x* = 0–3), add 1 to the number of states.

Table A-27. Summary of Control Instructions

Mnemonic	<dest>,<src>	Notes	Binary Mode		Source Mode	
			Bytes	States (2)	Bytes	States (2)
ACALL	addr11	Absolute subroutine call	2	9	2	9
ECALL	@DRk	Extended subroutine call, indirect	3	12	2	11
	addr24	Extended subroutine call	5	14	4	13
LCALL	@WRj	Long subroutine call, indirect	3	9	2	8
	addr16	Long subroutine call	3	9	3	9
RET		Return from subroutine	1	6	1	6
ERET		Extended subroutine return	3	10	2	9
RETI		Return from interrupt	1	6	1	6
AJMP	addr11	Absolute jump	2	3	2	3
EJMP	addr24	Extended jump	5	6	4	5
	@DRk	Extended jump, indirect	3	7	2	6
LJMP	@WRj	Long jump, indirect	3	6	2	5
	addr16	Long jump	3	4	3	4
SJMP	rel	Short jump (relative addr)	2	3	2	3
JMP	@A+DPTR	Jump indir relative to the DPTR	1	5	1	5
JC	rel	Jump if carry is set	2	1/4	2	1/4
JNC	rel	Jump if carry not set	2	1/4	2	1/4
JB	bit51,rel	Jump if dir bit is set	3	2/5	3	2/5
	bit,rel	Jump if dir bit of 8-bit addr location is set	5	4/7	4	3/6
JNB	bit51,rel	Jump if dir bit is not set	3	2/5	3	2/5
	bit,rel	Jump if dir bit of 8-bit addr location is not set	5	4/7	4	3/6
JBC	bit51,rel	Jump if dir bit is set & clear bit	3	4/7	3	4/7
	bit,rel	Jump if dir bit of 8-bit addr location is set and clear bit	5	7/10	4	6/9
JZ	rel	Jump if acc is zero	2	2/5	2	2/5
JNZ	rel	Jump if acc is not zero	2	2/5	2	2/5
JE	rel	Jump if equal	3	2/5	2	1/4
JNE	rel	Jump if not equal	3	2/5	2	1/4
JG	rel	Jump if greater than	3	2/5	2	1/4
JLE	rel	Jump if less than or equal	3	2/5	2	1/4
JSL	rel	Jump if less than (signed)	3	2/5	2	1/4

NOTES:
1. A shaded cell denotes an instruction in the MCS® 51 architecture.
2. For conditional jumps, times are given as not-taken/taken.

Table A-27. Summary of Control Instructions (Continued)

Mnemonic	<dest>,<src>	Notes	Binary Mode		Source Mode	
			Bytes	States (2)	Bytes	States (2)
JSLE	rel	Jump if less than or equal (signed)	3	2/5	2	1/4
JSG	rel	Jump if greater than (signed)	3	2/5	2	1/4
JSGE	rel	Jump if greater than or equal (signed)	3	2/5	2	1/4
CJNE	A,dir8,rel	Compare dir byte to acc and jump if not equal	3	2/5	3	2/5
	A,#data,rel	Compare immediate to acc and jump if not equal	3	2/5	3	2/5
	Rn,#data,rel	Compare immediate to reg and jump if not equal	3	2/5	4	3/6
	@Ri,#data,rel	Compare immediate to indir and jump if not equal	3	3/6	4	4/7
DJNZ	Rn,rel	Decrement reg and jump if not zero	2	2/5	3	3/6
	dir8,rel	Decrement dir byte and jump if not zero	3	3/6	3	3/6
TRAP	—	Jump to the trap interrupt vector	2	10	1	9
NOP	—	No operation	1	1	1	1

NOTES:
1. A shaded cell denotes an instruction in the MCS® 51 architecture.
2. For conditional jumps, times are given as not-taken/taken.

A.4 INSTRUCTION DESCRIPTIONS

This section describes each instruction in the 8X930A*x* architecture. See the note on page A-11 regarding execution times.

Table A-28 defines the symbols (—, ✓, 1, 0,?) used to indicate the effect of the instruction on the flags in the PSW and PSW1 registers. For a conditional jump instruction, "!" indicates that a flag influences the decision to jump.

Table A-28. Flag Symbols

Symbol	Description
—	The instruction does not modify the flag.
✓	The instruction sets or clears the flag, as appropriate.
1	The instruction sets the flag.
0	The instruction clears the flag.
?	The instruction leaves the flag in an indeterminate state.
!	For a conditional jump instruction: The state of the flag before the instruction executes influences the decision to jump or not jump.

ACALL <addr11>

Function: Absolute call

Description: Unconditionally calls a subroutine at the specified address. The instruction increments the 3-byte PC twice to obtain the address of the following instruction, then pushes bytes 0 and 1 of the result onto the stack (byte 0 first) and increments the stack pointer twice. The destination address is obtained by successively concatenating bits 15–11 of the incremented PC, opcode bits 7–5, and the second byte of the instruction. The subroutine called must therefore start within the same 2-Kbyte "page" of the program memory as the first byte of the instruction following ACALL.

Flags:

CY	AC	OV	N	Z
—	—	—	—	—

Example: The stack pointer (SP) contains 07H and the label "SUBRTN" is at program memory location 0345H. After executing the instruction

ACALL SUBRTN

at location 0123H, SP contains 09H; on-chip RAM locations 08H and 09H contain 01H and 25H, respectively; and the PC contains 0345H.

	Binary Mode	Source Mode
Bytes:	2	2
States:	9	9

[Encoding]

a10 a9 a8 1	0 0 0 1	a7 a6 a5 a4	a3 a2 a1 a0

Hex Code in: **Binary Mode = [Encoding]**
Source Mode = [Encoding]

Operation: ACALL
(PC) ← (PC) + 2
(SP) ← (SP) + 1
((SP)) ← (PC.7:0)
(SP) ← (SP) + 1
((SP)) ← (PC.15:8)
(PC.10:0) ← page address

ADD <dest>,<src>

Function: Add

Description: Adds the source operand to the destination operand, which can be a register or the accumulator, leaving the result in the register or accumulator. If there is a carry out of bit 7 (CY), the CY flag is set. If byte variables are added, and if there is a carry out of bit 3 (AC), the AC flag is set. For addition of unsigned integers, the CY flag indicates that an overflow occurred.

If there is a carry out of bit 6 but not out of bit 7, or a carry out of bit 7 but not bit 6, the OV flag is set. When adding signed integers, the OV flag indicates a negative number produced as the sum of two positive operands, or a positive sum from two negative operands.

Bit 6 and bit 7 in this description refer to the most significant byte of the operand (8, 16, or 32 bit).

Four source operand addressing modes are allowed: register, direct, register-indirect, and immediate.

Flags:

CY	AC	OV	N	Z
✓	✓	✓	✓	✓

Example: Register 1 contains 0C3H (11000011B) and register 0 contains 0AAH (10101010B). After executing the instruction

ADD R1,R0

register 1 contains 6DH (01101101B), the AC flag is clear, and the CY and OV flags are set.

Variations

ADD A,#data

	Binary Mode	Source Mode
Bytes:	2	2
States:	1	1

[Encoding]

0 0 1 0	0 1 0 0	immed. data

Hex Code in: **Binary Mode = [Encoding]**
Source Mode = [Encoding]

Operation: ADD
(A) ← (A) + #data

ADD A,dir8

	Binary Mode	Source Mode
Bytes:	2	2
States:	1†	1†

†If this instruction addresses a port (P*x*, *x* = 0–3), add 1 state.

[Encoding]

0 0 1 0	0 1 0 1	direct addr

Hex Code in: **Binary Mode = [Encoding]**
Source Mode = [Encoding]

Operation: ADD
(A) ← (A) + (dir8)

ADD A,@Ri

	Binary Mode	Source Mode
Bytes:	1	2
States:	2	3

[Encoding]

0 0 1 0	0 1 1 i

Hex Code in: **Binary Mode = [Encoding]**
Source Mode = [A5][Encoding]

Operation: ADD
(A) ← (A) + ((Ri))

ADD A,Rn

	Binary Mode	Source Mode
Bytes:	1	2
States:	1	2

[Encoding]

0 0 1 0	1 r r r

Hex Code in: **Binary Mode = [Encoding]**
Source Mode = [A5][Encoding]

Operation: ADD
(A) ← (A) + (Rn)

ADD Rmd,Rms

	Binary Mode	Source Mode
Bytes:	3	2
States:	2	1

[Encoding]	0 0 1 0	1 1 0 0	s s s s	S S S S

Hex Code in: **Binary Mode = [A5][Encoding]**
Source Mode = [Encoding]

Operation: ADD
(Rmd) ← (Rmd) + (Rms)

ADD WRjd,WRjs

	Binary Mode	Source Mode
Bytes:	3	2
States:	3	2

[Encoding]	0 0 1 0	1 1 0 1	t t t t	T T T T

Hex Code in: **Binary Mode = [A5][Encoding]**
Source Mode = [Encoding]

Operation: ADD
(WRjd) ← (WRjd) + (WRjs)

ADD DRkd,DRks

	Binary Mode	Source Mode
Bytes:	3	2
States:	5	4

[Encoding]	0 0 1 0	1 1 1 1	u u u u	U U U U

Hex Code in: **Binary Mode = [A5][Encoding]**
Source Mode = [Encoding]

Operation: ADD
(DRkd) ← (DRkd) + (DRks)

ADD Rm,#data

	Binary Mode	Source Mode
Bytes:	4	3
States:	3	2

[Encoding]	0 0 1 0	1 1 1 0	s s s s	0 0 0 0	#data

Hex Code in: **Binary Mode = [A5][Encoding]**
Source Mode = [Encoding]

Operation: ADD
(Rm) ← (Rm) + #data

ADD WRj,#data16

	Binary Mode	Source Mode
Bytes:	5	4
States:	4	3

[Encoding]

0 0 1 0	1 1 1 0	t t t t	0 1 0 0	#data hi	#data low

Hex Code in: **Binary Mode = [A5][Encoding]**
Source Mode = [Encoding]

Operation: ADD
(WRj) ← (WRj) + #data16

ADD DRk,#0data16

	Binary Mode	Source Mode
Bytes:	5	4
States:	6	5

[Encoding]

0 0 1 0	1 1 1 0	u u u u	1 0 0 0	#data hi	#data low

Hex Code in: **Binary Mode = [A5][Encoding]**
Source Mode = [Encoding]

Operation: ADD
(DRk) ← (DRk) + #data16

ADD Rm,dir8

	Binary Mode	Source Mode
Bytes:	4	3
States:	3†	2†

†If this instruction addresses a port (P*x*, *x* = 0–3), add 1 state.

[Encoding]

0 0 1 0	1 1 1 0	s s s s	0 0 0 1	direct addr

Hex Code in: **Binary Mode = [A5][Encoding]**
Source Mode = [Encoding]

Operation: ADD
(Rm**)** ← (Rm) + (dir8)

ADD WRj,dir8

	Binary Mode	Source Mode
Bytes:	4	3
States:	4	3

[Encoding]

0 0 1 0	1 1 1 0	t t t t	0 1 0 1	direct addr

Hex Code in: **Binary Mode = [A5][Encoding]**
Source Mode = [Encoding

Operation: ADD
(WRj) ← (WRj) + (dir8)

ADD Rm,dir16

	Binary Mode	Source Mode
Bytes:	5	4
States:	3	2

[Encoding]

0 0 1 0	1 1 1 0	s s s s	0 0 1 1	direct addr	direct add

Hex Code in: **Binary Mode = [A5][Encoding]**
Source Mode = [Encoding]

Operation: ADD
(Rm) ← (Rm) + (dir16)

ADD WRj,dir16

	Binary Mode	Source Mode
Bytes:	5	4
States:	4	3

[Encoding]

0 0 1 0	1 1 1 0	t t t t	0 1 1 1	direct addr	direct addr

Hex Code in: **Binary Mode = [A5][Encoding]**
Source Mode = [Encoding]

Operation: ADD
(WRj) ← (WRj) + (dir16)

ADD Rm,@WRj

	Binary Mode	Source Mode
Bytes:	4	3
States:	3	2

[Encoding]

0 0 1 0	1 1 1 0	t t t t	1 0 0 1	s s s s	0 0 0 0

Hex Code in: **Binary Mode = [A5][Encoding]**
Source Mode = [Encoding]

Operation: ADD
(Rm) ← (Rm) + ((WRj))

ADD Rm,@DRk

	Binary Mode	Source Mode
Bytes:	4	3
States:	4	3

[Encoding]

0 0 1 0	1 1 1 0	u u u u	1 0 1 1	s s s s	0 0 0 0

Hex Code in: **Binary Mode = [A5][Encoding]**
Source Mode = [Encoding]

Operation: ADD
(Rm) ← (Rm) + ((DRk))

ADDC A,<src>

Function: Add with carry

Description: Simultaneously adds the specified byte variable, the CY flag, and the accumulator contents, leaving the result in the accumulator. If there is a carry out of bit 7 (CY), the CY flag is set; if there is a carry out of bit 3 (AC), the AC flag is set. When adding unsigned integers, the CY flag indicates that an overflow occurred.

If there is a carry out of bit 6 but not out of bit 7, or a carry out of bit 7 but not bit 6, the OV flag is set. When adding signed integers, the OV flag indicates a negative number produced as the sum of two positive operands, or a positive sum from two negative operands.

Bit 6 and bit 7 in this description refer to the most significant byte of the operand (8, 16, or 32 bit)

Four source operand addressing modes are allowed: register, direct, register-indirect, and immediate.

Flags:

CY	AC	OV	N	Z
✓	✓	✓	✓	✓

Example: The accumulator contains 0C3H (11000011B), register 0 contains 0AAH (10101010B), and the CY flag is set. After executing the instruction

ADDC A,R0

the accumulator contains 6EH (01101110B), the AC flag is clear, and the CY and OV flags are set.

Variations

ADDC A,#data

	Binary Mode	Source Mode
Bytes:	2	2
States:	1	1

[Encoding]

0 0 1 1	0 1 0 0	immed. data

Hex Code in: **Binary Mode = [Encoding]**
Source Mode = [Encoding]

Operation: ADDC
(A) ← (A) + (CY) + #data

ADDC A,dir8

	Binary Mode	Source Mode
Bytes:	2	2
States:	1†	1†

†If this instruction addresses a port (P*x*, *x* = 0–3), add 1 state.

[Encoding]

0 0 1 1	0 1 0 1	direct addr

Hex Code in: **Binary Mode = [Encoding]**
Source Mode = [Encoding]

Operation: ADDC
(A) ← (A) + (CY) + (dir8)

ADDC A,@Ri

	Binary Mode	Source Mode
Bytes:	1	2
States:	2	3

[Encoding]

0 0 1 1	0 1 1 i

Hex Code in: **Binary Mode = [Encoding]**
Source Mode = [A5][Encoding]

Operation: ADDC
(A) ← (A) + (CY) + ((Ri))

ADDC A,Rn

	Binary Mode	Source Mode
Bytes:	1	2
States:	1	2

[Encoding]

0 0 1 1	1 r r r

Hex Code in: **Binary Mode = [Encoding]**
Source Mode = [A5][Encoding]

Operation: ADDC
(A) ← (A) + (CY) + (Rn)

AJMP addr11

Function: Absolute jump

Description: Transfers program execution to the specified address, which is formed at run time by concatenating the upper five bits of the PC (after incrementing the PC twice), opcode bits 7–5, and the second byte of the instruction. The destination must therefore be within the same 2-Kbyte "page" of program memory as the first byte of the instruction following AJMP.

Flags:

CY	AC	OV	N	Z
—	—	—	—	—

Example: The label "JMPADR" is at program memory location 0123H. After executing the instruction

AJMP JMPADR

at location 0345H, the PC contains 0123H.

	Binary Mode	Source Mode
Bytes:	2	2
States:	3	3

[Encoding]	a10 a9 a8 0	0 0 0 1	a7 a6 a5 a4	a3 a2 a1 a0

Hex Code in: **Binary Mode = [Encoding]**
Source Mode = [Encoding]

Operation: AJMP
(PC) ← (PC) + 2
(PC.10:0) ← page address

ANL <dest>,<src>

Function: Logical-AND

Description: Performs the bitwise logical-AND (Λ) operation between the specified variables and stores the results in the destination variable.

The two operands allow 10 addressing mode combinations. When the destination is the register or accumulator, the source can use register, direct, register-indirect, or immediate addressing; when the destination is a direct address, the source can be the accumulator or immediate data.

Note: When this instruction is used to modify an output port, the value used as the original port data is read from the output data latch, not the input pins.

Flags:

CY	AC	OV	N	Z
—	—	—	✓	✓

Example: Register 1 contains 0C3H (11000011B) and register 0 contains 55H (01010101B). After executing the instruction

ANL R1,R0

register 1 contains 41H (01000001B).

When the destination is a directly addressed byte, this instruction clears combinations of bits in any RAM location or hardware register. The mask byte determining the pattern of bits to be cleared would either be an immediate constant contained in the instruction or a value computed in the register or accumulator at run time. The instruction

ANL P1,#01110011B

clears bits 7, 3, and 2 of output port 1.

Variations

ANL dir8,A

	Binary Mode	Source Mode
Bytes:	2	2
States:	2†	2†

†If this instruction addresses a port (P*x*, *x* = 0–3), add 2 states.

[Encoding]	0 1 0 1	0 0 1 0	direct addr

Hex Code in: **Binary Mode = [Encoding]**
Source Mode = [Encoding]

Operation: ANL
(dir8) ← (dir8) Λ (A)

ANL dir8,#data

	Binary Mode	Source Mode
Bytes:	3	3
States:	3†	3†

†If this instruction addresses a port (P*x*, *x* = 0–3), add 1 state.

[Encoding]	0 1 0 1	0 0 1 1	direct addr	immed. data

Hex Code in: **Binary Mode = [Encoding]**
Source Mode = [Encoding]

Operation: ANL
(dir8) ← (dir8) Λ #data

ANL A,#data

	Binary Mode	Source Mode
Bytes:	2	2
States:	1	1

[Encoding]	0 1 0 1	0 1 0 0	immed. data

Hex Code in: **Binary Mode = [Encoding]**
Source Mode = [Encoding]

Operation: ANL
(A) ← (A) Λ #data

ANL A,dir8

	Binary Mode	Source Mode
Bytes:	2	2
States:	1†	1†

†If this instruction addresses a port (P*x*, *x* = 0–3), add 1 state.

[Encoding]

0 1 0 1	0 1 0 1	direct addr

Hex Code in: **Binary Mode = [Encoding]**
Source Mode = [Encoding]

Operation: ANL
(A) ← (A) Λ (dir8)

ANL A,@Ri

	Binary Mode	Source Mode
Bytes:	1	2
States:	2	3

[Encoding]

0 1 0 1	0 1 1 i

Hex Code in: **Binary Mode = [Encoding]**
Source Mode = [A5][Encoding]

Operation: ANL
(A) ← (A) Λ ((Ri))

ANL A,Rn

	Binary Mode	Source Mode
Bytes:	1	2
States:	1	2

[Encoding]

0 1 0 1	1 r r r

Hex Code in: **Binary Mode = [Encoding]**
Source Mode = [A5][Encoding]

Operation: ANL
(A) ← (A) Λ (Rn)

ANL Rmd,Rms

	Binary Mode	Source Mode
Bytes:	3	2
States:	2	1

[Encoding]

0 1 0 1	1 1 0 0	s s s s	S S S S

Hex Code in: **Binary Mode = [A5][Encoding]**
Source Mode = [Encoding]

Operation: ANL
(Rmd) ← (Rmd) Λ (Rms)

ANL WRjd,WRjs

	Binary Mode	Source Mode
Bytes:	3	2
States:	3	2

[Encoding]

0 1 0 1	1 1 0 1	t t t t	T T T T

Hex Code in: **Binary Mode = [A5][Encoding]**
Source Mode = [Encoding]

Operation: ANL
(WRjd) ← (WRjd) Λ (WRjs)

ANL Rm,#data

	Binary Mode	Source Mode
Bytes:	4	3
States:	3	2

[Encoding]

0 1 0 1	1 1 1 0	s s s s	0000	#data

Hex Code in: **Binary Mode = [A5][Encoding]**
Source Mode = [Encoding]

Operation: ANL
(Rm) ← (Rm) Λ #data

ANL WRj,#data16

	Binary Mode	Source Mode
Bytes:	5	4
States:	4	3

[Encoding]

0 1 0 1	1 1 1 0	t t t t	0 1 0 0	#data hi	#data low

Hex Code in: **Binary Mode = [A5][Encoding]**
Source Mode = [Encoding]

Operation: ANL
(WRj) ← (WRj) Λ #data16

ANL Rm,dir8

	Binary Mode	Source Mode
Bytes:	4	3
States:	3†	2†

†If this instruction addresses a port (P*x*, *x* = 0–3), add 1 state.

[Encoding]

0 1 0 1	1 1 1 0	s s s s	0 0 0 1	direct addr

Hex Code in: **Binary Mode = [A5][Encoding]**
Source Mode = [Encoding]

Operation: ANL
(Rm) ← (Rm) Λ (dir8)

ANL WRj,dir8

	Binary Mode	Source Mode
Bytes:	4	3
States:	4	3

[Encoding]

0 1 0 1	1 1 10	t t t t	0 1 0 1	direct addr

Hex Code in: **Binary Mode = [A5][Encoding]**
Source Mode = [Encoding]

Operation: ANL
(WRj) ← (WRj) Λ (dir8)

ANL Rm,dir16

	Binary Mode	Source Mode
Bytes:	5	4
States:	3	2

[Encoding]

0 1 0 1	1 1 1 0	s s s s	0 0 1 1	direct	direct

Hex Code in: **Binary Mode = [A5][Encoding]**
Source Mode = [Encoding]

Operation: ANL
(Rm) ← (Rm) Λ (dir16)

ANL WRj,dir16

	Binary Mode	Source Mode
Bytes:	5	4
States:	4	3

[Encoding]

0 1 0 1	1 1 1 0	t t t t	0 1 1 1	direct	direct

Hex Code in: **Binary Mode = [A5][Encoding]**
Source Mode = [Encoding]

Operation: ANL
(WRj) ← (WRj) Λ (dir16)

ANL Rm,@WRj

	Binary Mode	Source Mode
Bytes:	4	3
States:	3	2

[Encoding]

0 1 0 1	1 1 1 0	t t t t	1 0 0 1	s s s s	0 0 0 0

Hex Code in: **Binary Mode = [A5][Encoding]**
Source Mode = [Encoding]

Operation: ANL
(Rm) ← (Rm) Λ ((WRj))

ANL Rm,@DRk

	Binary Mode	Source Mode
Bytes:	4	3
States:	4	3

[Encoding]

0 1 0 1	1 1 1 0	u u u u	1 0 1 1	s s s s	0 0 0 0

Hex Code in: **Binary Mode = [A5][Encoding]**
Source Mode = [Encoding]

Operation: ANL
(Rm) ← (Rm) Λ ((DRk))

ANL CY,<src–bit>

Function: Logical-AND for bit variables

Description: If the Boolean value of the source bit is a logical 0, clear the CY flag; otherwise leave the CY flag in its current state. A slash ("/") preceding the operand in the assembly language indicates that the logical complement of the addressed bit is used as the source value, but the source bit itself is not affected.

Only direct addressing is allowed for the source operand.

Flags:

CY	AC	OV	N	Z
✓	—	—	—	—

Example: Set the CY flag if, and only if, P1.0 = 1, ACC. 7 = 1, and OV = 0:

```
MOV CY,P1.0    ;Load carry with input pin state
ANL CY,ACC.7 ;AND carry with accumulator bit 7
ANL CY,/OV     ;AND with inverse of overflow flag
```

ANL CY,bit51

	Binary Mode	Source Mode
Bytes:	2	2
States:	1†	1†

†If this instruction addresses a port (P*x*, *x* = 0–3), add 1 state.

[Encoding]

1 0 0 0	0 0 1 0	bit addr

Hex Code in: **Binary Mode = [Encoding]**
Source Mode = [Encoding]

Operation: ANL
(CY) ← (CY) Λ (bit51)

ANL CY,/bit51

	Binary Mode	Source Mode
Bytes:	2	2
States:	1†	1†

†If this instruction addresses a port (P*x*, *x* = 0–3), add 1 state.

[Encoding]

1 0 1 1	0 0 0 0	bit addr

Hex Code in: **Binary Mode = [Encoding]**
Source Mode = [Encoding]

Operation: ANL
(CY) ← (CY) Λ Ø (bit51)

ANL CY,bit

	Binary Mode	Source Mode
Bytes:	4	3
States:	3†	2†

†If this instruction addresses a port (P*x*, *x* = 0–3), add 1 state.

[Encoding]

1 0 1 0	1 0 0 1	1 0 0 0	0	y y y	dir addr

Hex Code in: **Binary Mode = [A5][Encoding]**
Source Mode = [Encoding]

Operation: ANL
(CY) ← (CY) Λ (bit)

ANL CY,/bit

	Binary Mode	Source Mode
Bytes:	4	3
States:	3†	2†

†If this instruction addresses a port (P*x*, *x* = 0–3), add 1 state.

[Encoding]

1 0 1 0	1 0 0 1	1 1 1 1	0	y y y	dir addr

Hex Code in: **Binary Mode = [A5][Encoding]**
Source Mode = [Encoding]

Operation: ANL
(CY) ← (CY) Λ Ø (bit)

CJNE <dest>,<src>,rel

Function: Compare and jump if not equal.

Description: Compares the magnitudes of the first two operands and branches if their values are not equal. The branch destination is computed by adding the signed relative displacement in the last instruction byte to the PC, after incrementing the PC to the start of the next instruction. If the unsigned integer value of <dest-byte> is less than the unsigned integer value of <src-byte>, the CY flag is set. Neither operand is affected.

The first two operands allow four addressing mode combinations: the accumulator may be compared with any directly addressed byte or immediate data, and any indirect RAM location or working register can be compared with an immediate constant.

Flags:

CY	AC	OV	N	Z
✓	—	—	✓	✓

Example: The accumulator contains 34H and R7 contains 56H. After executing the first instruction in the sequence

```
                CJNE    R7,#60H,NOT_EQ
;               . . .   . . .           ;R7 = 60H
NOT_EQ:         JC      REQ_LOW         ; IF R7 < 60H
;               . . .   . . .           ;R7 > 60H
```

the CY flag is set and program execution continues at label NOT_EQ. By testing the CY flag, this instruction determines whether R7 is greater or less than 60H.

If the data being presented to Port 1 is also 34H, then executing the instruction,

WAIT: CJNE A,P1,WAIT

clears the CY flag and continues with the next instruction in the sequence, since the accumulator does equal the data read from P1. (If some other value was being input on P1, the program loops at this point until the P1 data changes to 34H.)

Variations

CJNE A,#data,rel

	Binary Mode		Source Mode	
	Not Taken	Taken	Not Taken	Taken
Bytes:	3	3	3	3
States:	2	5	2	5
[Encoding]	1 0 1 1	0 1 0 0	immed. data	rel. addr

Hex Code in: **Binary Mode = [Encoding]**
Source Mode = [Encoding]

Operation:

```
(PC) ← (PC) + 3
IF (A) ≠ #data
THEN
        (PC) ← (PC) + relative offset
IF (A) < #data
THEN
        (CY) ← 1
ELSE
        (CY) ← 0
```

CJNE A,dir8,rel

	Binary Mode		Source Mode	
	Not Taken	**Taken**	**Not Taken**	**Taken**
Bytes:	3	3	3	3
States:	3	6	3	6
[Encoding]	1 0 1 1	0 1 0 1	direct addr	rel. addr

Hex Code in: **Binary Mode = [Encoding]**
Source Mode = [Encoding]

Operation:

```
(PC) ← (PC) + 3
IF (A) ≠ dir8
THEN
        (PC) ← (PC) + relative offset
IF (A) < dir8
THEN
        (CY) ← 1
ELSE
        (CY) ← 0
```

CJNE @Ri,#data,rel

	Binary Mode		Source Mode	
	Not Taken	**Taken**	**Not Taken**	**Taken**
Bytes:	3	3	4	4
States:	3	6	4	7

[Encoding]	1 0 1 1	0 1 1 i	immed. data	rel. addr

Hex Code in: **Binary Mode = [Encoding]**
Source Mode = [A5][Encoding]

Operation:

```
(PC) ← (PC) + 3
IF ((Ri)) ≠ #data
THEN
        (PC) ← (PC) + relative offset
IF ((Ri)) < #data
THEN
        (CY) ← 1
ELSE
        (CY) ← 0
```

CJNE Rn,#data,rel

	Binary Mode		Source Mode	
	Not Taken	**Taken**	**Not Taken**	**Taken**
Bytes:	3	3	4	4
States:	2	5	3	6

[Encoding]	1 01 1	1 r r r	immed. data	rel. addr

Hex Code in: **Binary Mode = [Encoding]**
Source Mode = [A5][Encoding]

Operation:

```
(PC) ← (PC) + 3
IF (Rn) ≠ #data
THEN
        (PC) ← (PC) + relative offset
IF (Rn) < #data
THEN
        (CY) ← 1
ELSE
        (CY) ← 0
```

CLR A

Function: Clear accumulator

Description: Clears the accumulator (i.e., resets all bits to zero).

Flags:

CY	AC	OV	N	Z
—	—	—	✓	✓

Example: The accumulator contains 5CH (01011100B). The instruction

CLR A

clears the accumulator to 00H (00000000B).

	Binary Mode	Source Mode
Bytes:	1	1
States:	1	1

[Encoding]		
	1 1 1 0	0 1 0 0

Hex Code in: **Binary Mode = [Encoding]**
Source Mode = [Encoding]

Operation: CLR
(A) ← 0

CLR bit

Function: Clear bit

Description: Clears the specified bit. CLR can operate on the CY flag or any directly addressable bit.

Flags: Only for instructions with CY as the operand.

CY	AC	OV	N	Z
✓	—	—	—	—

Example: Port 1 contains 5DH (01011101B). After executing the instruction

CLR P1.2

port 1 contains 59H (01011001B).

Variations

CLR bit51

	Binary Mode	Source Mode
Bytes:	4	3
States:	2†	2†

†If this instruction addresses a port (P*x*, *x* = 0–3), add 2 states.

[Encoding]			
	1 1 0 0	0 0 1 0	Bit addr

Hex Code in: **Binary Mode = [Encoding]**
Source Mode = [Encoding]

Operation: CLR
(bit51) ← 0

CLR CY

	Binary Mode	Source Mode
Bytes:	1	1
States:	1	1

[Encoding]

1 1 0 0	0 0 1 1

Hex Code in: **Binary Mode = [Encoding]**
Source Mode = [Encoding]

Operation: CLR
(CY) ← 0

CLR bit

	Binary Mode	Source Mode
Bytes:	4	4
States:	4†	3†

†If this instruction addresses a port (P*x*, *x* = 0–3), add 2 states.

[Encoding]

1 0 1 0	1 0 0 1	1 1 0 0	0	y y y	dir addr

Hex Code in: **Binary Mode = [A5][Encoding]**
Source Mode = [Encoding]

Operation: CLR
(bit) ← 0

CMP <dest>,<src>

Function: Compare

Description: Subtracts the source operand from the destination operand. The result is not stored in the destination operand. If a borrow is needed for bit 7, the CY (borrow) flag is set; otherwise it is clear.

When subtracting signed integers, the OV flag indicates a negative result when a negative value is subtracted from a positive value, or a positive result when a positive value is subtracted from a negative value.

Bit 7 in this description refers to the most significant byte of the operand (8, 16, or 32 bit)

The source operand allows four addressing modes: register, direct, immediate and indirect.

Flags:

CY	AC	OV	N	Z
✓	✓	✓	✓	✓

Example: Register 1 contains 0C9H (11001001B) and register 0 contains 54H (01010100B). The instruction

CMP R1,R0

clears the CY and AC flags and sets the OV flag.

Variations

CMP Rmd,Rms

	Binary Mode	Source Mode
Bytes:	3	2
States:	2	1

[Encoding]	1 0 1 1	1 1 0 0	s s s s	S S S S

Hex Code in: **Binary Mode = [A5][Encoding]**
Source Mode = [Encoding]

Operation: CMP
(Rmd) – (Rms)

CMP WRjd,WRjs

	Binary Mode	Source Mode
Bytes:	3	2
States:	3	2

[Encoding]	1 0 1 1	1 1 1 0	t t t t	T T T T

Hex Code in: **Binary Mode = [A5][Encoding]**
Source Mode = [Encoding]

Operation: CMP
(WRjd) – (WRjs)

CMP DRkd,DRks

	Binary Mode	Source Mode
Bytes:	3	2
States:	5	4

[Encoding]	1 0 1 1	1 1 1 1	u u u u	UUUU

Hex Code in: **Binary Mode = [A5][Encoding]**
Source Mode = [Encoding]

Operation: CMP
(DRkd) – (DRks)

CMP Rm,#data

	Binary Mode	Source Mode
Bytes:	4	3
States:	3	2

[Encoding]

1 0 1 1	1 1 1 0	s s s s	0 0 0 0	# data

Hex Code in: **Binary Mode = [A5][Encoding]**
Source Mode = [Encoding]

Operation: CMP
(Rm) – #data

CMP WRj,#data16

	Binary Mode	Source Mode
Bytes:	5	4
States:	4	3

[Encoding]

1 0 1 1	1 1 1 0	t t t t	0 1 0 0	#data hi	#data low

Hex Code in: **Binary Mode = [A5][Encoding]**
Source Mode = [Encoding]

Operation: CMP
(WRj) – #data16

CMP DRk,#0data16

	Binary Mode	Source Mode
Bytes:	5	4
States:	6	5

[Encoding]

1 0 1 1	1 1 1 0	u u u u	1 0 0 0	#data hi	#data low

Hex Code in: **Binary Mode = [A5][Encoding]**
Source Mode = [Encoding]

Operation: CMP
(DRk) – #0data16

CMP DRk,#1data16

	Binary Mode	Source Mode
Bytes:	5	4
States:	6	5

[Encoding]

1 0 1 1	1 1 1 0	u u u u	1 1 0 0	#data hi	#data hi

Hex Code in: **Binary Mode = [A5][Encoding]**
Source Mode = [Encoding]

Operation: CMP
(DRk) – #1data16

CMP Rm,dir8

	Binary Mode	Source Mode
Bytes:	4	3
States:	3†	2†

†If this instruction addresses a port (P*x*, *x* = 0–3), add 1 state.

[Encoding]	1 0 1 1	1 1 1 0	s s s s	0001	dir addr

Hex Code in: **Binary Mode = [A5][Encoding]**
Source Mode = [Encoding]

Operation: CMP
(Rm) – (dir8)

CMP WRj,dir8

	Binary Mode	Source Mode
Bytes:	4	3
States:	4	3

[Encoding]	1 0 1 1	1 1 10	t t t t	0 1 0 1	dir addr

Hex Code in: **Binary Mode = [A5][Encoding]**
Source Mode = [Encoding]

Operation: CMP
(WRj) – (dir8)

CMP Rm,dir16

	Binary Mode	Source Mode
Bytes:	5	4
States:	3	2

[Encoding]

1 0 1 1	1 1 1 0	s s s s	0 0 1 1	dir addr	dir addr

Hex Code in: **Binary Mode = [A5][Encoding]**
Source Mode = [Encoding]

Operation: CMP
(Rm) – (dir16)

CMP WRj,dir16

	Binary Mode	Source Mode
Bytes:	5	4
States:	4	3

[Encoding]

1 0 1 1	1 1 1 0	t t t t	0 1 1 1	dir addr	dir addr

Hex Code in: **Binary Mode = [A5][Encoding]**
Source Mode = [Encoding]

Operation: CMP
(WRj) – (dir16)

CMP Rm,@WRj

	Binary Mode	Source Mode
Bytes:	4	3
States:	3	2

[Encoding]

1 0 1 1	1 1 1 0	t t t t	1 0 0 1	s s s s	0 0 0 0

Hex Code in: **Binary Mode = [A5][Encoding]**
Source Mode = [Encoding]

Operation: CMP
(Rm) – ((WRj))

CMP Rm,@DRk

	Binary Mode	Source Mode
Bytes:	4	3
States:	4	3

[Encoding]

1 0 1 1	1 1 1 0	u u u u	1 0 1 1	s s s s	0 0 0 0

Hex Code in: **Binary Mode = [A5][Encoding]**
Source Mode = [Encoding]

Operation: CMP
(Rm) – ((DRk))

CPL A

Function: Complement accumulator

Description: Logically complements (Ø) each bit of the accumulator (one's complement). Clear bits are set and set bits are cleared.

Flags:

CY	AC	OV	N	Z
—	—	—	✓	✓

Example: The accumulator contains 5CH (01011100B). After executing the instruction

CPL A

the accumulator contains 0A3H (10100011B).

	Binary Mode	Source Mode
Bytes:	1	1
States:	1	1

[Encoding]	1 1 1 1	0 1 0 0

Hex Code in: **Binary Mode = [Encoding]**
Source Mode = [Encoding]

Operation: CPL
(A) ← Ø(A)

CPL bit

Function: Complement bit
Description: Complements (Ø) the specified bit variable. A clear bit is set, and a set bit is cleared. CPL can operate on the CY or any directly addressable bit.

Note: When this instruction is used to modify an output pin, the value used as the original data is read from the output data latch, not the input pin.

Flags: Only for instructions with CY as the operand.

CY	AC	OV	N	Z
✓	—	—	—	—

Example: Port 1 contains 5BH (01011101B). After executing the instruction sequence

CPL P1.1
CPL P1.2

port 1 contains 5BH (01011011B).

Variations

CPL bit51

	Binary Mode	Source Mode
Bytes:	2	2
States:	2†	2†

†If this instruction addresses a port (P*x*, *x* = 0–3), add 2 states.

[Encoding]	1 0 1 1	0 0 1 0	bit addr

Hex Code in: **Binary Mode = [Encoding]**
Source Mode = [Encoding]

Operation: CPL
(bit51) ← Ø(bit51)

CPL CY

	Binary Mode	Source Mode
Bytes:	1	1
States:	1	1

[Encoding]

1 0 1 1	0 0 1 1

Hex Code in: **Binary Mode = [Encoding]**
Source Mode = [Encoding]

Operation: CPL
(CY) ← Ø(CY)

CPL bit

	Binary Mode	Source Mode
Bytes:	4	3
States:	4†	3†

†If this instruction addresses a port (P*x*, *x* = 0–3), add 2 states.

[Encoding]

1 0 1 0	1 0 0 1	1 0 1 1	0	y y y	dir addr

Hex Code in: **Binary Mode = [A5][Encoding]**
Source Mode = [Encoding]

Operation: CPL
(bit) ← Ø(bit)

DA A

Function: Decimal-adjust accumulator for addition

Description: Adjusts the 8-bit value in the accumulator that resulted from the earlier addition of two variables (each in packed-BCD format), producing two 4-bit digits. Any ADD or ADDC instruction may have been used to perform the addition.

If accumulator bits 3:0 are greater than nine (XXXX1010–XXXX1111), or if the AC flag is set, six is added to the accumulator, producing the proper BCD digit in the low nibble. This internal addition sets the CY flag if a carry out of the lowest 4 bits propagated through all higher bits, but it does not clear the CY flag otherwise.

If the CY flag is now set, or if the upper four bits now exceed nine (1010XXXX–1111XXXX), these four bits are incremented by six, producing the proper BCD digit in the high nibble.

Again, this sets the CY flag if there was a carry out of the upper four bits, but does not clear the carry. The CY flag thus indicates if the sum of the original two BCD variables is greater than 100, allowing multiple-precision decimal addition. The OV flag is not affected.

All of this occurs during one instruction cycle. Essentially, this instruction performs the decimal conversion by adding 00H, 06H, 60H, or 66H to the accumulator, depending on initial accumulator and PSW conditions.

Note: DA A cannot simply convert a hexadecimal number in the accumulator to BCD notation, nor does DA A apply to decimal subtraction.

Flags:

CY	AC	OV	N	Z
✓	—	—	✓	✓

Example: The accumulator contains 56H (01010110B), which represents the packed BCD digits of the decimal number 56. Register 3 contains 67H (01100111B), which represents the packed BCD digits of the decimal number 67. The CY flag is set. After executing the instruction sequence

```
ADDC A,R3
DA A
```

the accumulator contains 0BEH (10111110) and the CY and AC flags are clear. The Decimal Adjust instruction then alters the accumulator to the value 24H (00100100B), indicating the packed BCD digits of the decimal number 24, the lower two digits of the decimal sum of 56, 67, and the carry-in. The CY flag is set by the Decimal Adjust instruction, indicating that a decimal overflow occurred. The true sum of 56, 67, and 1 is 124.

BCD variables can be incremented or decremented by adding 01H or 99H. If the accumulator contains 30H (representing the digits of 30 decimal), then the instruction sequence,

```
ADD A,#99H
DA A
```

leaves the CY flag set and 29H in the accumulator, since 30 + 99 = 129. The low byte of the sum can be interpreted to mean 30 – 1 = 29.

	Binary Mode	Source Mode
Bytes:	1	1
States:	1	1

[Encoding]	1 1 0 1	0 1 0 0

Hex Code in: **Binary Mode = [Encoding]**
Source Mode = [Encoding]

Operation:

```
DA
(Contents of accumulator are BCD)
IF      [[(A.3:0) > 9] V [(AC) = 1]]
          THEN (A.3:0) ← (A.3:0) + 6
                 AND
IF      [[(A.7:4) > 9] V [(CY) = 1]]
        THEN (A.7:4) ← (A.7:4) + 6
```

DEC byte

Function: Decrement

Description: Decrements the specified byte variable by 1. An original value of 00H underflows to 0FFH. Four operands addressing modes are allowed: accumulator, register, direct, or register-indirect.

Note: When this instruction is used to modify an output port, the value used as the original port data is read from the output data latch, not the input pins.

Flags:

CY	AC	OV	N	Z
—	—	—	✓	✓

Example: Register 0 contains 7FH (01111111B). On-chip RAM locations 7EH and 7FH contain 00H and 40H, respectively. After executing the instruction sequence

```
DEC @R0
DEC R0
DEC @R0
```

register 0 contains 7EH and on-chip RAM locations 7EH and 7FH are set to 0FFH and 3FH, respectively.

Variations

DEC A

	Binary Mode	Source Mode
Bytes:	1	1
States:	1	1

[Encoding]

0 0 0 1	0 1 0 0

Hex Code in: **Binary Mode = [Encoding]**
Source Mode = [Encoding]

Operation: DEC
(A) ← (A) – 1

DEC dir8

	Binary Mode	Source Mode
Bytes:	2	2
States:	2†	2†

†If this instruction addresses a port (P*x*, *x* = 0–3), add 2 states.

[Encoding]

0 0 0 1	0 1 0 1	dir addr

Hex Code in: **Binary Mode = [Encoding]**
Source Mode = [Encoding]

Operation: DEC
(dir8) ← (dir8) – 1

DEC @Ri

	Binary Mode	Source Mode
Bytes:	1	2
States:	3	4

[Encoding]	0 0 0 1	0 1 1 i

Hex Code in: **Binary Mode = [Encoding]**
Source Mode = [A5][Encoding]

Operation: DEC
((Ri)) ← ((Ri)) – 1

DEC Rn

	Binary Mode	Source Mode
Bytes:	1	2
States:	1	2

[Encoding]	0 0 0 1	1 r r r

Hex Code in: **Binary Mode = [Encoding]**
Source Mode = [A5][Encoding]

Operation: DEC
(Rn) ← (Rn) – 1

DEC <dest>,<src>

Function: Decrement

Description: Decrements the specified variable at the destination operand by 1, 2, or 4. An original value of 00H underflows to 0FFH.

Flags:

CY	AC	OV	N	Z
—	—	—	✓	✓

Example: Register 0 contains 7FH (01111111B). After executing the instruction sequence

DEC R0,#1

register 0 contains 7EH.

Variations

DEC Rm,#short

	Binary Mode	Source Mode
Bytes:	3	2
States:	2	1

[Encoding]	0 0 0 1	1 0 1 1	s s s s	0 1	v v

Hex Code in: **Binary Mode = [A5][Encoding]**
Source Mode = [Encoding]

Operation: DEC
(Rm) ← (Rm) – #short

DEC WRj,#short

	Binary Mode	Source Mode
Bytes:	3	2
States:	2	1

[Encoding]	0 0 0 1	1 0 1 1	t t t t	0 1	v v

Hex Code in: **Binary Mode = [A5][Encoding]**
Source Mode = [Encoding]

Operation: DEC
(WRj) ← (WRj) – #short

DEC DRk,#short

	Binary Mode	Source Mode
Bytes:	3	2
States:	5	4

[Encoding]	0 0 0 1	1 0 1 1	u u u u	1 1	v v

Hex Code in: **Binary Mode = [A5][Encoding]**
Source Mode = [Encoding]

Operation: DEC
(DRk) ← (DRk) – #short

DIV <dest>,<src>

Function: Divide

Description: Divides the unsigned integer in the register by the unsigned integer operand in register addressing mode and clears the CY and OV flags.

For byte operands (<dest>,<src> = Rmd,Rms) the result is 16 bits. The 8-bit quotient is stored in the higher byte of the word where Rmd resides; the 8-bit remainder is stored in the lower byte of the word where Rmd resides. For example: Register 1 contains 251 (0FBH or 11111011B) and register 5 contains 18 (12H or 00010010B). After executing the instruction

DIV R1,R5

register 1 contains 13 (0DH or 00001101B); register 0 contains 17 (11H or 00010001B), since 251 = (13 X 18) + 17; and the CY and OV bits are clear (see Flags).

Flags: The CY flag is cleared. The N flag is set if the MSB of the quotient is set. The Z flag is set if the quotient is zero.

CY	AC	OV	N	Z
0	—	✓	✓	✓

Exception: if <src> contains 00H, the values returned in both operands are undefined; the CY flag is cleared, OV flag is set, and the rest of the flags are undefined.

CY	AC	OV	N	Z
0	—	1	?	?

Variations

DIV Rmd Rms

	Binary Mode	Source Mode
Bytes:	3	2
States:	11	10

[Encoding]	1 0 0 0	1 1 0 0	s s s s	S S S S

Hex Code in: **Binary Mode = [A5][Encoding]**
Source Mode = [Encoding]

Operation: DIV (8-bit operands)
(Rmd) ← remainder (Rmd) / (Rms) if <dest> md = 0,2,4,..,14
(Rmd+1) ← quotient (Rmd) / (Rms)

(Rmd–1) ← remainder (Rmd) / (Rms) if <dest> md = 1,3,5,..,15
(Rmd) ← quotient (Rmd) / (Rms)

DIV WRjd,WRjs

	Binary Mode	Source Mode
Bytes:	3	2
States:	22	21

[Encoding]	1 0 0 0	1 1 0 1	t t t t	T T T T

Hex Code in: **Binary Mode = [A5][Encoding]**
Source Mode = [Encoding]

Operation: DIV (16-bit operands)
(WRjd) ← remainder (WRjd) / (WRjs) if <dest> jd = 0, 4, 8,... 28
(WRjd+2) ← quotient (WRjd) / (WRjs)

(WRjd–2) ← remainder (WRjd) / (WRjs) if <dest> jd = 2, 6, 10,... 30
(WRjd) ← quotient (WRjd) / (WRjs)

For word operands (<dest>,<src> = WRjd,WRjs) the 16-bit quotient is in WR(jd+2), and the 16-bit remainder is in WRjd. For example, for a destination register WR4, assume the quotient is 1122H and the remainder is 3344H. Then, the results are stored in these register file locations:

Location	4	5	6	7
Contents	33H	44H	11H	22H

DIV AB

Function: Divide

Description: Divides the unsigned 8-bit integer in the accumulator by the unsigned 8-bit integer in register B. The accumulator receives the integer part of the quotient; register B receives the integer remainder. The CY and OV flags are cleared.

Exception: if register B contains 00H, the values returned in the accumulator and register B are undefined; the CY flag is cleared and the OV flag is set.

Flags:

CY	AC	OV	N	Z
0	—	✓	✓	✓

For division by zero**:**

CY	AC	OV	N	Z
0	—	1	?	?

Hex Code in: **Binary Mode = [Encoding]**
Source Mode = [Encoding]

Example: The accumulator contains 251 (0FBH or 11111011B) and register B contains 18 (12H or 00010010B). After executing the instruction

DIV AB

the accumulator contains 13 (0DH or 00001101B); register B contains 17 (11H or 00010001B), since 251 = (13 X 18) + 17; and the CY and OV flags are clear.

	Binary Mode	**Source Mode**
Bytes:	1	1
States:	10	10

[Encoding]	1 0 0 0	0 1 0 0

Hex Code in: **Binary Mode = [Encoding]**
Source Mode = [Encoding]

Operation: DIV
(A) ← quotient (A)/(B)
(B) ← remainder (A)/(B)

DJNZ <byte>,<rel–addr>

Function: Decrement and jump if not zero

Description: Decrements the specified location by 1 and branches to the address specified by the second operand if the resulting value is not zero. An original value of 00H underflows to 0FFH. The branch destination is computed by adding the signed relative-displacement value in the last instruction byte to the PC, after incrementing the PC to the first byte of the following instruction.

The location decremented may be a register or directly addressed byte.

Note: When this instruction is used to modify an output port, the value used as the original port data is read from the output data latch, not the input pins.

Flags:

CY	AC	OV	N	Z
—	—	—	✓	✓

Example: The on-chip RAM locations 40H, 50H, and 60H contain 01H, 70H, and 15H, respectively. After executing the following instruction sequence

```
DJNZ 40H,LABEL1
DJNZ 50H,LABEL2
DJNZ 60H,LABEL
```

on-chip RAM locations 40H, 50H, and 60H contain 00H, 6FH, and 14H, respectively, and program execution continues at label LABEL2. (The first jump was not taken because the result was zero.)

This instruction provides a simple way of executing a program loop a given number of times, or for adding a moderate time delay (from 2 to 512 machine cycles) with a single instruction.

The instruction sequence,

```
        MOV R2,#8
TOGGLE: CPL P1.7
        DJNZ R2,TOGGLE
```

toggles P1.7 eight times, causing four output pulses to appear at bit 7 of output Port 1. Each pulse lasts three states: two for DJNZ and one to alter the pin.

Variations

DJNZ dir8,rel

	Binary Mode		Source Mode	
	Not Taken	**Taken**	**Not Taken**	**Taken**
Bytes:	3	3	3	3
States:	3	6	3	6
[Encoding]	1 1 0 1	0 1 0 1	direct addr	rel. addr

Hex Code in: **Binary Mode = [Encoding]**
Source Mode = [Encoding]

Operation:
```
DJNZ
(PC) ← (PC) + 2
(dir8) ← (dir8) – 1
IF (dir8) > 0 or (dir8) < 0
        THEN
            (PC) ← (PC) + rel
```

DJNZ Rn,rel

	Binary Mode		Source Mode	
	Not Taken	**Taken**	**Not Taken**	**Taken**
Bytes:	2	2	3	3
States:	2	5	3	6
[Encoding]	1 1 0 1	1 r r r	rel. addr	

Hex Code in: **Binary Mode = [Encoding]**
Source Mode = [A5][Encoding]

Operation:
```
DJNZ
(PC) ← (PC) + 2
(Rn) ← (Rn) – 1
IF (Rn) > 0 or (Rn) < 0
        THEN
            (PC) ← (PC) + rel
```

ECALL <dest>

Function: Extended call

Description: Calls a subroutine located at the specified address. The instruction adds four to the program counter to generate the address of the next instruction and then pushes the 24-bit result onto the stack (high byte first), incrementing the stack pointer by three. The 8 bits of the high word and the 16 bits of the low word of the PC are then loaded, respectively, with the second, third and fourth bytes of the ECALL instruction. Program execution continues with the instruction at this address. The subroutine may therefore begin anywhere in the full 16-Mbyte memory space.

Flags:

CY	AC	OV	N	Z
—	—	—	—	—

Example: The stack pointer contains 07H and the label "SUBRTN" is assigned to program memory location 123456H. After executing the instruction

ECALL SUBRTN

at location 012345H, SP contains 0AH; on-chip RAM locations 08H, 09H and 0AH contain 01H, 23H and 45H, respectively; and the PC contains 123456H.

Variations

ECALL addr24

	Binary Mode	Source Mode
Bytes:	5	4
States:	14	13

[Encoding]

1 0 0 1	1 0 1 0	addr23–addr16	addr15–addr8	addr7–addr0

Hex Code in: **Binary Mode = [A5][Encoding]**
Source Mode = [Encoding]

Operation:
ECALL
(PC) ← (PC) + 4
(SP) ← (SP) + 1
((SP)) ← (PC.23:16)
(SP) ← (SP) + 1
((SP)) ← (PC.15:8)
(SP) ← (SP) + 1
((SP)) ← (PC.7:0)
(PC) ← (addr.23:0)

ECALL @DRk

	Binary Mode	Source Mode
Bytes:	3	2
States:	12	11

[Encoding]

1 0 0 1	1 0 0 1	u u u u

Hex Code in: **Binary Mode = [A5][Encoding]**
Source Mode = [Encoding]

Operation:
ECALL
(PC) ← (PC) + 4
(SP) ← (SP) + 1
((SP)) ← (PC.23:16)
(SP) ← (SP) + 1
((SP)) ← (PC.15:8)
(SP) ← (SP) + 1
((SP)) ← (PC.7:0)
(PC) ← ((DRk))

EJMP <dest>

Function: Extended jump

Description: Causes an unconditional branch to the specified address by loading the 8 bits of the high order and 16 bits of the low order words of the PC with the second, third, and fourth instruction bytes. The destination may be therefore be anywhere in the full 16-Mbyte memory space.

Flags:

CY	AC	OV	N	Z
—	—	—	—	—

Example: The label "JMPADR" is assigned to the instruction at program memory location 123456H. The instruction is

EJMP JMPADR

Variations

EJMP addr24

	Binary Mode	Source Mode
Bytes:	5	4
States:	6	5

[Encoding]

1 0 0 0	1 0 1 0	addr23–addr16	addr15–addr8	addr7–addr0

Hex Code in: **Binary Mode = [A5][Encoding]**
Source Mode = [Encoding]

Operation: EJMP
(PC) ← (addr.23:0)

EJMP @DRk

	Binary Mode	Source Mode
Bytes:	3	2
States:	7	6

[Encoding]

1 0 0 0	1 0 0 1	u u u u

Hex Code in: **Binary Mode =[A5][Encoding]**
Source Mode = [Encoding]

Operation: EJMP
(PC) ← ((DRk))

ERET

Function: Extended return

Description: Pops byte 2, byte 1, and byte 0 of the 3-byte PC successively from the stack and decrements the stack pointer by 3. Program execution continues at the resulting address, which normally is the instruction immediately following ECALL.

Flags: No flags are affected.

Example: The stack pointer contains 0BH. On-chip RAM locations 08H, 09H and 0AH contain 01H, 23H and 49H, respectively. After executing the instruction

ERET

the stack pointer contains 08H and program execution continues at location 012349H.

	Binary Mode	Source Mode
Bytes:	3	2
States:	10	9
[Encoding]	1 0 1 0	1 0 1 0

Hex Code in: **Binary Mode = [A5][Encoding]**
Source Mode = [Encoding]

Operation:
ERET
(PC.23:16) ← ((SP))
(SP) ← (SP) – 1
(PC.15:8) ← ((SP))
(SP) ← (SP) – 1
(PC.7:0) ← ((SP))
(SP) ← (SP) – 1

INC <Byte>

Function: Increment

Description: Increments the specified byte variable by 1. An original value of FFH overflows to 00H. Three addressing modes are allowed for 8-bit operands: register, direct, or register-indirect.

Note: When this instruction is used to modify an output port, the value used as the original port data is read from the output data latch, not the input pins.

Flags:

CY	AC	OV	N	Z
—	—	—	✓	✓

Example: Register 0 contains 7EH (011111110B) and on-chip RAM locations 7EH and 7FH contain 0FFH and 40H, respectively. After executing the instruction sequence

INC @R0
INC R0
INC @R0

register 0 contains 7FH and on-chip RAM locations 7EH and 7FH contain 00H and 41H, respectively.

Variations

INC A

	Binary Mode	Source Mode
Bytes:	1	1
States:	1	1
[Encoding]	0 0 0 0	0 1 0 0

Hex Code in: **Binary Mode = [Encoding]**
Source Mode = [Encoding]

Operation: INC
(A) ← (A) + 1

INC dir8

	Binary Mode	Source Mode
Bytes:	2	2
States:	2†	2†

†If this instruction addresses a port (P*x*, *x* = 0–3), add 2 states.

[Encoding]

0 0 0 0	0 1 0 1	direct addr

Hex Code in: **Binary Mode = [Encoding]**
Source Mode = [Encoding]

Operation: INC
(dir8) ← (dir8) + 1

INC @Ri

	Binary Mode	Source Mode
Bytes:	1	2
States:	3	4

[Encoding]

0 0 0 0	0 1 1 i

Hex Code in: **Binary Mode = [Encoding]**
Source Mode = [A5][Encoding]

Operation: INC
((Ri) ← ((Ri)) + 1

INC Rn

	Binary Mode	Source Mode
Bytes:	1	2
States:	1	2

[Encoding]

0 0 0 0	1 r r r

Hex Code in: **Binary Mode = [Encoding]**
Source Mode = [A5][Encoding]

Operation: INC
(Rn) ← (Rn) + 1

INC <dest>,<src>

Function: Increment

Description: Increments the specified variable by 1, 2, or 4. An original value of 0FFH overflows to 00H.

Flags:

CY	AC	OV	N	Z
—	—	—	✓	✓

Example: Register 0 contains 7EH (011111110B). After executing the instruction

INC R0,#1

register 0 contains 7FH.

Variations

INC Rm,#short

	Binary Mode	Source Mode
Bytes:	3	2
States:	2	1

[Encoding]	0 0 0 0	1 0 1 1	s s s s	00	v v

Hex Code in: **Binary Mode = [A5][Encoding]**
Source Mode = [Encoding]

Operation: INC
(Rm) ← (Rm) + #short

INC WRj,#short

	Binary Mode	Source Mode
Bytes:	3	2
States:	2	1

[Encoding]	0 0 0 0	1 0 1 1	t t t t	01	v v

Hex Code in: **Binary Mode = [A5][Encoding]**
Source Mode = [Encoding]

Operation: INC
(WRj) ← (WRj) + #short

INC DRk,#short

	Binary Mode	Source Mode
Bytes:	3	2
States:	4	3

[Encoding]	0 0 0 0	1 0 1 1	u u u u	11	v v

Hex Code in: **Binary Mode = [A5][Encoding]**
Source Mode = [Encoding]

Operation: INC
(DRk) ← (DRk) + #shortdata pointer

INC DPTR

Function: Increment data pointer

Description: Increments the 16-bit data pointer by one. A 16-bit increment (modulo 2^{16}) is performed; an overflow of the low byte of the data pointer (DPL) from 0FFH to 00H increments the high byte of the data pointer (DPH) by one. An overflow of the high byte (DPH) does not increment the high word of the extended data pointer (DPX = DR56).

Flags:

CY	AC	OV	N	Z
—	—	—	✓	✓

Example: Registers DPH and DPL contain 12H and 0FEH, respectively. After the instruction sequence

```
INC DPTR
INC DPTR
INC DPTR
```

DPH and DPL contain 13H and 01H, respectively.

	Binary Mode	Source Mode
Bytes:	1	1
States:	1	1

[Encoding]	1 0 1 0	0 0 1 1

Hex Code in: **Binary Mode = [Encoding]**
Source Mode = [Encoding]

Operation: INC
(DPTR) ← (DPTR) + 1

JB bit51,rel
JB bit,rel

Function: Jump if bit set

Description: If the specified bit is a one, jump to the address specified; otherwise proceed with the next instruction. The branch destination is computed by adding the signed relative displacement in the third instruction byte to the PC, after incrementing the PC to the first byte of the next instruction. The bit tested is not modified.

Flags:

CY	AC	OV	N	Z
—	—	—	—	—

Example: Input port 1 contains 11001010B and the accumulator contains 56 (01010110B). After the instruction sequence

```
JB P1.2,LABEL1
JB ACC.2,LABEL2
```

program execution continues at label LABEL2.

Variations

JB bit51,rel

	Binary Mode		Source Mode	
	Not Taken	**Taken**	**Not Taken**	**Taken**
Bytes:	3	3	3	3
States:	2	5	2	5

[Encoding]

0 0 1 0	0 0 0 0	bit addr	rel. addr

Hex Code in: **Binary Mode = [Encoding]**
Source Mode = [Encoding]

Operation:
JB
(PC) ← (PC) + 3
IF (bit51) = 1
THEN
(PC) ← (PC) + rel

JB bit,rel

	Binary Mode		Source Mode	
	Not Taken	**Taken**	**Not Taken**	**Taken**
Bytes:	5	5	4	4
States:	4	7	3	6

[Encoding]

1 0 1 0	1 0 0 1	0 0 1 0	0	y y	direct addr	rel. addr

Hex Code in: **Binary Mode = [A5][Encoding]**
Source Mode = [Encoding]

Operation:
JB
(PC) ← (PC) + 3
IF (bit) = 1
THEN
(PC) ← (PC) + rel

JBC bit51,rel
JBC bit,rel

Function: Jump if bit is set and clear bit

Description: If the specified bit is one, branch to the specified address; otherwise proceed with the next instruction. The bit is not cleared if it is already a zero. The branch destination is computed by adding the signed relative displacement in the third instruction byte to the PC, after incrementing the PC to the first byte of the next instruction.

Note: When this instruction is used to test an output pin, the value used as the original data is read from the output data latch, not the input pin.

Flags:

CY	AC	OV	N	Z
—	—	—	—	—

Example: The accumulator contains 56H (01010110B). After the instruction sequence

```
JBC ACC.3,LABEL1
JBC ACC.2,LABEL2
```

the accumulator contains 52H (01010010B) and program execution continues at label LABEL2.

Variations

JBC bit51,rel

	Binary Mode		Source Mode	
	Not Taken	**Taken**	**Not Taken**	**Taken**
Bytes:	3	3	3	3
States:	4	7	4	7

[Encoding]	0 0 0 1	0 0 0 0	bit addr	rel. addr

Hex Code in: **Binary Mode = [Encoding]**
Source Mode = [Encoding]

Operation:

```
JBC
(PC) ← (PC) + 3
IF (bit51) = 1
        THEN
            (bit51) ← 0
            (PC) ← (PC) + rel
```

JBC bit,rel

	Binary Mode		Source Mode	
	Not Taken	**Taken**	**Not Taken**	**Taken**
Bytes:	5	5	4	4
States:	4	7	3	6

[Encoding]

1 0 1 0	1 0 0 1	0 0 0 1	0	y y y	direct addr	rel. addr

Hex Code in: **Binary Mode = [A5][Encoding]**
Source Mode = [Encoding]

Operation:
JBC
(PC) ← (PC) + 3
IF (bit51) = 1
THEN
(bit51) ← 0
(PC) ← (PC) + rel

JC rel

Function: Jump if carry is set

Description: If the CY flag is set, branch to the address specified; otherwise proceed with the next instruction. The branch destination is computed by adding the signed relative displacement in the second instruction byte to the PC, after incrementing the PC twice.

Flags:

CY	AC	OV	N	Z
!	—	—	—	—

Example: The CY flag is clear. After the instruction sequence

```
JC          LABEL1
CPL CY
JC LABEL 2
```

the CY flag is set and program execution continues at label LABEL2.

	Binary Mode		Source Mode	
	Not Taken	**Taken**	**Not Taken**	**Taken**
Bytes:	2	2	2	2
States:	1	4	1	4

[Encoding]

0 1 0 0	0 0 0 0	rel. addr

Hex Code in: **Binary Mode = [Encoding]**
Source Mode = [Encoding]

Operation:
JC
(PC) ← (PC) + 2
IF (CY) = 1
THEN
(PC) ← (PC) + rel

JE rel

Function: Jump if equal

Description: If the Z flag is set, branch to the address specified; otherwise proceed with the next instruction. The branch destination is computed by adding the signed relative displacement in the second instruction byte to the PC, after incrementing the PC twice.

Flags:

CY	AC	OV	N	Z
—	—	—	—	!

Example: The Z flag is set. After executing the instruction

JE LABEL1

program execution continues at label LABEL1.

	Binary Mode		Source Mode	
	Not Taken	**Taken**	**Not Taken**	**Taken**
Bytes:	3	3	2	2
States:	2	5	1	4

[Encoding]	0 1 1 0	1 0 0 0	rel. addr

Hex Code in: **Binary Mode = [A5][Encoding]**
Source Mode = [Encoding]

Operation: JE
(PC) ← (PC) + 2
IF (Z) = 1
THEN (PC) ← (PC) + rel

JG rel

Function: Jump if greater than

Description: If the Z flag and the CY flag are both clear, branch to the address specified; otherwise proceed with the next instruction. The branch destination is computed by adding the signed relative displacement in the second instruction byte to the PC, after incrementing the PC twice.

Flags:

CY	AC	OV	N	Z
—	—	—	!	—

Example: The instruction

JG LABEL1

causes program execution to continue at label LABEL1 if the Z flag and the CY flag are both clear.

	Binary Mode		Source Mode	
	Not Taken	**Taken**	**Not Taken**	**Taken**
Bytes:	3	3	2	2
States:	2	5	1	4

[Encoding]	0 0 1 1	1 0 0 0	rel. addr

Hex Code in: **Binary Mode = [A5][Encoding]**
Source Mode = [Encoding]

Operation: JG
(PC) ← (PC) + 2
IF (Z) = 0 AND (CY) = 0
THEN (PC) ← (PC) + rel

JLE rel

Function: Jump if less than or equal

Description: If the Z flag or the CY flag is set, branch to the address specified; otherwise proceed with the next instruction. The branch destination is computed by adding the signed relative displacement in the second instruction byte to the PC, after incrementing the PC twice.

Flags:

CY	AC	OV	N	Z
—	—	—	!	!

Example: The instruction

JLE LABEL1

causes program execution to continue at LABEL1 if the Z flag or the CY flag is set.

	Binary Mode		Source Mode	
	Not Taken	**Taken**	**Not Taken**	**Taken**
Bytes:	3	3	2	2
States:	2	5	1	4

[Encoding]	0 0 1 0	1 0 0 0	rel. addr

Hex Code in: **Binary Mode = [A5][Encoding]**
Source Mode = [Encoding]

Operation: JLE
(PC) ← (PC) + 2
IF (Z) = 1 OR (CY) = 1
THEN (PC) ← (PC) + rel

JMP @A+DPTR

Function: Jump indirect

Description: Add the 8-bit unsigned contents of the accumulator with the 16-bit data pointer and load the resulting sum into the lower 16 bits of the program counter. This is the address for subsequent instruction fetches. The contents of the accumulator and the data pointer are not affected.

Flags:

CY	AC	OV	N	Z
—	—	—	—	—

Example: The accumulator contains an even number from 0 to 6. The following sequence of instructions branch to one of four AJMP instructions in a jump table starting at JMP_TBL:

```
        MOV     DPTR,#JMP_TBL
        JMP     @A+DPTR
JMP_TBL:
        AJMP    LABEL0
        AJMP    LABEL1
        AJMP    LABEL2
        AJMP    LABEL3
```

If the accumulator contains 04H at the start this sequence, execution jumps to LABEL2. Remember that AJMP is a two-byte instruction, so the jump instructions start at every other address.

	Binary Mode	Source Mode
Bytes:	1	1
States:	5	5
[Encoding]	0 1 1 1	0 0 1 1

Hex Code in: **Binary Mode = [Encoding]**
Source Mode = [Encoding]

Operation: JMP
(PC.15:0) ← (A) + (DPTR)

JNB bit51,rel
JNB bit,rel

Function: Jump if bit not set

Description: If the specified bit is clear, branch to the specified address; otherwise proceed with the next instruction. The branch destination is computed by adding the signed relative displacement in the third instruction byte to the PC, after incrementing the PC to the first byte of the next instruction. The bit tested is not modified.

Flags:

CY	AC	OV	N	Z
—	—	—	—	—

Example: Input port 1 contains 11001010B and the accumulator contains 56H (01010110B). After executing the instruction sequence

JNB P1.3,LABEL1
JNB ACC.3,LABEL2

program execution continues at label LABEL2.

Variations

JNB bit51,rel

	Binary Mode		Source Mode	
	Not Taken	**Taken**	**Not Taken**	**Taken**
Bytes:	3	3	3	3
States:	2	5	2	5

[Encoding]

0 0 1 1	0 0 0 0	bit addr	rel. addr

Hex Code in: **Binary Mode = [Encoding]**
Source Mode = [Encoding]

Operation:
JNB
(PC) ← (PC) + 3
IF (bit51) = 0
THEN (PC) ← (PC) + rel

JNB bit,rel

	Binary Mode		Source Mode	
	Not Taken	**Taken**	**Not Taken**	**Taken**
Bytes:	5	5	4	4
States:	4	7	3	6

[Encoding]

1 0 1 0	1 0 0 1	0 0 1 1	0	y y	direct addr	rel. addr

Hex Code in: **Binary Mode = [A5][Encoding]**
Source Mode = [Encoding]

Operation:
JNB
(PC) ← (PC) + 3
IF (bit) = 0
THEN
(PC) ← (PC) + rel

JNC rel

Function: Jump if carry not set

Description: If the CY flag is clear, branch to the address specified; otherwise proceed with the next instruction. The branch destination is computed by adding the signed relative displacement in the second instruction byte to the PC, after incrementing the PC twice to point to the next instruction. The CY flag is not modified.

Flags:

CY	AC	OV	N	Z
!	—	—	—	—

Example: The CY flag is set. The instruction sequence

```
JNC LABEL1
CPL CY
JNC LABEL2
```

clears the CY flag and causes program execution to continue at label LABEL2.

	Binary Mode		Source Mode	
	Not Taken	**Taken**	**Not Taken**	**Taken**
Bytes:	2	2	2	2
States:	1	4	1	4

[Encoding]

0 1 0 1	0 0 0 0	rel. addr

Hex Code in: **Binary Mode = [Encoding]**
Source Mode = [Encoding]

Operation:

```
JNC
(PC) ← (PC) + 2
IF (CY) = 0
    THEN (PC) ← (PC) + rel
```

JNE rel

Function: Jump if not equal

Description: If the Z flag is clear, branch to the address specified; otherwise proceed with the next instruction. The branch destination is computed by adding the signed relative displacement in the second instruction byte to the PC, after incrementing the PC twice.

Flags:

CY	AC	OV	N	Z
—	—	—	—	!

Example: The instruction

JNE LABEL1

causes program execution to continue at LABEL1 if the Z flag is clear.

	Binary Mode		Source Mode	
	Not Taken	**Taken**	**Not Taken**	**Taken**
Bytes:	3	3	2	2
States:	2	5	1	4
[Encoding]	0 1 1 1	1 0 0 0	rel. addr	

Hex Code in: **Binary Mode = [A5][Encoding]**
Source Mode = [Encoding]

Operation:
JNE
(PC) ← (PC) + 2
IF (Z) = 0
THEN (PC) ← (PC) + rel

JNZ rel

Function: Jump if accumulator not zero

Description: If any bit of the accumulator is set, branch to the specified address; otherwise proceed with the next instruction. The branch destination is computed by adding the signed relative displacement in the second instruction byte to the PC, after incrementing the PC twice. The accumulator is not modified.

Flags:

CY	AC	OV	N	Z
—	—	—	—	!

Example: The accumulator contains 00H. After executing the instruction sequence

```
JNZ LABEL1
INC A
JNZ LABEL2
```

the accumulator contains 01H and program execution continues at label LABEL2.

	Binary Mode		Source Mode	
	Not Taken	**Taken**	**Not Taken**	**Taken**
Bytes:	2	2	2	2
States:	2	5	2	5
[Encoding]	0 1 1 1	0 0 0 0	rel. addr	

Hex Code in: **Binary Mode = [Encoding]**
Source Mode = [Encoding]

Operation:
JNZ
(PC) ← (PC) + 2
IF (A) ≠ 0
THEN (PC) ← (PC) + rel

JSG rel

Function: Jump if greater than (signed)

Description: If the Z flag is clear AND the N flag and the OV flag have the same value, branch to the address specified; otherwise proceed with the next instruction. The branch destination is computed by adding the signed relative displacement in the second instruction byte to the PC, after incrementing the PC twice.

Flags:

CY	AC	OV	N	Z
—	—	!	!	!

Example: The instruction

JSG LABEL1

causes program execution to continue at LABEL1 if the Z flag is clear AND the N flag and the OV flag have the same value.

	Binary Mode		Source Mode	
	Not Taken	**Taken**	**Not Taken**	**Taken**
Bytes:	3	3	2	2
States:	2	5	1	4

[Encoding]	0 0 0 1	1 0 0 0	rel. addr

Hex Code in: **Binary Mode = [A5][Encoding]**
Source Mode = [Encoding]

Operation: JSG
(PC) ← (PC) + 2
IF [(N) = 0 AND (N) = (OV)]
THEN (PC) ← (PC) + rel

JSGE rel

Function: Jump if greater than or equal (signed)

Description: If the N flag and the OV flag have the same value, branch to the address specified; otherwise proceed with the next instruction. The branch destination is computed by adding the signed relative displacement in the second instruction byte to the PC, after incrementing the PC twice.

Flags:

CY	AC	OV	N	Z
—	—	!	!	!

Example: The instruction

JSGE LABEL1

causes program execution to continue at LABEL1 if the N flag and the OV flag have the same value.

	Binary Mode		Source Mode	
	Not Taken	**Taken**	**Not Taken**	**Taken**
Bytes:	3	3	2	2
States:	2	5	1	4

[Encoding]	0 1 0 1	1 0 0 0	rel. addr

Hex Code in: **Binary Mode = [A5][Encoding]**
Source Mode = [Encoding]

Operation: JSGE
(PC) ← (PC) + 2
IF [(N) = (OV)]
THEN (PC) ← (PC) + rel

JSL rel

Function: Jump if less than (signed)

Description: If the N flag and the OV flag have different values, branch to the address specified; otherwise proceed with the next instruction. The branch destination is computed by adding the signed relative displacement in the second instruction byte to the PC, after incrementing the PC twice.

Flags:

CY	AC	OV	N	Z
—	—	!	!	!

Example: The instruction

JSL LABEL1

causes program execution to continue at LABEL1 if the N flag and the OV flag have different values.

	Binary Mode		Source Mode	
	Not Taken	**Taken**	**Not Taken**	**Taken**
Bytes:	3	3	2	2
States:	2	5	1	4

[Encoding]	0 1 0 0	1 0 0 0	rel. addr

Hex Code in: **Binary Mode = [A5][Encoding]**
Source Mode = [Encoding]

Operation: JSL
(PC) ← (PC) + 2
IF (N) ≠ (OV)
THEN (PC) ← (PC) + rel

JSLE rel

Function: Jump if less than or equal (signed)

Description: If the Z flag is set OR if the the N flag and the OV flag have different values, branch to the address specified; otherwise proceed with the next instruction. The branch destination is computed by adding the signed relative displacement in the second instruction byte to the PC, after incrementing the PC twice.

Flags:

CY	AC	OV	N	Z
—	—	!	!	!

Example: The instruction

JSLE LABEL1

causes program execution to continue at LABEL1 if the Z flag is set OR if the the N flag and the OV flag have different values.

	Binary Mode		Source Mode	
	Not Taken	**Taken**	**Not Taken**	**Taken**
Bytes:	3	3	2	2
States:	2	5	1	4

[Encoding]	0 0 0 0	1 0 0 0	rel. addr

Hex Code in: **Binary Mode = [A5][Encoding]**
Source Mode = [Encoding]

Operation: JSLE
(PC) ← (PC) + 2
IF {(Z) = 1 OR [(N) ≠ (OV)]}
THEN (PC) ← (PC) + rel

JZ rel

Function: Jump if accumulator zero

Description: If all bits of the accumulator are clear (zero), branch to the address specified; otherwise proceed with the next instruction. The branch destination is computed by adding the signed relative displacement in the second instruction byte to the PC, after incrementing the PC twice. The accumulator is not modified.

Flags:

CY	AC	OV	N	Z
—	—	—	—	!

Example: The accumulator contains 01H. After executing the instruction sequence

```
JZ LABEL1
DEC A
JZ LABEL2
```

the accumulator contains 00H and program execution continues at label LABEL2.

	Binary Mode		Source Mode	
	Not Taken	**Taken**	**Not Taken**	**Taken**
Bytes:	2	2	2	2
States:	2	5	2	5

[Encoding]	0 1 1 0	0 0 0 0	rel. addr

Hex Code in: **Binary Mode = [Encoding]**
Source Mode = [Encoding]

Operation: JZ
(PC) ← (PC) + 2
IF (A) = 0
THEN (PC) ← (PC) + rel

LCALL <dest>

Function: Long call

Description: Calls a subroutine located at the specified address. The instruction adds three to the program counter to generate the address of the next instruction and then pushes the 16-bit result onto the stack (low byte first). The stack pointer is incremented by two. The high and low bytes of the PC are then loaded, respectively, with the second and third bytes of the LCALL instruction. Program execution continues with the instruction at this address. The subroutine may therefore begin anywhere in the 64-Kbyte region of memory where the next instruction is located.

Flags:

CY	AC	OV	N	Z
—	—	—	—	—

Example: The stack pointer contains 07H and the label "SUBRTN" is assigned to program memory location 1234H. After executing the instruction

LCALL SUBRTN

at location 0123H, the stack pointer contains 09H, on-chip RAM locations 08H and 09H contain 01H and 26H, and the PC contains 1234H.

LCALL addr16

	Binary Mode	Source Mode
Bytes:	3	3
States:	9	9

[Encoding]	0 0 0 1	0 0 1 0	addr15–addr8	addr7–addr0

Hex Code in: **Binary Mode = [Encoding]**
Source Mode = [Encoding]

Operation: LCALL
(PC) ← (PC) + 3
(SP) ← (SP) + 1
((SP)) ← (PC.7:0)
(SP) ← (SP) + 1
((SP)) ← (PC.15:8)
(PC) ← (addr.15:0)

LCALL @WRj

	Binary Mode	Source Mode
Bytes:	3	2
States:	9	8

[Encoding]	1 0 0 1	1 0 0 1	t t t t	0 1 0 0

Hex Code in: **Binary Mode = [A5][Encoding]**
Source Mode = [Encoding]

Operation: LCALL
(PC) ← (PC) + 3
(SP) ← (SP) + 1
((SP)) ← (PC.7:0)
(SP) ← (SP) + 1
((SP)) ← (PC.15:8)
(PC) ← ((WRj))

LJMP <dest>

Function: Long Jump

Description: Causes an unconditional branch to the specified address, by loading the high and low bytes of the PC (respectively) with the second and third instruction bytes. The destination may therefore be anywhere in the 64-Kbyte memory region where the next instruction is located.

Flags:

CY	AC	OV	N	Z
—	—	—	—	—

Example: The label "JMPADR" is assigned to the instruction at program memory location 1234H. After executing the instruction

LJMP JMPADR

at location 0123H, the program counter contains 1234H.

LJMP addr16

	Binary Mode	Source Mode
Bytes:	3	3
States:	5	5

[Encoding]	0 0 0 0	0 0 1 0	addr15–addr8	addr7–addr0

Hex Code in: **Binary Mode = [Encoding]**
Source Mode = [Encoding]

Operation: LJMP
(PC) ← (addr.15:0)

LJMP @WRj

	Binary Mode	Source Mode
Bytes:	3	2
States:	6	5

[Encoding]	1 0 0 0	1 0 0 1	t t t t	0 1 0 0

Hex Code in: **Binary Mode = [A5][Encoding]**
Source Mode = [Encoding]

Operation: LJMP
(PC) ← ((WRj))

MOV <dest>,<src>

Function: Move byte variable

Description: Copies the byte variable specified by the second operand into the location specified by the first operand. The source byte is not affected.

This is by far the most flexible operation. Twenty-four combinations of source and destination addressing modes are allowed.

Flags:

CY	AC	OV	N	Z
—	—	—	—	—

Example: On-chip RAM location 30H contains 40H, on-chip RAM location 40H contains 10H, and input port 1 contains 11001010B (0CAH). After executing the instruction sequence

```
MOV     R0,#30H     ;R0 < = 30H
MOV     A,@R0       ;A < = 40H
MOV     R1,A        ;R1 < = 40H
MOV     B,@R1       ;B < = 10H
MOV     @R1,P1      ;RAM (40H) < = 0CAH
MOV     P2,P1       ;P2 #0CAH
```

register 0 contains 30H, the accumulator and register 1 contain 40H, register B contains 10H, and on-chip RAM location 40H and output port 2 contain 0CAH (11001010B).

Variations

MOV A,#data

	Binary Mode	Source Mode
Bytes:	2	2
States:	1	1

[Encoding]

0 1 1 1	0 1 0 0	immed. data

Hex Code in: **Binary Mode = [Encoding]**
Source Mode = [Encoding]

Operation: MOV
(A) ← #data

MOV dir8,#data

	Binary Mode	Source Mode
Bytes:	3	3
States:	3†	3†

†If this instruction addresses a port (P*x*, *x* = 0–3), add 1 state.

[Encoding]

0 1 1 1	0 1 0 1	direct addr	immed. data

Hex Code in: **Binary Mode = [Encoding]**
Source Mode = [Encoding]

Operation: MOV
(dir8) ← #data

MOV @Ri,#data

	Binary Mode	Source Mode
Bytes:	2	3
States:	3	4

[Encoding]

0 1 1 1	0 1 1 i	immed. data

Hex Code in: **Binary Mode = [Encoding]**
Source Mode = [A5][Encoding]

Operation: MOV
((Ri)) ← #data

MOV Rn,#data

	Binary Mode	Source Mode
Bytes:	2	3
States:	1	2

[Encoding]	0 1 1 1	1 r r r r	immed. data

Hex Code in: **Binary Mode = [Encoding]**
Source Mode = [A5][Encoding]

Operation: MOV
(Rn) ← #data

MOV dir8,dir8

	Binary Mode	Source Mode
Bytes:	3	3
States:	3	3

[Encoding]	1 0 0 0	0 1 0 1	direct addr	direct addr

Hex Code in: **Binary Mode = [Encoding]**
Source Mode = [Encoding]

Operation: MOV
(dir8) ← (dir8)

MOV dir8,@Ri

	Binary Mode	Source Mode
Bytes:	2	3
States:	3	4

[Encoding]	1 0 0 0	0 1 1 i	direct addr

Hex Code in: **Binary Mode = [Encoding]**
Source Mode = [A5][Encoding]

Operation: MOV
(dir8) ← ((Ri))

MOV dir8,Rn

	Binary Mode	Source Mode
Bytes:	2	3
States:	2†	3†

†If this instruction addresses a port (P*x*, *x* = 0–3), add 1 state.

[Encoding]	1 0 0 0	1 r r r	direct addr

Hex Code in: **Binary Mode = [Encoding]**
Source Mode = [A5][Encoding]

Operation: MOV
(dir8) ← (Rn)

MOV @Ri,dir8

	Binary Mode	Source Mode
Bytes:	2	3
States:	3	4

[Encoding]	1 0 1 0	0 1 1 i	direct addr

Hex Code in: **Binary Mode = [Encoding]**
Source Mode = [A5][Encoding]

Operation: MOV
((Ri)) ← (dir8)

MOV Rn,dir8

	Binary Mode	Source Mode
Bytes:	2	3
States:	1†	2†

†If this instruction addresses a port (P*x*, *x* = 0–3), add 1 state.

[Encoding]	1 0 1 0	1 r r r	direct addr

Hex Code in: **Binary Mode = [Encoding]**
Source Mode = [A5][Encoding]

Operation: MOV
(Rn) ← (dir8)

MOV A,dir8

	Binary Mode	Source Mode
Bytes:	2	2
States:	1†	1†

†If this instruction addresses a port (P*x*, *x* = 0–3), add 1 state.

[Encoding]	1 1 1 0	0 1 0 1	direct addr

Hex Code in: **Binary Mode = [Encoding]**
Source Mode = [Encoding]

Operation: MOV
(A) ← (dir8)

MOV A,@Ri

	Binary Mode	Source Mode
Bytes:	1	2
States:	2	3

[Encoding]

1 1 1 0	0 1 1 i

Hex Code in: **Binary Mode = [Encoding]**
Source Mode = [A5][Encoding]

Operation: MOV
(A) ← ((Ri))

MOV A,Rn

	Binary Mode	Source Mode
Bytes:	1	2
States:	1	2

[Encoding]

1 1 1 0	1 r r r

Hex Code in: **Binary Mode = [Encoding]**
Source Mode = [A5][Encoding]

Operation: MOV
(A) ← (Rn)

MOV dir8,A

	Binary Mode	Source Mode
Bytes:	2	2
States:	2†	2†

†If this instruction addresses a port (P*x*, *x* = 0–3), add 1 state.

[Encoding]

1 1 1 1	0 1 0 1	direct addr

Hex Code in: **Binary Mode = [Encoding]**
Source Mode = [Encoding]

Operation: MOV
(dir8) ← (A)

MOV @Ri,A

	Binary Mode	Source Mode
Bytes:	1	2
States:	3	4

[Encoding]

1 1 1 1	0 1 1 i

Hex Code in: **Binary Mode = [Encoding]**
Source Mode = [A5][Encoding]

Operation: MOV
((Ri)) ← (A)

MOV Rn,A

	Binary Mode	Source Mode
Bytes:	1	2
States:	1	2

[Encoding]	1 1 1 1	1 1 1 r

Hex Code in: **Binary Mode = [Encoding]**
Source Mode = [A5][Encoding]

Operation: MOV
(Rn) ← (A)

MOV Rmd,Rms

	Binary Mode	Source Mode
Bytes:	3	2
States:	2	1

[Encoding]	0 1 1 1	1 1 0 0	s s s s	S S S S

Hex Code in: **Binary Mode = [A5][Encoding]**
Source Mode = [Encoding]

Operation: MOV
(Rmd) ← (Rms)

MOV WRjd,WRjs

	Binary Mode	Source Mode
Bytes:	3	2
States:	2	1

[Encoding]	0 1 1 1	1 1 0 1	t t t t	T T T T

Hex Code in: **Binary Mode = [A5][Encoding]**
Source Mode = [Encoding]

Operation: MOV
(WRjd) ← (WRjs)

MOV DRkd,DRks

	Binary Mode	Source Mode
Bytes:	3	2
States:	3	2

[Encoding]

0 1 1 1	1 1 1 1	u u u u	UUUU

Hex Code in: **Binary Mode = [A5][Encoding]**
Source Mode = [Encoding]

Operation: MOV
(DRkd) ← (DRks)

MOV Rm,#data

	Binary Mode	Source Mode
Bytes:	4	3
States:	3	2

[Encoding]

0 1 1 1	1 1 1 0	s s s s	0 0 0 0	#data

Hex Code in: **Binary Mode = [A5][Encoding]**
Source Mode = [Encoding]

Operation: MOV
(Rm) ← #data

MOV WRj,#data16

	Binary Mode	Source Mode
Bytes:	5	4
States:	3	2

[Encoding]

0 1 1 1	1 1 1 0	t t t t	0 1 0 0	#data hi	#data low

Hex Code in: **Binary Mode = [A5][Encoding]**
Source Mode = [Encoding]

Operation: MOV
(WRj) ← #data16

MOV DRk,#0data16

	Binary Mode	Source Mode
Bytes:	5	4
States:	5	4

[Encoding]

0 1 1 1	1 1 1 0	u u u u	1 0 0 0	#data hi	#data low

Hex Code in: Binary Mode = [A5][Encoding]
Source Mode = [Encoding]

Operation: MOV
(DRk) ← #0data16

MOV DRk,#1data16

	Binary Mode	Source Mode
Bytes:	5	4
States:	5	4

[Encoding]

0 1 1 1	1 1 1 0	u u u u	1 1 0 0	#data hi	#data low

Hex Code in: Binary Mode = [A5][Encoding]
Source Mode = [Encoding]

Operation: MOV
(DRk) ← #1data16

MOV Rm,dir8

	Binary Mode	Source Mode
Bytes:	4	3
States:	3†	2†

†If this instruction addresses a port (P*x*, *x* = 0–3), add 1 state.

[Encoding]

0 1 1 1	1 1 1 0	s s s s	0 0 0 1	direct addr

Hex Code in: **Binary Mode = [A5][Encoding]**
Source Mode = [Encoding]

Operation: MOV
(Rm) ← (dir8)

MOV WRj,dir8

	Binary Mode	Source Mode
Bytes:	4	3
States:	4	3

[Encoding]

0 1 1 1	1 1 1 0	t t t t	0 1 0 1	direct addr

Hex Code in: **Binary Mode = [A5][Encoding]**
Source Mode = [Encoding]

Operation: MOV
(WRj) ← (dir8)

MOV DRk,dir8

	Binary Mode	Source Mode
Bytes:	4	3
States:	6	5

[Encoding]

0 1 1 1	1 1 1 0	u u u u	1 1 0 1	direct addr

Hex Code in: **Binary Mode = [A5][Encoding]**
Source Mode = [Encoding]

Operation: MOV
(DRk) ← (dir8)

MOV Rm,dir16

	Binary Mode	Source Mode
Bytes:	5	4
States:	3	2

[Encoding]

0 1 1 1	1 1 1 0	s s s s	0 0 1 1	direct addr	direct addr

Hex Code in: **Binary Mode = [A5][Encoding]**
Source Mode = [Encoding]

Operation: MOV
(Rm) ← (dir16)

MOV WRj,dir16

	Binary Mode	Source Mode
Bytes:	5	4
States:	4	3

[Encoding]

0 1 1 1	1 1 1 0	t t t t	0 1 1 1	direct addr	direct addr

Hex Code in: **Binary Mode = [A5][Encoding]**
Source Mode = [Encoding]

Operation: MOV
(WRj) ← (dir16)

MOV DRk,dir16

	Binary Mode	Source Mode
Bytes:	5	4
States:	6	5

[Encoding]

0 1 1 1	1 1 1 0	u u u u	1 1 1 1	direct addr	direct addr

Hex Code in: **Binary Mode = [A5][Encoding]**
Source Mode = [Encoding]

Operation: MOV
(DRk) ← (dir16)

MOV Rm,@WRj

	Binary Mode	Source Mode
Bytes:	4	3
States:	2	2

[Encoding]

0111	1110	tttt	1001	ssss	0000

Hex Code in: **Binary Mode = [A5][Encoding]**
Source Mode = [Encoding]

Operation: MOV
(Rm) ← ((WRj))

MOV Rm,@DRk

	Binary Mode	Source Mode
Bytes:	4	3
States:	4	3

[Encoding]

0111	1110	uuuu	1011	ssss	0000

Hex Code in: **Binary Mode = [A5][Encoding]**
Source Mode = [Encoding]

Operation: MOV
(Rm) ← ((DRk))

MOV WRjd,@WRjs

	Binary Mode	Source Mode
Bytes:	4	3
States:	4	3

[Encoding]

0000	1011	TTTT	1000	tttt	0000

Hex Code in: **Binary Mode = [A5][Encoding]**
Source Mode = [Encoding]

Operation: MOV
(WRjd) ← ((WRjs))

MOV WRj,@DRk

	Binary Mode	Source Mode
Bytes:	4	3
States:	5	4

[Encoding]

0 0 0 0	1 0 1 1	u u u u	1 0 1 0	t t t t	0 0 0 0

Hex Code in: **Binary Mode = [A5][Encoding]**
Source Mode = [Encoding]

Operation: MOV
(WRj) ← ((DRk))

MOV dir8,Rm

	Binary Mode	Source Mode
Bytes:	4	3
States:	4†	3†

†If this instruction addresses a port (P*x*, *x* = 0–3), add 1 state.

[Encoding]

0 1 1 1	1 0 1 0	s s s s	0 0 1 1	direct addr

Hex Code in: **Binary Mode = [A5][Encoding]**
Source Mode = [Encoding]

Operation: MOV
(dir8) ← (Rm)

MOV dir8,WRj

	Binary Mode	Source Mode
Bytes:	4	3
States:	5	4

[Encoding]

0 1 1 1	1 0 1 0	t t t t	0 1 0 1	direct addr

Hex Code in: **Binary Mode = [A5][Encoding]**
Source Mode = [Encoding]

Operation: MOV
(dir8) ← (WRj)

MOV dir8,DRk

	Binary Mode	Source Mode
Bytes:	4	3
States:	7	6

[Encoding]

0 1 1 1	1 0 1 0	u u u u	1 1 0 1	direct addr

Hex Code in: **Binary Mode = [A5][Encoding]**
Source Mode = [Encoding]

Operation: MOV
(dir8) ← (DRk)

MOV dir16,Rm

	Binary Mode	Source Mode
Bytes:	5	4
States:	4	3

[Encoding]

0 1 1 1	1 0 1 0	s s s s	0 0 1 1	direct addr	direct addr

Hex Code in: **Binary Mode = [A5][Encoding]**
Source Mode = [Encoding]

Operation: MOV
(dir16) ← (Rm)

MOV dir16,WRj

	Binary Mode	Source Mode
Bytes:	5	4
States:	5	4

[Encoding]

0 1 1 1	1 0 1 0	t t t t	0 1 1 1	direct addr	direct addr

Hex Code in: **Binary Mode = [A5][Encoding]**
Source Mode = [Encoding]

Operation: MOV
(dir16) ← (WRj)

MOV dir16,DRk

	Binary Mode	Source Mode
Bytes:	5	4
States:	7	6

[Encoding]

0 1 1 1	1 0 1 0	u u u u	1 1 1 1	direct addr	direct addr

Hex Code in: **Binary Mode = [A5][Encoding]**
Source Mode = [Encoding]

Operation: MOV
(dir16) ← (DRk)

MOV @WRj,Rm

	Binary Mode	Source Mode
Bytes:	4	3
States:	4	3

[Encoding]

0 1 1 1	1 0 1 0	t t t t	1 0 0 1	s s s s	0 0 0 0

Hex Code in: **Binary Mode = [A5][Encoding]**
Source Mode = [Encoding]

Operation: MOV
((WRj)) ← (Rm)

MOV @DRk,Rm

	Binary Mode	Source Mode
Bytes:	4	3
States:	5	4

[Encoding]

0 1 1 1	1 0 1 0	u u u u	1 0 1 1	s s s s	0 0 0 0

Hex Code in: **Binary Mode = [A5][Encoding]**
Source Mode = [Encoding]

Operation: MOV
((DRk)) ← (Rm)

MOV @WRjd,WRjs

	Binary Mode	Source Mode
Bytes:	4	3
States:	5	4

[Encoding]

0 0 0 1	1 0 1 1	t t t t	1 0 0 0	T T T T	0 0 0 0

Hex Code in: **Binary Mode = [A5][Encoding]**
Source Mode = [Encoding]

Operation: MOV
((WRjd)) ← (WRjs)

MOV @DRk,WRj

	Binary Mode	Source Mode
Bytes:	4	3
States:	6	5

[Encoding]

0 0 0 1	1 0 1 1	u u u u	1 0 1 0	t t t t	0 0 0 0

Hex Code in: **Binary Mode = [A5][Encoding]**
Source Mode = [Encoding]

Operation: MOV
((DRk)) ← (WRj)

MOV Rm,@WRj + dis16

	Binary Mode	Source Mode
Bytes:	5	4
States:	6	5

[Encoding]

0 0 0 0	1 0 0 1	s s s s	t t t t	dis hi	dis low

Hex Code in: **Binary Mode = [A5][Encoding]**
Source Mode = [Encoding]

Operation: MOV
(Rm) ← ((WRj)) + (dis)

MOV WRj,@WRj + dis16

	Binary Mode	Source Mode
Bytes:	5	4
States:	7	6

[Encoding]

0 1 0 0	1 0 0 1	t t t t	T T T T	dis hi	dis low

Hex Code in: **Binary Mode = [A5][Encoding]**
Source Mode = [Encoding]

Operation: MOV
(WRj) ← ((WRj)) + (dis)

MOV Rm,@DRk + dis16

	Binary Mode	Source Mode
Bytes:	5	4
States:	7	6

[Encoding]

0 0 1 0	1 0 0 1	s s s s	u u u u	dis hi	dis low

Hex Code in: **Binary Mode = [A5][Encoding]**
Source Mode = [Encoding]

Operation: MOV
(Rm) ← ((DRk)) + (dis)

MOV WRj,@DRk + dis16

	Binary Mode	Source Mode
Bytes:	5	4
States:	8	7

[Encoding]

0 1 1 0	1 0 0 1	t t t t	u u u u	dis hi	dis low

Hex Code in: **Binary Mode = [A5][Encoding]**
Source Mode = [Encoding]

Operation: MOV
(WRj) ← ((DRk)) + (dis)

MOV @WRj + dis16,Rm

	Binary Mode	Source Mode
Bytes:	5	4
States:	6	5

[Encoding]

0 0 0 1	1 0 0 1	t t t t	s s s s	dis hi	dis low

Hex Code in: **Binary Mode = [A5][Encoding]**
Source Mode = [Encoding]

Operation: MOV
((WRj)) + (dis) ← (Rm)

MOV @WRj + dis16,WRj

	Binary Mode	Source Mode
Bytes:	5	4
States:	7	6

[Encoding]

0 1 0 1	1 0 0 1	t t t t	T T T T	dis hi	dis low

Hex Code in: **Binary Mode = [A5][Encoding]**
Source Mode = [Encoding]

Operation: MOV
((WRj)) + (dis) ← (WRj)

MOV @DRk + dis16,Rm

	Binary Mode	Source Mode
Bytes:	5	4
States:	7	6

[Encoding]

0 0 1 1	1 0 0 1	u u u u	s s s s	dis hi	dis low

Hex Code in: **Binary Mode = [A5][Encoding]**
Source Mode = [Encoding]

Operation: MOV
((DRk)) + (dis) ← (Rm)

MOV @DRk + dis16,WRj

	Binary Mode	Source Mode
Bytes:	5	4
States:	8	7

[Encoding]

0 1 1 1	1 0 0 1	u u u u	t t t t	dis hi	dis low

Hex Code in: **Binary Mode = [A5][Encoding]**
Source Mode = [Encoding]

Operation: MOV
((DRk)) + (dis) ← (WRj)

MOV <dest–bit>,<src–bit>

Function: Move bit data

Description: Copies the Boolean variable specified by the second operand into the location specified by the first operand. One of the operands must be the CY flag; the other may be any directly addressable bit. Does not affect any other register.

Flags:

CY	AC	OV	N	Z
✓	—	—	—	—

Example: The CY flag is set, input Port 3 contains 11000101B, and output Port 1 contains 35H (00110101B). After executing the instruction sequence

```
MOV P1.3,CY
MOV CY,P3.3
MOV P1.2,CY
```

the CY flag is clear and Port 1 contains 39H (00111001B).

Variations

MOV bit51,CY

	Binary Mode	Source Mode
Bytes:	2	2
States:	2†	2†

†If this instruction addresses a port (P*x*, *x* = 0–3), add 2 states.

[Encoding]

1 0 0 1	0 0 1 0	bit addr

Hex Code in: **Binary Mode = [Encoding]**
Source Mode = [Encoding]

Operation: MOV
(bit51) ← (CY)

MOV CY,bit51

	Binary Mode	Source Mode
Bytes:	2	2
States:	1†	1†

†If this instruction addresses a port (P*x*, *x* = 0–3), add 1 state.

[Encoding]

1 0 1 0	0 0 1 0	bit addr

Hex Code in: **Binary Mode = [Encoding]**
Source Mode = [Encoding]

Operation: MOV
(CY) ← (bit51)

MOV bit,CY

	Binary Mode	Source Mode
Bytes:	4	3
States:	4†	3†

†If this instruction addresses a port (P*x*, *x* = 0–3), add 2 states.

[Encoding]

1 0 1 0	1 0 0 1	1 0 0 1	0	y y y	direct addr

Hex Code in: **Binary Mode = [A5][Encoding]**
Source Mode = [Encoding]

Operation: MOV
(bit) ← (CY)

MOV CY,bit

	Binary Mode	Source Mode
Bytes:	4	3
States:	3†	2†

†If this instruction addresses a port (P*x*, *x* = 0–3), add 1 state.

[Encoding]

1 0 1 0	1 0 0 1	1 0 1 0	0	y y y	direct addr

Hex Code in: **Binary Mode = [A5][Encoding]**
Source Mode = [Encoding]

Operation: MOV
(CY) ← (bit)

MOV DPTR,#data16

Function: Load data pointer with a 16-bit constant

Description: Loads the 16-bit data pointer (DPTR) with the specified 16-bit constant. The high byte of the constant is loaded into the high byte of the data pointer (DPH). The low byte of the constant is loaded into the low byte of the data pointer (DPL).

Flags:

CY	AC	OV	N	Z
—	—	—	—	—

Example: After executing the instruction

MOV DPTR,#1234H

DPTR contains 1234H (DPH contains 12H and DPL contains 34H).

	Binary Mode	**Source Mode**
Bytes:	3	3
States:	2	2

[Encoding]

1 0 0 1	0 0 0 0	data hi	data low

Hex Code in: **Binary Mode = [Encoding]**
Source Mode = [Encoding]

Operation: MOV
(DPTR) ← #data16

MOVC A,@A+<base–reg>

Function: Move code byte

Description: Loads the accumulator with a code byte or constant from program memory. The address of the byte fetched is the sum of the original unsigned 8-bit accumulator contents and the contents of a 16-bit base register, which may be the 16 LSBs of the data pointer or PC. In the latter case, the PC is incremented to the address of the following instruction before being added with the accumulator; otherwise the base register is not altered. Sixteen-bit addition is performed.

Flags:

CY	AC	OV	N	Z
—	—	—	—	—

Example: The accumulator contains a number between 0 and 3. The following instruction sequence translates the value in the accumulator to one of four values defined by the DB (define byte) directive.

```
RELPC:  INC     A
        MOVC    A,@A+PC
        RET
        DB      66H
        DB      77H
        DB      88H
        DB      99H
```

If the subroutine is called with the accumulator equal to 01H, it returns with 77H in the accumulator. The INC A before the MOVC instruction is needed to "get around" the RET instruction above the table. If several bytes of code separated the MOVC from the table, the corresponding number would be added to the accumulator instead.

Variations

MOVC A,@A+PC

	Binary Mode	Source Mode
Bytes:	1	1
States:	6	6

[Encoding]	1 0 0 0	0 0 1 1

Hex Code in: **Binary Mode = [Encoding]**
Source Mode = [Encoding]

Operation: MOVC
(PC) ← (PC) + 1
(A) ← ((A) + (PC))

MOVC A,@A+DPTR

	Binary Mode	Source Mode
Bytes:	1	1
States:	6	6

[Encoding]	1 0 0 1	0 0 1 1

Hex Code in: **Binary Mode = [Encoding]**
Source Mode = [Encoding]

Operation: MOVC
(A) ← ((A) + (DPTR))

MOVH DRk,#data16

Function: Move immediate 16-bit data to the high word of a dword (double-word) register

Description: Moves 16-bit immediate data to the high word of a dword (32-bit) register. The low word of the dword register is unchanged.

Flags:

CY	AC	OV	N	Z
—	—	—	—	—

Example: The dword register DRk contains 5566 7788H. After the instruction

MOVH DRk,#1122H

executes, DRk contains 1122 7788H.

Variations

MOVH DRk,#data16

	Binary Mode	Source Mode
Bytes:	5	4
States:	3	2

[Encoding]

0 1 1 1	1 0 1 0	u u u u	1 1 0 0	#data hi	#data low

Hex Code in: **Binary Mode = [A5][Encoding]**
Source Mode = [Encoding]

Operation: MOVH
(DRk).31:16 ← #data16

MOVS WRj,Rm

Function: Move 8-bit register to 16-bit register with sign extension

Description: Moves the contents of an 8-bit register to the low byte of a 16-bit register. The high byte of the 16-bit register is filled with the sign extension, which is obtained from the MSB of the 8-bit source register.

Flags:

CY	AC	OV	N	Z
—	—	—	—	—

Example: Eight-bit register Rm contains 055H (01010101B) and the 16-bit register WRj contains 0FFFFH (11111111 11111111B). The instruction

MOVS WRj,Rm

moves the contents of register Rm (01010101B) to register WRj (i.e., WRj contains 00000000 01010101B).

Variations

MOVS WRj,Rm

	Binary Mode	Source Mode
Bytes:	3	2
States:	2	1

[Encoding]	0 0 0 1	1 0 1 0	t t t t	s s s s

Hex Code in: **Binary Mode = [A5][Encoding]**
Source Mode = [Encoding]

Operation: MOVS
(WRj).7–0 ← (Rm).7–0
(WRj).15–8 ← MSB

MOVX <dest>,<src>

Function: Move external

Description: Transfers data between the accumulator and a byte in external data RAM. There are two types of instructions. One provides an 8-bit indirect address to external data RAM; the second provides a 16-bit indirect address to external data RAM.

In the first type of MOVX instruction, the contents of R0 or R1 in the current register bank provides an 8-bit address on port 0. Eight bits are sufficient for external I/O expansion decoding or for a relatively small RAM array. For larger arrays, any port pins can be used to output higher address bits. These pins would be controlled by an output instruction preceding the MOVX.

In the second type of MOVX instruction, the data pointer generates a 16-bit address. Port 2 outputs the upper eight address bits (from DPH) while port 0 outputs the lower eight address bits (from DPL).

For both types of moves in nonpage mode, the data is multiplexed with the lower address bits on port 0. In page mode, the data is multiplexed with the contents of P2 on port 2 (8-bit address) or with the upper address bits on port 2 (16-bit address).

It is possible in some situations to mix the two MOVX types. A large RAM array with its upper address lines driven by P2 can be addressed via the data pointer, or with code to output upper address bits to P2 followed by a MOVX instruction using R0 or R1.

Flags:

CY	AC	OV	N	Z
—	—	—	—	—

Example: The 8X930A*x* controller is operating in nonpage mode. An external 256-byte RAM using multiplexed address/data lines (e.g., an Intel 8155 RAM/I/O/Timer) is connected to port 0. Port 3 provides control lines for the external RAM. ports 1 and 2 are used for normal I/O. R0 and R1 contain 12H and 34H. Location 34H of the external RAM contains 56H. After executing the instruction sequence

```
MOVX A,@R1
MOVX @R0,A
```

the accumulator and external RAM location 12H contain 56H.

Variations

MOVX A,@DPTR

	Binary Mode	Source Mode
Bytes:	1	1
States:	5	5

[Encoding]	1 1 1 0	0 0 0 0

Hex Code in: **Binary Mode = [Encoding]**
Source Mode = [Encoding]

Operation: MOVX
(A) ← ((DPTR))

MOVX A,@Ri

	Binary Mode	Source Mode
Bytes:	1	1
States:	3	3

[Encoding]	1 1 1 0	0 0 1 i

Hex Code in: **Binary Mode = [Encoding]**
Source Mode = [A5][Encoding]

Operation: MOVX
(A) ← ((Ri))

MOVX @DPTR,A

	Binary Mode	Source Mode
Bytes:	1	1
States:	5	5

[Encoding]	1 1 1 1	0 0 0 0

Hex Code in: **Binary Mode = [Encoding]**
Source Mode = [Encoding]

Operation: MOVX
((DPTR)) ← (A)

MOVX @Ri,A

	Binary Mode	Source Mode
Bytes:	1	1
States:	4	4

[Encoding]	1 1 1 1	0 0 1 i

Hex Code in: **Binary Mode = [Encoding]**
Source Mode = [A5][Encoding]

Operation: MOVX
((Ri)) ← (A)

MOVZ WRj,Rm

Function: Move 8-bit register to 16-bit register with zero extension

Description: Moves the contents of an 8-bit register to the low byte of a 16-bit register. The upper byte of the 16-bit register is filled with zeros.

Flags:

CY	AC	OV	N	Z
—	—	—	—	—

Example: Eight-bit register Rm contains 055H (01010101B) and 16-bit register WRj contains 0FFFFH (11111111 11111111B). The instruction

MOVZ WRj,Rm

moves the contents of register Rm (01010101B) to register WRj. At the end of the operation, WRj contains 00000000 01010101B.

Variations

MOVZ WRj,Rm

	Binary Mode	Source Mode
Bytes:	3	2
States:	2	1

[Encoding]

0 0 0 0	1 0 1 0	t t t t	s s s s

Hex Code in: **Binary Mode = [A5][Encoding]**
Source Mode = [Encoding]

Operation: MOVZ
(WRj)7–0 ← (Rm)7–0
(WRj)15–8 ← 0

MUL <dest>,<src>

Function: Multiply

Description: Multiplies the unsigned integer in the source register with the unsigned integer in the destination register. Only register addressing is allowed.

For 8-bit operands, the result is 16 bits. The most significant byte of the result is stored in the low byte of the word where the destination register resides. The least significant byte is stored in the following byte register. The OV flag is set if the product is greater than 255 (0FFH); otherwise it is cleared.

For 16-bit operands, the result is 32 bits. The most significant word is stored in the low word of the dword where the destination register resides. The least significant word is stored in the following word register. In this operation, the OV flag is set if the product is greater than 0FFFFH, otherwise it is cleared. The CY flag is always cleared. The N flag is set when the MSB of the result is set. The Z flag is set when the result is zero.

Flags:

CY	AC	OV	N	Z
0	—	✓	✓	✓

Example: Register R1 contains 80 (50H or 10010000B) and register R0 contains 160 (0A0H or 10010000B). After executing the instruction

MUL R1,R0

which gives the product 12,800 (3200H), register R0 contains 32H (00110010B), register R1 contains 00H, the OV flag is set, and the CY flag is clear.

MUL Rmd,Rms

	Binary Mode	Source Mode
Bytes:	3	2
States:	6	5

[Encoding]

1 0 1 0	1 1 0 0	s s s s	S S S S

Hex Code in: **Binary Mode = [A5][Encoding]**
Source Mode = [Encoding]

Operation:
MUL (8-bit operands)
if <dest> md = 0, 2, 4, .., 14
Rmd ← high byte of the Rmd X Rms
Rmd+1 ← low byte of the Rmd X Rms
if <dest> md = 1, 3, 5, .., 15
Rmd–1 ← high byte of the Rmd X Rms
Rmd ← low byte of the Rmd X Rms

MUL WRjd,WRjs

	Binary Mode	Source Mode
Bytes:	3	2
States:	12	11

[Encoding]

1 0 1 0	1 1 0 1	t t t t	t t t t

Hex Code in: **Binary Mode = [A5][Encoding]**
Source Mode = [Encoding]

Operation:
MUL (16-bit operands)
if <dest> jd = 0, 4, 8, .., 28
WRjd ← high word of the WRjd X WRjs
WRjd+2 ← low word of the WRjd X WRjs
if <dest> jd = 2, 6, 10, .., 30
WRjd–2 ← high word of the WRjd X WRjs
WRjd ← low word of the WRjd X WRjs

MUL AB

Function: Multiply

Description: Multiplies the unsigned 8-bit integers in the accumulator and register B. The low byte of the 16-bit product is left in the accumulator, and the high byte is left in register B. If the product is greater than 255 (0FFH) the OV flag is set; otherwise it is clear. The CY flag is always clear.

Flags:

CY	AC	OV	N	Z
0	—	✓	✓	✓

Example: The accumulator contains 80 (50H) and register B contains 160 (0A0H). After executing the instruction

MUL AB

which gives the product 12,800 (3200H), register B contains 32H (00110010B), the accumulator contains 00H, the OV flag is set, and the CY flag is clear.

	Binary Mode	Source Mode
Bytes:	1	1
States:	5	5

[Encoding]	1 0 1 0	0 1 0 0

Hex Code in: **Binary Mode = [Encoding]**
Source Mode = [Encoding]

Operation: MUL
(A) ← low byte of (A) X (B)
(B) ← high byte of (A) X (B)

NOP

Function: No operation

Description: Execution continues at the following instruction. Affects the PC register only.

Flags:

CY	AC	OV	N	Z
—	—	—	—	—

Example: You want to produce a low-going output pulse on bit 7 of Port 2 that lasts exactly 11 states. A simple CLR-SETB sequence generates an eight-state pulse. (Each instruction requires four states to write to a port SFR.) You can insert three additional states (if no interrupts are enabled) with the following instruction sequence:

```
CLR   P2.7
NOP
NOP
NOP
SETB  P2.7
```

	Binary Mode	Source Mode
Bytes:	1	1
States:	1	1

[Encoding]	0 0 0 0	0 0 0 0

Hex Code in: **Binary Mode = [Encoding]**
Source Mode = [Encoding]

Operation: NOP
(PC) ← (PC) + 1

ORL <dest> <src>

Function: Logical-OR for byte variables

Description: Performs the bitwise logical-OR operation (V) between the specified variables, storing the results in the destination operand.

The destination operand can be a register, an accumulator or direct address.

The two operands allow twelve addressing mode combinations. When the destination is the accumulator, the source can be register, direct, register-indirect, or immediate addressing; when the destination is a direct address, the source can be the accumulator or immediate data. When the destination is register the source can be register, immediate, direct and indirect addressing.

Note: When this instruction is used to modify an output port, the value used as the original port data is read from the output data latch, not the input pins.

Flags:

CY	AC	OV	N	Z
—	—	—	✓	✓

Example: The accumulator contains 0C3H (11000011B) and R0 contains 55H (01010101B). After executing the instruction

ORL A,R0

the accumulator contains 0D7H (11010111B).

When the destination is a directly addressed byte, the instruction can set combinations of bits in any RAM location or hardware register. The pattern of bits to be set is determined by a mask byte, which may be a constant data value in the instruction or a variable computed in the accumulator at run time. After executing the instruction

ORL P1,#00110010B

sets bits 5, 4, and 1 of output Port 1.

ORL dir8,A

	Binary Mode	Source Mode
Bytes:	2	2
States:	2†	2†

†If this instruction addresses a port (P*x*, *x* = 0–3), add 2 states.

[Encoding]	0 1 0 0	0 0 1 0	direct addr

Hex Code in: **Binary Mode = [Encoding]**
Source Mode = [Encoding]

Operation: ORL
(dir8) ← (dir8) V (A)

ORL dir8,#data

	Binary Mode	Source Mode
Bytes:	3	3
States:	3†	3†

†If this instruction addresses a port (P*x*, *x* = 0–3), add 1 state.

[Encoding]	0 1 0 0	0 0 1 1	direct addr	immed. data

Hex Code in: **Binary Mode = [Encoding]**
Source Mode = [Encoding]

Operation: ORL
(dir8) ← (dir8) V #data

ORL A,#data

	Binary Mode	Source Mode
Bytes:	2	2
States:	1	1

[Encoding]	0 1 0 0	0 1 0 0	immed. data

Hex Code in: **Binary Mode = [Encoding]**
Source Mode = [Encoding]

Operation: ORL
(A) ← (A) V #data

ORL A,dir8

	Binary Mode	Source Mode
Bytes:	2	2
States:	1†	1†

†If this instruction addresses a port (P*x*, *x* = 0–3), add 1 state.

[Encoding]	0 1 0 0	0 1 0 1	direct addr

Hex Code in: **Binary Mode = [Encoding]**
Source Mode = [Encoding]

Operation: ORL
(A) ← (A) V (dir8)

ORL A,@Ri

	Binary Mode	Source Mode
Bytes:	1	2
States:	2	3

[Encoding]	0 1 0 0	0 1 1 i

Hex Code in: **Binary Mode = [Encoding]**
Source Mode = [A5][Encoding]

Operation: ORL
(A) ← (A) V ((Ri))

ORL A,Rn

	Binary Mode	Source Mode
Bytes:	1	2
States:	1	2

[Encoding]	0 1 0 0	1 r r r

Hex Code in: **Binary Mode = [Encoding]**
Source Mode = [A5][Encoding]

Operation: ORL
(A) ← (A) V (Rn)

ORL Rmd,Rms

	Binary Mode	Source Mode
Bytes:	3	2
States:	2	1

[Encoding]	0 1 0 0	1 1 0 0	s s s s	S S S S

Hex Code in: **Binary Mode = [A5][Encoding]**
Source Mode = [Encoding]

Operation: ORL
(Rmd) ← (Rmd) V (Rms)

ORL WRjd,WRjs

	Binary Mode	Source Mode
Bytes:	3	2
States:	3	2

[Encoding]

0 1 0 0	1 1 0 1	t t t t	T T T T

Hex Code in: **Binary Mode = [A5][Encoding]**
Source Mode = [Encoding]

Operation: ORL
(WRjd)←(WRjd) V (WRjs)

ORL Rm,#data

	Binary Mode	Source Mode
Bytes:	4	3
States:	3	2

[Encoding]

0 1 0 0	1 1 1 0	s s s s	0 0 0 0	#data

Hex Code in **Binary Mode = [A5][Encoding]**
Source Mode = [Encoding]

Operation: ORL
(Rm) ← (Rm) V #data

ORL WRj,#data16

	Binary Mode	Source Mode
Bytes:	5	4
States:	**4**	**3**

[Encoding]

0 1 0 0	1 1 1 0	t t t t	0 1 0 0	#data hi	#data low

Hex Code in: **Binary Mode = [A5][Encoding]**
Source Mode = [Encoding]

Operation: ORL
(WRj) ← (WRj) V #data16

ORL Rm,dir8

	Binary Mode	Source Mode
Bytes:	4	3
States:	3†	2†

†If this instruction addresses a port (P*x*, *x* = 0–3), add 1 state.

[Encoding]	0 1 0 0	1 1 1 0	s s s s	0 0 0 1	direct addr

Hex Code in: **Binary Mode = [A5][Encoding]**
Source Mode = [Encoding]

Operation: ORL
(Rm) ← (Rm) V (dir8)

ORL WRj,dir8

	Binary Mode	Source Mode
Bytes:	4	3
States:	4	3

[Encoding]	0 1 0 0	1 1 1 1	t t t t	0101	direct addr

Hex Code in: **Binary Mode = [A5][Encoding]**
Source Mode = [Encoding]

Operation: ORL
(WRj) ← (WRj) V (dir8)

ORL Rm,dir16

	Binary Mode	Source Mode
Bytes:	5	4
States:	3	2

[Encoding]

0 1 0 0	1 1 1 0	s s s s	0 0 1 1	direct addr	direct addr

Hex Code in: **Binary Mode = [A5][Encoding]**
Source Mode = [Encoding]

Operation: ORL
(Rm) ← (Rm) V (dir16)

ORL WRj,dir16

	Binary Mode	Source Mode
Bytes:	5	4
States:	4	3

[Encoding]

0 1 0 0	1 1 1 0	t t t t	0 1 1 1	direct addr	direct addr

Hex Code in: **Binary Mode = [A5][Encoding]**
Source Mode = [Encoding]

Operation: ORL
(WRj) ← (WRj) V (dir16)

ORL Rm,@WRj

	Binary Mode	Source Mode
Bytes:	4	3
States:	3	2

[Encoding]

0 1 0 0	1 1 1 0	t t t t	1 0 0 1	s s s s	0 0 0 0

Hex Code in: **Binary Mode = [A5][Encoding]**
Source Mode = [Encoding]

Operation: ORL
(Rm) ← (Rm) V ((WRj))

ORL Rm,@DRk

	Binary Mode	Source Mode
Bytes:	4	3
States:	4	3

[Encoding]

0 1 0 0	1 1 1 0	u u u u	1 0 1 1	s s s s	0 0 0 0

Hex Code in: **Binary Mode = [A5][Encoding]**
Source Mode = [Encoding]

Operation: ORL
(Rm) ← (Rm) V ((DRk))

ORL CY,<src–bit>

Function: Logical-OR for bit variables

Description: Sets the CY flag if the Boolean value is a logical 1; leaves the CY flag in its current state otherwise . A slash ("/") preceding the operand in the assembly language indicates that the logical complement of the addressed bit is used as the source value, but the source bit itself is not affected.

Flags:

CY	AC	OV	N	Z
✓	—	—	—	—

Example: Set the CY flag if and only if P1.0 = 1, ACC. 7 = 1, or OV = 0:

```
MOV CY,P1.0        ;LOAD CARRY WITH INPUT PIN P10
ORL CY,ACC.7 ;OR CARRY WITH THE ACC. BIT 7
ORL CY,/OV         ;OR CARRY WITH THE INVERSE OF OV.
```

Variations

ORL CY,bit51

	Binary Mode	Source Mode
Bytes:	2	2
States:	1†	1†

†If this instruction addresses a port (P*x*, *x* = 0–3), add 1 state.

[Encoding]

0 1 1 1	0 0 1 0	bit addr

Hex Code in: **Binary Mode = [Encoding]**
Source Mode = [Encoding]

Operation: ORL
(CY) ← (CY) V (bit51)

ORL CY,/bit51

	Binary Mode	Source Mode
Bytes:	2	2
States:	1†	1†

†If this instruction addresses a port (P*x*, *x* = 0–3), add 1 state.

[Encoding]

1 0 1 0	0 0 0 0	bit addr

Hex Code in: **Binary Mode = [Encoding]**
Source Mode = [Encoding]

Operation: ORL
(CY) ← (CY) V¬ (bit51)

ORL CY,bit

	Binary Mode	Source Mode
Bytes:	4	3
States:	3†	2†

†If this instruction addresses a port (P*x*, *x* = 0–3), add 1 state.

[Encoding]

1 0 1 0	1 0 0 1	0 1 1 1	0	y y y	direct addr

Hex Code in: **Binary Mode = [A5][Encoding]**
Source Mode = [Encoding]

Operation: ORL
(CY) ← (CY) V (bit)

ORL CY,/bit

	Binary Mode	Source Mode
Bytes:	4	3
States:	3†	2†

†If this instruction addresses a port (P*x*, *x* = 0–3), add 1 state.

[Encoding]

1 0 1 0	1 0 0 1	1 1 1 0	0	y y y	direct addr

Hex Code in: **Binary Mode = [A5][Encoding]**
Source Mode = [Encoding]

Operation: ORL
(CY) ← (CY) V ¬ (bit)

POP <src>
Function: Pop from stack

Description: Reads the contents of the on-chip RAM location addressed by the stack pointer, then decrements the stack pointer by one. The value read at the original RAM location is transferred to the newly addressed location, which can be 8-bit or 16-bit.

Flags:

CY	AC	OV	N	Z
—	—	—	—	—

Example: The stack pointer contains 32H and on-chip RAM locations 30H through 32H contain 01H, 23H, and 20H, respectively. After executing the instruction sequence

POP DPH
POP DPL

the stack pointer contains 30H and the data pointer contains 0123H. After executing the instruction

POP SP

the stack pointer contains 20H. Note that in this special case the stack pointer was decremented to 2FH before it was loaded with the value popped (20H).

Variations

POP dir8

	Binary Mode	Source Mode
Bytes:	2	2
States:	3	3

[Encoding]

1 1 0 1	0 0 0 0	direct addr

Hex Code in: **Binary Mode = [Encoding]**
Source Mode = [Encoding]

Operation: POP
(dir8) ← ((SP))
(SP) ← (SP) – 1

POP Rm

Bytes:	3	2		
States:	3	2		
[Encoding]	1 1 0 1	1 0 1 0	s s s s	1 0 0 0

Hex Code in: **Binary Mode = [A5][Encoding]**
Source Mode = [Encoding]

Operation: POP
(Rm) ← ((SP))
(SP) ← (SP) – 1

POP WRj

	Binary Mode	**Source Mode**		
Bytes:	3	2		
States:	5	4		
[Encoding]	1 1 0 1	1 0 1 0	t t t t	1 0 0 1

Hex Code in: **Binary Mode = [A5][Encoding]**
Source Mode = [Encoding]

Operation: POP
(SP) ← (SP) – 1
(WRj) ← ((SP))
(SP) ← (SP) – 1

POP DRk

	Binary Mode	**Source Mode**		
Bytes:	3	2		
States:	10	9		
[Encoding]	1 1 0 1	1 0 1 0	u u u u	1 0 1 1

Hex Code in: **Binary Mode = [A5][Encoding]**
Source Mode = [Encoding]

Operation: POP
(SP) ← (SP) – 3
(DRk) ← ((SP))
(SP) ← (SP) – 1

PUSH <dest>
Function: Push onto stack

Description: Increments the stack pointer by one. The contents of the specified variable are then copied into the on-chip RAM location addressed by the stack pointer.

Flags:

CY	AC	OV	N	Z
—	—	—	—	—

Example: On entering an interrupt routine, the stack pointer contains 09H and the data pointer contains 0123H. After executing the instruction sequence

```
PUSH DPL
PUSH DPH
```

the stack pointer contains 0BH and on-chip RAM locations 0AH and 0BH contain 01H and 23H, respectively.

Variations

PUSH dir8

	Binary Mode	Source Mode
Bytes:	2	2
States:	4	4

[Encoding]

1 1 0 0	0 0 0 0	direct addr

Hex Code in: **Binary Mode = [Encoding]**
Source Mode = [Encoding]

Operation: PUSH
(SP) ← (SP) + 1
((SP)) ← (dir8)

PUSH #data

	Binary Mode	Source Mode
Bytes:	4	3
States:	4	3

[Encoding]

1 1 0 0	1 0 1 0	0 0 0 0	0 0 1 0	#data

Hex Code in: **Binary Mode = [Encoding]**
Source Mode = [Encoding]

Operation: PUSH
(SP) ← (SP) + 1
((SP)) ← #data

PUSH #data16

	Binary Mode	Source Mode
Bytes:	5	4
States:	6	5

[Encoding]

1 1 0 0	1 0 1 0	0 0 0 0	0 1 1 0	#data hi	#data lo

Hex Code in: **Binary Mode = [A5][Encoding]**
Source Mode = [Encoding]

Operation: PUSH
(SP) ← (SP) + 2
((SP)) ← MSB of #data16
((SP)) ← LSB of #data16

PUSH Rm

	Binary Mode	Source Mode
Bytes:	3	2
States:	4	3

[Encoding]	1 1 0 0	1 0 1 0	s s s s	1 0 0 0

Hex Code in: **Binary Mode = [A5][Encoding]**
Source Mode = [Encoding]

Operation: PUSH
(SP) ← (SP) + 1
((SP)) ← (Rm)

PUSH WRj

	Binary Mode	Source Mode
Bytes:	3	2
States:	5	4

[Encoding]	1 1 0 0	1 0 1 0	t t t t	1 0 0 1

Hex Code in: **Binary Mode = [A5][Encoding]**
Source Mode = [Encoding]

Operation: PUSH
(SP) ← (SP) + 1
((SP)) ← (WRj)
(SP) ← (SP) + 1

PUSH DRk

	Binary Mode	Source Mode
Bytes:	3	2
States:	9	8

[Encoding]	1 1 0 0	1 0 1 0	u u u u	1 0 1 1

Hex Code in: **Binary Mode = [A5][Encoding]**
Source Mode = [Encoding]

Operation: PUSH
(SP) ← (SP) + 1
((SP)) ← (DRk)
(SP) ← (SP) + 3

RET
Function: Return from subroutine

Description: Pops the high and low bytes of the PC successively from the stack, decrementing the stack pointer by two. Program execution continues at the resulting address, which normally is the instruction immediately following ACALL or LCALL.

Flags:

CY	AC	OV	N	Z
—	—	—	—	—

Example: The stack pointer contains 0BH and on-chip RAM locations 0AH and 0BH contain 01H and 23H, respectively. After executing the instruction,

RET

the stack pointer contains 09H and program execution continues at location 0123H.

	Binary Mode	Source Mode
Bytes:	1	1
States:	7	7

[Encoding]		
	0 0 1 0	0 0 1 0

Hex Code in: **Binary Mode = [Encoding]**
Source Mode = [Encoding]

Operation:
RET
(PC).15:8 ← ((SP))
(SP) ← (SP) – 1
(PC).7:0 ← ((SP))
(SP) ← (SP) – 1

RETI

Function: Return from interrupt

Description: This instruction pops two or four bytes from the stack, depending on the INTR bit in the CONFIG1 register.

If INTR = 0, RETI pops the high and low bytes of the PC successively from the stack and uses them as the 16-bit return address in region FF:. The stack pointer is decremented by two. No other registers are affected, and neither PSW nor PSW1 is automatically restored to its pre-interrupt status.

If INTR = 1, RETI pops four bytes from the stack: PSW1 and the three bytes of the PC. The three bytes of the PC are the return address, which can be anywhere in the 16-Mbyte memory space. The stack pointer is decremented by four. PSW1 is restored to its pre-interrupt status, but PSW is **not** restored to its pre-interrupt status. No other registers are affected.

For either value of INTR, hardware restores the interrupt logic to accept additional interrupts at the same priority level as the one just processed. Program execution continues at the return address, which normally is the instruction immediately after the point at which the interrupt request was detected. If an interrupt of the same or lower priority is pending when the RETI instruction is executed, that one instruction is executed before the pending interrupt is processed.

Flags:

CY	AC	OV	N	Z
—	—	—	—	—

Example: INTR = 0. The stack pointer contains 0BH. An interrupt was detected during the instruction ending at location 0122H. On-chip RAM locations 0AH and 0BH contain 01H and 23H, respectively. After executing the instruction

RETI

the stack pointer contains 09H and program execution continues at location 0123H.

	Binary Mode	Source Mode
Bytes:	1	1
States (INTR = 0):	9	9
States (INTR = 1):	12	12

[Encoding]	0 0 1 1	0 0 1 0

Hex Code in: **Binary Mode = [Encoding]**
Source Mode = [Encoding]

Operation for INTR = 0:

RETI
(PC).15:8 ←((SP))
(SP) ← (SP) – 1
(PC).7:0 ¨ ((SP))
(SP) ←(SP) – 1

Operation for INTR = 1:

RETI
(PC).15:8 ← ((SP))
(SP) ← (SP) – 1
PC).7:0 ← ((SP))
(SP) ← (SP) – 1
(PC).23:16 ← ((SP))
(SP) ← (SP) – 1
PSW1 ← ((SP))
(SP) ← (SP) – 1

RL A

Function: Rotate accumulator left

Description: Rotates the eight bits in the accumulator one bit to the left. Bit 7 is rotated into the bit 0 position.

Flags:

CY	AC	OV	N	Z
—	—	—	✓	✓

Example: The accumulator contains 0C5H (11000101B). After executing the instruction,

RL A

the accumulator contains 8BH (10001011B); the CY flag is unaffected.

	Binary Mode	Source Mode
Bytes:	1	1
States:	1	1
[Encoding]	0 0 1 0	0 0 1 1

Hex Code in: **Binary Mode = [Encoding]**
Source Mode = [Encoding]

Operation: RL
(A).a+1 ← (A).a
(A).0 ← (A).7

RLC A

Function: Rotate accumulator left through the carry flag

Description: Rotates the eight bits in the accumulator and the CY flag one bit to the left. Bit 7 moves into the CY flag position and the original state of the CY flag moves into bit 0 position.

Flags:

CY	AC	OV	N	Z
✓	—	—	✓	✓

Example: The accumulator contains 0C5H (11000101B) and the CY flag is clear. After executing the instruction

RLC A

the accumulator contains 8AH (10001010B) and the CY flag is set.

	Binary Mode	Source Mode
Bytes:	1	1
States:	1	1
[Encoding]	0 0 1 1	0 0 1 1

Hex Code in: **Binary Mode = [Encoding]**
Source Mode = [Encoding]

Operation: RLC
(A).a+1 ← (A).a
(A).0 ← (CY)
(CY) ← (A).7

RR A

Function: Rotate accumulator right

Description: Rotates the 8 or 16 bits in the accumulator one bit to the right. Bit 0 is moved into the bit 7 or 15 position.

Flags:

CY	AC	OV	N	Z
—	—	—	✓	✓

Example: The accumulator contains 0C5H (11000101B). After executing the instruction

RR A

the accumulator contains 0E2H (11100010B) and the CY flag is unaffected.

	Binary Mode	Source Mode
Bytes:	1	1
States:	1	1

[Encoding]		
	0 0 0 0	0 0 1 1

Hex Code in: **Binary Mode = [Encoding]**
Source Mode = [Encoding]

Operation: RR
(A).a ← (A).a+1
(A).7 ← (A) .0

RRC A

Function: Rotate accumulator right through carry flag

Description: Rotates the eight bits in the accumulator and the CY flag one bit to the right. Bit 0 moves into the CY flag position; the original value of the CY flag moves into the bit 7 position.

Flags:

CY	AC	OV	N	Z
✓	—	—	✓	✓

Example: The accumulator contains 0C5H (11000101B) and the CY flag is clear. After executing the instruction

RRC A

the accumulator contains 62 (01100010B) and the CY flag is set.

	Binary Mode	Source Mode
Bytes:	1	1
States:	1	1

[Encoding]		
	0 0 0 1	0 0 1 1

Hex Code in: **Binary Mode = [Encoding]**
Source Mode = [Encoding]

Operation: RRC
(A).a ← (A).a+1
(A).7 ← (CY)
(CY) ← (A).0

SETB <bit>

Function: Set bit

Description: Sets the specified bit to one. SETB can operate on the CY flag or any directly addressable bit.

Flags: No flags are affected except the CY flag for instruction with CY as the operand.

CY	AC	OV	N	Z
✓	—	—	—	—

Example: The CY flag is clear and output Port 1 contains 34H (00110100B). After executing the instruction sequence

```
SETB CY
SETB P1.0
```

the CY flag is set and output Port 1 contains 35H (00110101B).

SETB bit51

	Binary Mode	Source Mode
Bytes:	2	2
States:	2†	2†

†If this instruction addresses a port (P*x*, *x* = 0–3), add 2 states.

[Encoding]

1 1 0 1	0 0 1 0	bit addr

Hex Code in: **Binary Mode = [Encoding]**
Source Mode = [Encoding]

Operation: SETB
(bit51) ← 1

SETB CY

	Binary Mode	Source Mode
Bytes:	1	1
States:	1	1

[Encoding]

1 1 0 1	0 0 1 1

Hex Code in: **Binary Mode = [Encoding]**
Source Mode = [Encoding]

Operation: SETB
(CY) ← 1

SETB bit

	Binary Mode	Source Mode
Bytes:	4	3
States:	4†	3†

†If this instruction addresses a port (P*x*, *x* = 0–3), add 2 states.

[Encoding]

1 0 1 0	1 0 0 1	1 1 0 1	0	y y y	direct addr

Hex Code in: **Binary Mode = [A5][Encoding]**
Source Mode = [Encoding]

Operation: SETB
(bit) ← 1

SJMP rel

Function: Short jump

Description: Program control branches unconditionally to the specified address. The branch destination is computed by adding the signed displacement in the second instruction byte to the PC, after incrementing the PC twice. Therefore, the range of destinations allowed is from 128 bytes preceding this instruction to 127 bytes following it.

Flags:

CY	AC	OV	N	Z
—	—	—	—	—

Example: The label "RELADR" is assigned to an instruction at program memory location 0123H. The instruction

SJMP RELADR

assembles into location 0100H. After executing the instruction, the PC contains 0123H.

(Note: In the above example, the instruction following SJMP is located at 102H. Therefore, the displacement byte of the instruction is the relative offset (0123H–0102H) = 21H. Put another way, an SJMP with a displacement of 0FEH would be a one-instruction infinite loop.)

	Binary Mode	Source Mode
Bytes:	2	2
States:	4	4

[Encoding]	1 0 0 0	0 0 0 0	rel. addr

Hex Code in: **Binary Mode = [Encoding]**
Source Mode = [Encoding]

Operation: SJMP
(PC) ← (PC) + 2
(PC) ← (PC) + rel

SLL <src>

Function: Shift logical left by 1 bit

Description: Shifts the specified variable to the left by 1 bit, replacing the LSB with zero. The bit shifted out (MSB) is stored in the CY bit.

Flags:

CY	AC	OV	N	Z
✓	—	—	✓	✓

Example: Register 1 contains 0C5H (11000101B). After executing the instruction

SLL register 1

Register 1 contains 8AH (10001010B) and CY = 1.

Variations

SLL Rm

	Binary Mode	**Source Mode**
Bytes:	3	2
States:	2	1

[Encoding]	0 0 1 1	1 1 1 0	s s s s	0 0 0 0

Hex Code in: **Binary Mode = [A5][Encoding]**
Source Mode = [Encoding]

Operation: SLL
(Rm).a+1 ← (Rm).a
(Rm).0 ← 0
CY ← (Rm).7

SLL WRj

	Binary Mode	Source Mode
Bytes:	3	2
States:	2	1

[Encoding]	0 0 1 1	1 1 1 0	t t t t	0 1 0 0

Hex Code in: **Binary Mode = [A5][Encoding]**
Source Mode = [Encoding]

Operation: SLL
WRj).b+1 ← (WRj).b
(WRj).0 ← 0
CY← (WRj).15

SRA <src>

Function: Shift arithmetic right by 1 bit

Description: Shifts the specified variable to the arithmetic right by 1 bit. The MSB is unchanged. The bit shifted out (LSB) is stored in the CY bit.

Flags:

CY	AC	OV	N	Z
✓	—	—	✓	✓

Example: Register 1 contains 0C5H (11000101B). After executing the instruction

SRA register 1

Register 1 contains 0E2H (11100010B) and CY = 1.

Variations

SRA Rm

	Binary Mode	Source Mode
Bytes:	3	2
States:	2	1

[Encoding]	0 0 0 0	1 1 1 0	s s s s	0 0 0 0

Hex Code in: **Binary Mode = [A5][Encoding]**
Source Mode = [Encoding]

Operation: SRA
(Rm).7 ← (Rm).7
(Rm).a ← (Rm).a+1
CY← (Rm).0

SRA WRj

	Binary Mode	Source Mode
Bytes:	3	2
States:	2	1

[Encoding]	0 0 0 0	1 1 1 0	t t t t	0 1 0 0

Hex Code in: **Binary Mode = [A5][Encoding]**
Source Mode = [Encoding]

Operation: SRA
(WRj).15 ← (WRj).15
(WRj).b ← (WRj).b+1
CY← (WRj).0

SRL <src>

Function: Shift logical right by 1 bit

Description: SRL shifts the specified variable to the right by 1 bit, replacing the MSB with a zero. The bit shifted out (LSB) is stored in the CY bit.

Flags:

CY	AC	OV	N	Z
✓	—	—	✓	✓

Example: Register 1 contains 0C5H (11000101B). After executing the instruction

SRL register 1

Register 1 contains 62H (01100010B) and CY = 1.

SRL Rm

	Binary Mode	Source Mode
Bytes:	3	2
States:	2	1

[Encoding]	0 0 0 1	1 1 1 0	s s s s	0 0 0 0

Hex Code in: **Binary Mode = [A5][Encoding]**
Source Mode = [Encoding]

Operation: SRL
(Rm).7 ← 0
(Rm).a ← (Rm).a+1
CY← (Rm).0

SRL WRj

	Binary Mode	Source Mode
Bytes:	3	2
States:	2	1

[Encoding]	0 0 0 1	1 1 1 0	t t t t	0 1 0 0

Hex Code in: **Binary Mode = [A5][Encoding]**
Source Mode = [Encoding]

Operation: SRL
(WRj).15 ← 0
(WRj).b ← (WRj).b+1
CY← (WRj).0

SUB <dest>,<src>

Function: Subtract

Description: Subtracts the specified variable from the destination operand, leaving the result in the destination operand. SUB sets the CY (borrow) flag if a borrow is needed for bit 7. Otherwise, CY is clear.

When subtracting signed integers, the OV flag indicates a negative number produced when a negative value is subtracted from a positive value, or a positive result when a positive number is subtracted from a negative number.

Bit 7 in this description refers to the most significant byte of the operand (8, 16, or 32 bit).

The source operand allows four addressing modes: immediate, indirect, register and direct.

Flags:

CY	AC	OV	N	Z
✓	✓†	✓	✓	✓

†For word and dword subtractions, AC is not affected.

Example: Register 1 contains 0C9H (11001001B) and register 0 contains 54H (01010100B). After executing the instruction

SUB R1,R0

register 1 contains 75H (01110101B), the CY and AC flags are clear, and the OV flag is set.

Variations

SUB Rmd,Rms

	Binary Mode	Source Mode
Bytes:	3	2
States:	2	1

[Encoding]	1 0 0 1	1 1 0 0	s s s s	S S S S

Hex Code in: **Binary Mode = [A5][Encoding]**
Source Mode = [Encoding]

Operation: SUB
(Rmd) ← (Rmd) – (Rms)

SUB WRjd,WRjs

	Binary Mode	Source Mode
Bytes:	3	2
States:	3	2

[Encoding]	1 0 0 1	1 1 0 1	t t t t	T T T T

Hex Code in: **Binary Mode = [A5][Encoding]**
Source Mode = [Encoding]

Operation: SUB
(WRjd) ← (WRjd) – (WRjs)

SUB DRkd,DRks

	Binary Mode	Source Mode
Bytes:	3	2
States:	5	4

[Encoding]	1 0 0 1	1 1 1 1	u u u u	U U U U

Hex Code in: **Binary Mode = [A5][Encoding]**
Source Mode = [Encoding]

Operation: SUB
(DRkd) ← (DRkd) – (DRks)

SUB Rm,#data

	Binary Mode	Source Mode
Bytes:	4	3
States:	3	2

[Encoding]

1 0 0 1	1 1 1 0	s s s s	0 0 0 0	#data

Hex Code in: **Binary Mode = [A5][Encoding]**
Source Mode = [Encoding]

Operation: SUB
(Rm) ← (Rm) – #data

SUB WRj,#data16

	Binary Mode	Source Mode
Bytes:	5	4
States:	4	3

[Encoding]

1 0 0 1	1 1 1 0	t t t t	0 1 0 0	#data hi	#data low

Hex Code in: **Binary Mode = [A5][Encoding]**
Source Mode = [Encoding]

Operation: SUB
(WRj) ← (WRj) – #data16

SUB DRk,#data16

	Binary Mode	Source Mode
Bytes:	5	4
States:	6	5

[Encoding]

1 0 0 1	1 1 1 0	u u u u	1 0 0 0	#data hi	#data low

Hex Code in: **Binary Mode = [A5][Encoding]**
Source Mode = [Encoding]

Operation: SUB
(DRk) ← (DRk) – #data16

SUB Rm,dir8

	Binary Mode	Source Mode
Bytes:	4	3
States:	3†	2†

†If this instruction addresses a port (P*x*, *x* = 0–3), add 1 state.

[Encoding]

1 0 0 1	1 1 1 0	s s s s	0 0 0 1	direct addr

Hex Code in: **Binary Mode = [A5][Encoding]**
Source Mode = [Encoding]

Operation: SUB
(Rm) ← (Rm) – (dir8)

SUB WRj,dir8

	Binary Mode	Source Mode
Bytes:	4	3
States:	4	3

[Encoding]

1 0 0 1	1 1 1 0	t t t t	0 1 0 1	direct addr

Hex Code in: **Binary Mode = [A5][Encoding]**
Source Mode = [Encoding]

Operation: SUB
(WRj) ← (WRj) – (dir8)

SUB Rm,dir16

	Binary Mode	Source Mode
Bytes:	5	4
States:	3	2

[Encoding]

1 0 0 1	1 1 1 0	s s s s	0 0 1 1	direct addr	direct addr

Hex Code in: **Binary Mode = [A5][Encoding]**
Source Mode = [Encoding]

Operation: SUB
(Rm) ← (Rm) – (dir16)

SUB WRj,dir16

	Binary Mode	Source Mode
Bytes:	5	4
States:	4	3

[Encoding]

1 0 0 1	1 1 1 0	t t t t	0 1 1 1	direct addr	direct addr

Hex Code in: **Binary Mode = [A5][Encoding]**
Source Mode = [Encoding]

Operation: SUB
(WRj) ← (WRj) – (dir16)

SUB Rm,@WRj

	Binary Mode	Source Mode
Bytes:	4	3
States:	3	2

[Encoding]

1 0 0 1	1 1 1 0	t t t t	1 0 0 1	s s s s	0 0 0 0

Hex Code in: **Binary Mode = [A5][Encoding]**
Source Mode = [Encoding]

Operation: SUB
(Rm) ← (Rm) – ((WRj))

SUB Rm,@DRk

	Binary Mode	Source Mode
Bytes:	4	3
States:	4	3

[Encoding]

1001	1110	uuuu	1011	ssss	0000

Hex Code in: **Binary Mode = [A5][Encoding]**
Source Mode = [Encoding]

Operation: SUB
(Rm) ← (Rm) – ((DRk))

SUBB A,<src–byte>

Function: Subtract with borrow

Description: SUBB subtracts the specified variable and the CY flag together from the accumulator, leaving the result in the accumulator. SUBB sets the CY (borrow) flag if a borrow is needed for bit 7, and clears CY otherwise. (If CY was set before executing a SUBB instruction, this indicates that a borrow was needed for the previous step in a multiple precision subtraction, so the CY flag is subtracted from the accumulator along with the source operand.) AC is set if a borrow is needed for bit 3, and cleared otherwise. OV is set if a borrow is needed into bit 6, but not into bit 7, or into bit 7, but not bit 6.

When subtracting signed integers the OV flag indicates a negative number produced when a negative value is subtracted from a positive value, or a positive result when a positive number is subtracted from a negative number.

Bit 6 and bit 7 in this description refer to the most significant byte of the operand (8, 16, or 32 bit).

The source operand allows four addressing modes: register, direct, register-indirect, or immediate.

Flags:

CY	AC	OV	N	Z
✓	✓	✓	✓	✓

Example: The accumulator contains 0C9H (11001001B), register 2 contains 54H (01010100B), and the CY flag is set. After executing the instruction

SUBB A,R2

the accumulator contains 74H (01110100B), the CY and AC flags are clear, and the OV flag is set.

Notice that 0C9H minus 54H is 75H. The difference between this and the above result is due to the CY (borrow) flag being set before the operation. If the state of the carry is not known before starting a single or multiple-precision subtraction, it should be explicitly cleared by a CLR CY instruction.

Variations

SUBB A,#data

	Binary Mode	Source Mode
Bytes:	2	2
States:	1	1

[Encoding]	1 0 0 1	0 1 0 0	immed. data

Hex Code in: **Binary Mode = [Encoding]**
Source Mode = [Encoding]

Operation: SUBB
(A) ← (A) – (CY) – #data

SUBB A,dir8

	Binary Mode	Source Mode
Bytes:	2	2
States:	1†	1†

†If this instruction addresses a port (P*x*, *x* = 0–3), add 1 state.

[Encoding]	1 0 0 1	0 1 0 1	direct addr

Hex Code in: **Binary Mode = [Encoding]**
Source Mode = [Encoding]

Operation: SUBB
(A) ← (A) – (CY) – (dir8)

SUBB A,@Ri

	Binary Mode	Source Mode
Bytes:	1	2
States:	2	3

[Encoding]	1 0 0 1	0 1 1 i

Hex Code in: **Binary Mode = [Encoding]**
Source Mode = [A5][Encoding]

Operation: SUBB
(A) ← (A) – (CY) – ((Ri))

SUBB A,Rn

	Binary Mode	Source Mode
Bytes:	1	2
States:	1	2

[Encoding]	1 0 0 1	1 r r r

Hex Code in: **Binary Mode = [Encoding]**
Source Mode = [A5][Encoding]

Operation: SUBB
(A) ← (A) – (CY) – (Rn)

SWAP A

Function: Swap nibbles within the accumulator

Description: Interchanges the low and high nibbles (4-bit fields) of the accumulator (bits 3–0 and bits 7–4). This operation can also be thought of as a 4-bit rotate instruction.

Flags:

CY	AC	OV	N	Z
—	—	—	—	—

Example: The accumulator contains 0C5H (11000101B). After executing the instruction

SWAP A

the accumulator contains 5CH (01011100B).

	Binary Mode	Source Mode
Bytes:	1	1
States:	2	2

[Encoding]	1 1 0 0	0 1 0 0

Hex Code in: **Binary Mode = [Encoding]**
Source Mode = [Encoding]

Operation: SWAP
(A).3:0 → ← (A).7:4

TRAP

Function: Causes interrupt call

Description: Causes an interrupt call that is vectored through location 0FF007BH. The operation of this instruction is not affected by the state of the interrupt enable flag in PSW0 and PSW1. Interrupt calls can not occur immediately following this instruction. This instruction is intended for use by Intel-provided development tools. These tools do not support user application of this instruction.

Flags:

CY	AC	OV	N	Z
—	—	—	—	—

Example: The instruction

TRAP

causes an interrupt call to location 0FF007BH during normal operation.

	Binary Mode	Source Mode
Bytes:	2	1
States (2 bytes):	11	10
States (4 bytes):	16	15

[Encoding]

1 0 1 1	1 0 0 1

Hex Code in: **Binary Mode = [A5][Encoding]**
Source Mode = [Encoding]

Operation:
TRAP
SP ← SP – 2
(SP) ← PC
PC ← (0FF007BH)

XCH A,<byte>

Function: Exchange accumulator with byte variable

Description: Loads the accumulator with the contents of the specified variable, at the same time writing the original accumulator contents to the specified variable. The source/destination operand can use register, direct, or register-indirect addressing.

Flags:

CY	AC	OV	N	Z
—	—	—	—	—

Example: R0 contains the address 20H, the accumulator contains 3FH (00111111B) and on-chip RAM location 20H contains 75H (01110101B). After executing the instruction

XCH A,@R0

RAM location 20H contains 3FH (00111111B) and the accumulator contains 75H (01110101B).

Variations

XCH A,dir8

	Binary Mode	Source Mode
Bytes:	2	2
States:	3†	3†

†If this instruction addresses a port (P*x*, *x* = 0–3), add 2 states.

[Encoding]

1 1 0 0	0 1 0 1	direct addr

Hex Code in: **Binary Mode = [Encoding]**
Source Mode = [Encoding]

Operation:
XCH
(A) → ← (dir8)

XCH A,@Ri

	Binary Mode	Source Mode
Bytes:	1	2
States:	4	5

[Encoding]

1 1 0 0	0 1 1 i

Hex Code in: **Binary Mode = [Encoding]**
Source Mode = [A5][Encoding]

Operation: XCH
(A) → ← ((Ri))

XCH A,Rn

	Binary Mode	Source Mode
Bytes:	1	2
States:	3	4

[Encoding]

1 1 0 0	1 r r r

Hex Code in: **Binary Mode = [Encoding]**
Source Mode = [A5][Encoding]

Operation: XCH
(A) → ← (Rn)

Variations

XCHD A,@Ri

Function: Exchange digit

Description: Exchanges the low nibble of the accumulator (bits 3-0), generally representing a hexadecimal or BCD digit, with that of the on-chip RAM location indirectly addressed by the specified register. Does not affect the high nibble (bits 7-4) of either register.

Flags:

CY	AC	OV	N	Z
—	—	—	—	—

Example: R0 contains the address 20H, the accumulator contains 36H (00110110B), and on-chip RAM location 20H contains 75H (01110101B). After executing the instruction

XCHD A,@R0

on-chip RAM location 20H contains 76H (01110110B) and 35H (00110101B) in the accumulator.

	Binary Mode	Source Mode
Bytes:	1	2
States:	4	5

[Encoding]

1 1 0 1	0 1 1 i

Hex Code in: **Binary Mode = [Encoding]**
Source Mode = [Encoding]

Operation: XCHD
(A).3:0 → ← ((Ri)).3:0

XRL <dest>,<src>

Function: Logical Exclusive-OR for byte variables

Description: Performs the bitwise logical Exclusive-OR operation (∇) between the specified variables, storing the results in the destination. The destination operand can be the accumulator, a register, or a direct address.

The two operands allow 12 addressing mode combinations. When the destination is the accumulator or a register, the source addressing can be register, direct, register-indirect, or immediate; when the destination is a direct address, the source can be the accumulator or immediate data.

(Note: When this instruction is used to modify an output port, the value used as the original port data is read from the output data latch, not the input pins.)

Flags:

CY	AC	OV	N	Z
—	—	—	✓	✓

Example: The accumulator contains 0C3H (11000011B) and R0 contains 0AAH (10101010B). After executing the instruction

XRL A,R0

the accumulator contains 69H (01101001B).

When the destination is a directly addressed byte, this instruction can complement combinations of bits in any RAM location or hardware register. The pattern of bits to be complemented is then determined by a mask byte, either a constant contained in the instruction or a variable computed in the accumulator at run time. The instruction

XRL P1,#00110001B

complements bits 5, 4, and 0 of output Port 1.

Variations

XRL dir8,A

	Binary Mode	Source Mode
Bytes:	2	2
States:	2†	2†

†If this instruction addresses a port (P*x*, *x* = 0–3), add 2 states.

[Encoding]

0 1 1 0	0 0 1 0	direct addr

Hex Code in: **Binary Mode = [Encoding]**
Source Mode = [Encoding]

Operation: XRL
(dir8) ← (dir8) ∀ (A)

XRL dir8,#data

	Binary Mode	Source Mode
Bytes:	3	3
States:	3†	3†

†If this instruction addresses a port (P*x*, *x* = 0–3), add 1 state.

[Encoding]	0 1 1 0	0 0 1 1	direct addr	immed. data

Hex Code in: **Binary Mode = [Encoding]**
Source Mode = [Encoding]

Operation: XRL
(dir8) ← (dir8) ∀ #data

XRL A,#data

	Binary Mode	Source Mode
Bytes:	2	2
States:	1	1

[Encoding]	0 1 1 0	0 1 0 0	immed. data

Hex Code in: **Binary Mode = [Encoding]**
Source Mode = [Encoding]

Operation: XRL
(A) ← (A) ∀ #data

XRL A,dir8

	Binary Mode	Source Mode
Bytes:	2	2
States:	1†	1†

†If this instruction addresses a port (P*x*, *x* = 0–3), add 1 state.

[Encoding]	0 1 1 0	0 1 0 1	direct addr

Hex Code in: **Binary Mode = [Encoding]**
Source Mode = [Encoding]

Operation: XRL
(A) ← (A) ∀ (dir8)

XRL A,@Ri

	Binary Mode	Source Mode
Bytes:	1	2
States:	2	3

[Encoding]	0 1 1 0	0 1 1 i

Hex Code in: **Binary Mode = [Encoding]**
Source Mode = [A5][Encoding]

Operation: XRL
(A) ← (A) ∀ ((Ri))

XRL A,Rn

	Binary Mode	Source Mode
Bytes:	1	2
States:	1	2

[Encoding]	0 1 1 0	1 r r r

Hex Code in: **Binary Mode = [Encoding]**
Source Mode = [A5][Encoding]

Operation: XRL
(A) ← (A) ∀ (Rn)

XRL Rmd,Rms

	Binary Mode	Source Mode
Bytes:	3	2
States:	2	1

[Encoding]	0 1 1 0	1 1 0 0	s s s s	S S S S

Hex Code in: **Binary Mode = [A5][Encoding]**
Source Mode = [Encoding]

Operation: XRL
(Rmd) ← (Rmd) ∀ (Rms)

XRL WRjd,WRjs

	Binary Mode	Source Mode
Bytes:	3	2
States:	3	2

[Encoding]	0 1 1 0	1 1 0 1	t t t t	T T T T

Hex Code in: **Binary Mode = [A5][Encoding]**
Source Mode = [Encoding]

Operation: XRL
(WRds) ← (WRjd) ∀ (WRjs)

XRL Rm,#data

	Binary Mode	Source Mode
Bytes:	4	3
States:	3	2

[Encoding]	0 1 1 0	1 1 1 0	s s s s	0 0 0 0	#data

Hex Code in: **Binary Mode = [A5][Encoding]**
Source Mode = [Encoding]

Operation: XRL
(Rm) ← (Rm) ∀ #data

XRL WRj,#data16

	Binary Mode	Source Mode
Bytes:	5	4
States:	4	3

[Encoding]

0 1 1 0	1 1 1 0	t t t t	0 1 0 0	#data hi	#data low

Hex Code in: **Binary Mode = [A5][Encoding]**
Source Mode = [Encoding]

Operation: XRL
(WRj) ← (WRj) ∀ #data16

XRL Rm,dir8

	Binary Mode	Source Mode
Bytes:	4	3
States:	3†	2†

†If this instruction addresses a port (P*x*, *x* = 0–3), add 1 state.

[Encoding]	0 1 1 0	1 1 1 0	s s s s	0 0 0 1	direct addr

Hex Code in: **Binary Mode = [A5][Encoding]**
Source Mode = [Encoding]

Operation: XRL
(Rm) ← (Rm) ∀ (dir8)

XRL WRj,dir8

	Binary Mode	Source Mode
Bytes:	4	3
States:	4	3

[Encoding]	0 1 1 0	1 1 1 0	t t t t	0 1 0 1	direct addr

Hex Code in: **Binary Mode = [A5][Encoding]**
Source Mode = [Encoding]

Operation: XRL
(WRj) ← (WRj) ∀ (dir8)

XRL Rm,dir16

	Binary Mode	Source Mode
Bytes:	5	4
States:	3	2

[Encoding]

0 1 1 0	1 1 1 0	s s s s	0 0 1 1	direct addr	dir8 addr

Hex Code in: **Binary Mode = [A5][Encoding]**
Source Mode = [Encoding]

Operation: XRL
(Rm) ← (Rm) ∀ (dir16)

\XRL WRj,dir16

	Binary Mode	Source Mode
Bytes:	5	4
States:	4	3

[Encoding]

0 1 1 0	1 1 1 0	t t t t	0 1 1 1	direct addr	direct addr

Hex Code in: **Binary Mode = [A5][Encoding]**
Source Mode = [Encoding]

Operation: XRL
(WRj) ← (WRj) ∀ (dir16)

XRL Rm,@Wrj

	Binary Mode	Source Mode
Bytes:	4	3
States:	3	2

[Encoding]

0 1 1 0	1 1 1 0	t t t t	1 0 0 1	s s s s	0 0 0 0

Hex Code in: **Binary Mode = [A5][Encoding]**
Source Mode = [Encoding]

Operation: XRL
(Rm) ← (Rm) ∀ ((WRj))

XRL Rm,@Drk

	Binary Mode	Source Mode
Bytes:	4	3
States:	4	3

[Encoding]

0 1 1 0	1 1 1 0	u u u u	1 0 1 1	s s s s	0 0 0 0

Hex Code In: **Binary Mode = [A5][Encoding]**
Source Mode = [Encoding]

Operation: XRL
(Rm) ← (Rm) ∀ ((DRk))

B

Signal Descriptions

APPENDIX B
SIGNAL DESCRIPTIONS

This appendix provides reference information for the external signals of the 8X930A*x*. Pin assignments for the 68-pin 8X930A*x* are shown in Figure B-1 and listed by functional category in Table B-1.

Table B-2 describes each of the signals. It lists the signal type (input, output, power, or ground) and the alternative functions of multi-function pins. Table B-3 shows how configuration bits RD1:0 (referred to in Table B-2) configure the A17, A16, RD#, WR# and PSEN# pins for external memory accesses. Table B-4 gives the USB rates and the 8X930A*x* operating frequencies as a function of PLLSEL2:0.

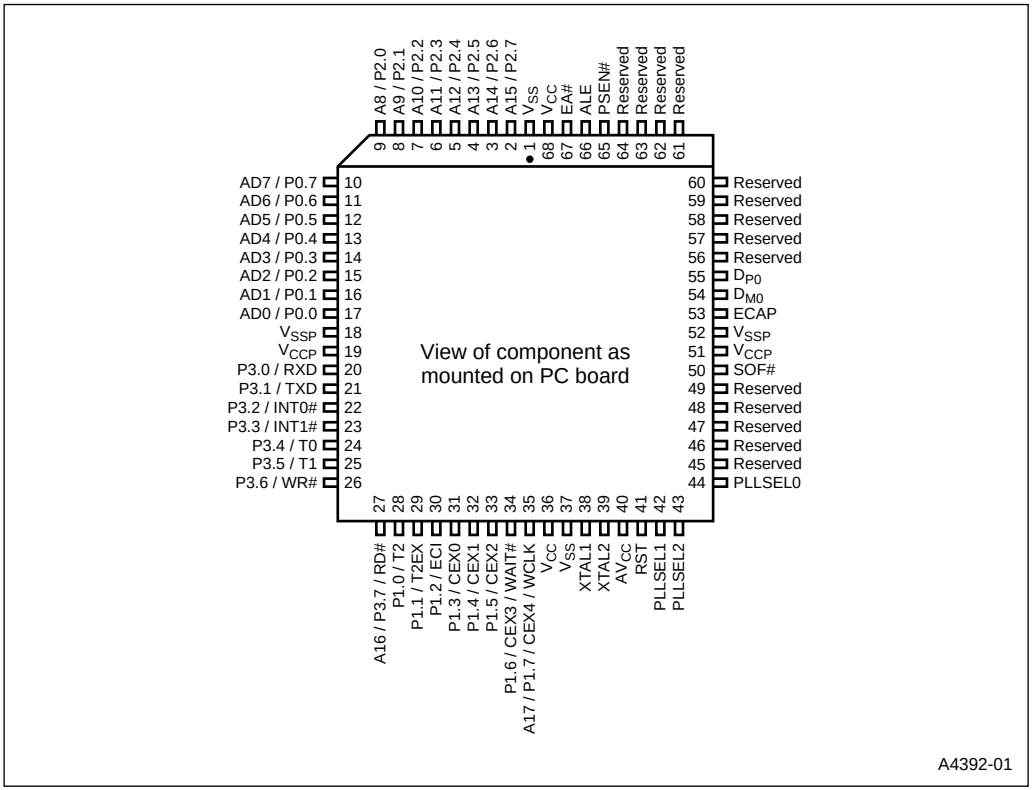

Figure B-1. 8X930A*x* 68-pin PLCC Package

Table B-1. 8X930A*x* Pin Assignments Arranged by Functional Categories

Address & Data	
Name	Pin
AD0/P0.0	17
AD1/P0.1	16
AD2/P0.2	15
AD3/P0.3	14
AD4/P0.4	13
AD5/P0.5	12
AD6/P0.6	11
AD7/P0.7	10
A8/P2.0	9
A9/P2.1	8
A10/P2.2	7
A11/P2.3	6
A12/P2.4	5
A13/P2.5	4
A14/P2.6	3
A15/P2.7	2
A16/P3.7/RD#	27
A17/P1.7/CEX4/WCLK	35

Input/Output	
Name	Pin
P1.0/T2	28
P1.1/T2EX	29
P1.2/ECI	30
P1.3/CEX0	31
P1.4/CEX1	32
P1.5/CEX2	33
P1.6/CEX3/WAIT#	34
P1.7/CEX4/A17/WCLK	35
P3.0/RXD	20
P3.1/TXD	21
P3.2/INT0#	22
P3.3/INT1#	23
P3.4/T0	24
P3.5/T1	25
P3.6/WR#	26
P3.7/RD#/A16	27

USB Signals	
Name	Pin
ECAP	53
D_{P0}	54
D_{M0}	55
PLLSEL0	44
PLLSEL1	42
PLLSEL2	43
SOF#	50

Processor Control	
Name	Pin
P3.2/INT0#	22
P3.3/INT1#	23
EA#	67
RST	41
XTAL1	38
XTAL2	39

Power & Ground	
Name	Pin
V_{CC}	36, 68
V_{CCP}	19, 51
V_{SS}	1, 37
V_{SSP}	18, 52
AV_{CC}	40

Bus Control & Status	
Name	Pin
P3.6/WR#	26
A16/P3.7/RD#	27
ALE	66
PSEN#	65

Table B-2. Signal Descriptions

Signal Name	Type	Description	Alternate Function
A17	O	**Address Line 17.** Eighteenth external address bit (A17) in extended bus applications. Selected by configuration bits RD1:0 (UCONFIG0.3:2). See Table B-3.	P1.7/CEX4/WCLK
A16	O	**Address Line 16**. Seventeenth external address bit (A16) in extended bus applications. Selected by configuration bits RD1:0 (UCONFIG0.3:2). See Table B-3.	RD#
A15:8†	O	**Address Lines**. Upper address lines of the external bus.	P2.7:0
AD7:0†	I/O	**Address/Data Lines**. Multiplexed lower address lines and data lines of the external bus.	P0.7:0
ALE	O	**Address Latch Enable**. ALE signals the start of an external bus cycle and indicates that valid address information is available on lines A15:8 and AD7:0. An external latch can use ALE to demultiplex the address from the address/data bus.	—
AV_{CC}	PWR	**Analog V_{CC}**. A separate V_{CC} input for the USB phase-locked loop circuitry.	—
CEX2:0 CEX3 CEX4	I/O	**Programmable Counter Array (PCA) Input/Output Pins**. These are input signals for the PCA capture mode and output signals for the PCA compare and PWM modes.	P1.5:3 P1.6/WAIT# P1.7/A17/WCLK
D_{P0}, D_{M0}	I/O	**USB Port 0**. Root USB port. D_{P0} and D_{M0} are the data plus and data minus lines of differential USB port 0. These lines do not have internal pullup resistors. For low-speed devices, provide an external 1.5 KΩ pullup resistor at D_{M0}. For full-speed devices, provide external 1.5 KΩ pullup resistor at D_{P0}. NOTE: Either D_{P0} or D_{M0} must be pulled high. Otherwise a continuous SEO (USB reset) will be applied to these inputs causing the 8X930A*x* to stay in reset.	—
EA#	I	**External Access**. Directs program memory accesses to on-chip or off-chip code memory. EA# = 1 directs program memory accesses to on-chip code memory if the address is within the range of the on-chip code memory; otherwise the access is to external memory. EA# = 0 directs program memory accesses to external memory. Devices without on-chip program memory should have EA# strapped to $V_{SS.}$ The value of EA# is latched at reset.	—
ECAP	I	**External Capacitor**. Must be connected to a 0.1µF capacitor (or larger) to ensure proper operation of the differential line driver. The other lead of the capacitor must be connected to V_{SS}.	—
ECI	I	**PCA External Clock Input**. External clock input to the 16-bit PCA timer.	P1.2

† The descriptions of A15:8/P2.7:0 and AD7:0/P0.7:0 are for the nonpage mode chip configuration. If the chip is configured for page mode operation, port 0 carries the lower address bits (A7:0), and port 2 carries the upper address bits (A15:8) and the data (D7:0).

Table B-2. Signal Descriptions (Continued)

Signal Name	Type	Description	Alternate Function
INT1:0#	I	**External Interrupts 0 and 1**. These inputs set bits IE1:0 in the TCON register. If bits IT1:0 in the TCON register are set, bits IE1:0 are set by a falling edge on INT1#/INT0#. If bits INT1:0 are clear, bits IE1:0 are set by a low level on INT1:0#.	P3.3:2
P0.7:0	I/O	**Port 0**. This is an 8-bit, open-drain, bidirectional I/O port.	AD7:0
P1.0 P1.1 P1.2 P1.5:3 P1.6 P1.7	I/O	**Port 1**. This is an 8-bit, bidirectional I/O port with internal pullups.	T2 T2EX ECI CEX2:0 CEX3/WAIT# CEX4/A17/WCLK
P2.7:0	I/O	**Port 2**. This is an 8-bit, bidirectional I/O port with internal pullups.	A15:8
P3.0 P3.1 P3.3:2 P3.5:4 P3.6 P3.7	I/O	**Port 3**. This is an 8-bit, bidirectional I/O port with internal pullups.	RXD TXD INT1:0# T1:0 WR# RD#/A16
PLLSEL.2:0	I	**Phase Locked Loop Select.** Three-bit code selects USB data rate (see Table B-4).	—
PSEN#	O	**Program Store Enable**. Read signal output to external memory. Asserted for the memory address range specified by configuration bits RD1:0 (UCONFIG0.3:2) See Table B-3. Also see RD#.	—
RD#	O	**Read.** Read signal output to external data memory. Asserted for the memory address range specified by configuration bits RD1:0 (UCONFIG0.3:2). See Table B-3. Also see PSEN#.	P3.7/A16
RST	I	**Reset**. Reset input to the chip. Holding this pin high for 64 oscillator periods while the oscillator is running resets the device. The port pins are driven to their reset conditions when a voltage greater than V_{IH1} is applied, whether or not the oscillator is running. This pin has an internal pulldown resistor, which allows the device to be reset by connecting a capacitor between this pin and V_{CC}. Asserting RST when the chip is in idle mode or powerdown mode returns the chip to normal operation.	—
RXD	I/O	**Receive Serial Data**. RXD sends and receives data in serial I/O mode 0 and receives data in serial I/O modes 1, 2, and 3.	P3.0
SOF#	O	**Start of Frame**. This pin is asserted for eight states when an SOF token is received.	—
T1:0	I	**Timer 1:0 External Clock Inputs**. When timer 1:0 operates as a counter, a falling edge on the T1:0 pin increments the count.	P3.5:4

† The descriptions of A15:8/P2.7:0 and AD7:0/P0.7:0 are for the nonpage mode chip configuration. If the chip is configured for page mode operation, port 0 carries the lower address bits (A7:0), and port 2 carries the upper address bits (A15:8) and the data (D7:0).

Table B-2. Signal Descriptions (Continued)

Signal Name	Type	Description	Alternate Function
T2	I/O	**Timer 2 Clock Input/Output**. For the timer 2 capture mode, this signal is the external clock input. For the clock-out mode, it is the timer 2 clock output.	P1.0
T2EX	I	**Timer 2 External Input.** In timer 2 capture mode, a falling edge initiates a capture of the timer 2 registers. In auto-reload mode, a falling edge causes the timer 2 registers to be reloaded. In the up-down counter mode, this signal determines the count direction: 1 = up, 0 = down.	P1.1
TXD	O	**Transmit Serial Data**. TXD outputs the shift clock in serial I/O mode 0 and transmits serial data in serial I/O modes 1, 2, and 3.	P3.1
V_{CC}	PWR	**Supply Voltage**. Connect this pin to the +5V supply voltage.	—
V_{CCP}	PWR	**Supply Voltage**. Connect this pin to the +5V supply voltage.	—
V_{SS}	GND	**Circuit Ground**. Connect this pin to ground.	—
V_{SSP}	GND	**Circuit Ground**. Connect this pin to ground.	—
WAIT#	I	**Real-time Wait State Input.** The real-time WAIT# input is enabled by writing a logical ‘1’ to the WCON.0 (RTWE) bit at S:A7H. During bus cycles, the external memory system can signal ‘system ready’ to the microcontroller in real time by controlling the WAIT# input signal on the port 1.6 input.	P1.6/CEX3
WCLK	O	**Wait Clock Output.** The real-time WCLK output is driven at port 1.7 (WCLK) by writing a logical ‘1’ to the WCON.1 (RTWCE) bit at S:A7H. When enabled, the WCLK output produces a square wave signal with a period of one-half the oscillator frequency.	P1.7/CEX4/A17
WR#	O	**Write.** Write signal output to external memory. Asserted for the memory address range specified by configuration bits RD1:0 (UCONFIG0.3:2) See RD# and Table B-3.	P3.6
XTAL1	I	**Input to the On-chip, Inverting, Oscillator Amplifier**. To use the internal oscillator, a crystal/resonator circuit is connected to this pin. If an external oscillator is used, its output is connected to this pin. XTAL1 is the clock source for internal timing.	—
XTAL2	O	**Output of the On-chip, Inverting, Oscillator Amplifier**. To use the internal oscillator, a crystal/resonator circuit is connected to this pin. If an external oscillator is used, leave XTAL2 unconnected.	—

† The descriptions of A15:8/P2.7:0 and AD7:0/P0.7:0 are for the nonpage mode chip configuration. If the chip is configured for page mode operation, port 0 carries the lower address bits (A7:0), and port 2 carries the upper address bits (A15:8) and the data (D7:0).

Table B-3. Memory Signal Selections (RD1:0)

RD1:0	A17/P1.7/ CEX4/WCLK	A16/P3.7/RD#	PSEN#	P3.6/WR#	Features
0 0	A17	A16	Asserted for all addresses	Asserted for writes to all memory locations	256-Kbyte external memory
0 1	P1.7/CEX4/ WCLK	A16	Asserted for all addresses	Asserted for writes to all memory locations	128-Kbyte external memory
1 0	P1.7/CEX4/ WCLK	P3.7 only	Asserted for all addresses	Asserted for writes to all memory locations	64-Kbyte external memory. One additional port pin.
1 1	P1.7/CEX4/ WCLK	RD# asserted for addresses ≤ 7F:FFFFH	Asserted for addresses ≥ 80:0000H	Asserted only for writes to MCS® 51 microcontroller data memory locations.	64-Kbyte external memory. Compatible with MCS 51 microcontrollers.

NOTE: RD1:0 are bits 3:2 of configuration byte UCONFIG0 (Figure 4-3 on page 4-5).

Table B-4. 8X930A*x* Operating Frequency

PLLSEL2 Pin 43 (1)	PLLSEL1 Pin 42 (1)	PLLSEL0 Pin 44 (1)	USB Rate (2)	Internal Frequency for CPU and Peripherals ($1/T_{CLK}$) (3)	XTAL1 Frequency F_{OSC}	XTAL1 Clocks per State T_{OSC}/State (5)	Comments
0	0	1	1.5 Mbps (Low Speed)	3 Mhz	6 Mhz	2	PLL Off
1	0	0	1.5 Mbps (Low Speed)	6 Mhz (4)	12 Mhz	2	PLL Off
1	1	0	12 Mbps (Full Speed)	12 Mhz (4)	12 Mhz	1	PLL On

NOTES:
1. Other PLLSEL*x* combinations are not valid.
2. The sampling rate is 4X the USB rate.
3. The 8X930A*x* datasheet AC timing specification defines the following symbols: CPU frequency = F_{CLK} = $1/T_{CLK}$.
4. The 8X930A*x* CPU and peripherals frequency is 3 Mhz (low clock mode) until the LC bit in PCON is cleared.
5. The number of XTAL1 clocks per state (T_{OSC}/state) depends on the PLLSEL2:0 selection. When the CPU is operating in low clock mode (3 MHz), there are four T_{OSC}/state for PLLSEL2:0 = 100 or 110.

C

Registers

APPENDIX C
REGISTERS

This appendix is a reference source of information on the 8X930A*x* special function registers (SFRs). The SFR map in Table C-1 provides the address and reset value for each SFR. SFRs with double borders are endpoint-indexed. For additional information, see “Special Function Registers (SFRs)” on page 3-15. Tables C-2 through C-7 list the SFRs by functional category. The remainder of the appendix contains descriptive tables of the SFRs arranged in alphabetical order. Use the prefix “S:” with SFR addresses to distinguish them from other addresses.

Table C-1. 8X930A*x* SFR Map

	0/8	1/9	2/A	3/B	4/C	5/D	6/E	7/F	
F8		CH 00000000	CCAP0H xxxxxxxx	CCAP1H xxxxxxxx	CCAP2H xxxxxxxx	CCAP3H xxxxxxxx	CCAP4H xxxxxxxx		FF
F0	B 00000000	EPINDEX 1xxxxx00	TXSTAT 0xxx0000	TXDAT xxxxxxxx	TXCON 000x0100	TXFLG 00xx1000	TXCNTL xxxxxxxx	TXCNTH xxxxxxxx	F7
E8		CL 00000000	CCAP0L xxxxxxxx	CCAP1L xxxxxxxx	CCAP2L xxxxxxxx	CCAP3L xxxxxxxx	CCAP4L xxxxxxxx		EF
E0	ACC 00000000	EPCON 00x1xxxx	RXSTAT 00000000	RXDAT xxxxxxxx	RXCON 0x000100	RXFLG 00xx1000	RXCNTL xxxxxxxx	RXCNTH xxxxxxxx	E7
D8	CCON 00x00000	CMOD 00xxx000	CCAPM0 x0000000	CCAPM1 x0000000	CCAPM2 x0000000	CCAPM3 x0000000	CCAPM4 x0000000	PCON1 xxxx0000	DF
D0	PSW 00000000	PSW1 00000000	SOFL 00000000	SOFH 00000000					D7
C8	T2CON 00000000	T2MOD xxxxxx00	RCAP2L 00000000	RCAP2H 00000000	TL2 00000000	TH2 00000000			CF
C0	FIFLG 00000000								C7
B8	IPL0 x0000000	SADEN 00000000					SPH 0000000		BF
B0	P3 11111111	IEN1 00000000	IPL1 00000000	IPH1 00000000				IPH0 x0000000	B7
A8	IEN0 00000000	SADDR 00000000							AF
A0	P2 11111111		FIE 00000000				WDTRST xxxxxxxx	WCON xxxxxx00	A7
98	SCON 00000000	SBUF xxxxxxxx							9F
90	P1 11111111								97
88	TCON 00000000	TMOD 00000000	TL0 00000000	TL1 00000000	TH0 00000000	TH1 00000000		FADDR 00000000	8F
80	P0 11111111	SP 00000111	DPL 00000000	DPH 00000000	DPXL 00000001			PCON 00XX0000	87
	0/8	1/9	2/A	3/B	4/C	5/D	6/E	7/F	

MCS 251 microcontroller SFRs Endpoint-indexed SFRs

C.1 SFRS BY FUNCTIONAL CATEGORY

Table C-2. Core SFRs

Mnemonic	Name	Address
ACC†	Accumulator	S:E0H
B†	B register	S:F0H
PSW	Program Status Word	S:D0H
PSW1	Program Status Word 1	S:D1H
SP†	Stack Pointer – LSB of SPX	S:81H
SPH†	Stack Pointer High – MSB of SPX	S:BEH
DPTR†	Data Pointer (2 bytes)	—
DPL†	Low Byte of DPTR	S:82H
DPH†	High Byte of DPTR	S:83H
DPXL†	Data Pointer Extended, Low	S:84H
PCON	Power Control	S:87H
PCON1	USB Power Control.	S:DFH
IEN0	Interrupt Enable Control Register 0	S:A8H
IEN1	Interrupt Enable Control Register 1	S:B1H
IPH0	Interrupt Priority Control High 0	S:B7H
IPL0	Interrupt Priority Control Low 0	S:B8H
IPH1	Interrupt Priority High Control Register 1.	S:B3H
IPL1	Interrupt Priority Low Control Register 1.	S:B2H

†These SFRs can also be accessed by their corresponding registers in the register file.

Table C-3. I/O Port SFRs

Mnemonic	Name	Address
P0	Port 0	S:80H
P1	Port 1	S:90H
P2	Port 2	S:A0H
P3	Port 3	S:B0H

Table C-4. Serial I/O SFRs

Mnemonic	Name	Address
SCON	Serial Control	S:98H
SBUF	Serial Data Buffer	S:99H
SADEN	Slave Address Mask	S:B9H
SADDR	Slave Address	S:A9H

Table C-5. USB Function SFRs

Mnemonic	Name	Address
EPCON	Endpoint Control Register.	S:E1H
EPINDEX	Endpoint Index Register.	S:F1H
FADDR	Function Address Register.	S:8FH
FIE	Function Interrupt Enable Register.	S:A2H
FIFLG	Function Interrupt Flag Register.	S:C0H
RXCNTH	Receive FIFO Byte-Count High Register.	S:E7H
RXCNTL	Receive FIFO Byte-Count Low Register.	S:E6H
RXCON	Receive FIFO Control Register.	S:E4H
RXDAT	Receive FIFO Data Register.	S:E3H
RXFLG	Receive FIFO Flag Register.	S:E5H
RXSTAT	Endpoint Receive Status Register.	S:E2H
SOFH	Start of Frame High Register.	S:D3H
SOFL	Start of Frame Low Register.	S:D2H
TXCNTH	Transmit Count High Register.	S:F7H
TXCNTL	Transmit Count Low Register.	S:F6H
TXCON	Transmit FIFO Control Register.	S:F4H
TXDAT	Transmit FIFO Data Register.	S:F3H
TXFLG	Transmit Flag Register.	S:F5H
TXSTAT	Endpoint Transmit Status Register.	S:FAH

Table C-6. Timer/Counter and Watchdog Timer SFRs

Mnemonic	Name	Address
TL0	Timer/Counter 0 Low Byte	S:8AH
TH0	Timer/Counter 0 High Byte	S:8CH
TL1	Timer/Counter 1 Low Byte	S:8BH
TH1	Timer/Counter 1 High Byte	S:8DH
TL2	Timer/Counter 2 Low Byte	S:CCH
TH2	Timer/Counter 2 High Byte	S:CDH
TCON	Timer/Counter 0 and 1 Control	S:88H
TMOD	Timer/Counter 0 and 1 Mode Control	S:89H
T2CON	Timer/Counter 2 Control	S:C8H
T2MOD	Timer/Counter 2 Mode Control	S:C9H
RCAP2L	Timer 2 Reload/Capture Low Byte	S:CAH
RCAP2H	Timer 2 Reload/Capture High Byte	S:CBH
WDTRST	WatchDog Timer Reset	S:A6H

Table C-7. Programmable Counter Array (PCA) SFRs

Mnemonic	Name	Address
CCON	PCA Timer/Counter Control	S:D8H
CMOD	PCA Timer/Counter Mode	S:D9H
CCAPM0	PCA Timer/Counter Mode 0	S:DAH
CCAPM1	PCA Timer/Counter Mode 1	S:DBH
CCAPM2	PCA Timer/Counter Mode 2	S:DCH
CCAPM3	PCA Timer/Counter Mode 3	S:DDH
CCAPM4	PCA Timer/Counter Mode 4	S:DEH
CL	PCA Timer/Counter Low Byte	S:E9H
CH	PCA Timer/Counter High Byte	S:F9H
CCAP0L	PCA Compare/Capture Module 0 Low Byte	S:EAH
CCAP1L	PCA Compare/Capture Module 1 Low Byte	S:EBH
CCAP2L	PCA Compare/Capture Module 2 Low Byte	S:ECH
CCAP3L	PCA Compare/Capture Module 3 Low Byte	S:EDH
CCAP4L	PCA Compare/Capture Module 4 Low Byte	S:EEH
CCAP0H	PCA Compare/Capture Module 0 High Byte	S:FAH
CCAP1H	PCA Compare/Capture Module 1 High Byte	S:FBH
CCAP2H	PCA Compare/Capture Module 2 High Byte	S:FCH
CCAP3H	PCA Compare/Capture Module 3 High Byte	S:FDH
CCAP4H	PCA Compare/Capture Module 4 High Byte	S:FEH

C.2 SFR DESCRIPTIONS

This section contains a complete description of all 8X930A*x* SFRs in alphabetical order.

NOTE

All SFR bits are software read/write unless otherwise noted in the bit definition.

ACC

Address: S:E0H
Reset State: 0000 0000B

Accumulator. ACC provides SFR access to the accumulator, which resides in the register file as byte register R11 (also named ACC). Instructions in the MCS® 51 architecture use the accumulator as both source and destination for calculations and moves. Instructions in the MCS 251 architecture assign no special significance to R11. These instructions can use byte registers R*m* (*m* = 0–15) interchangeably.

7							0
Accumulator Contents							

Bit Number	Bit Mnemonic	Function
7:0	ACC.7:0	Accumulator.

B

Address: S:F0H
Reset State: 0000 0000B

B Register. The B register provides SFR access to byte register R10 (also named B) in the register file. The B register is used as both a source and destination in multiply and divide operations. For all other operations, the B register is available for use as one of the byte registers Rm, m = 0–15.

7							0
B Register Contents							

Bit Number	Bit Mnemonic	Function
7:0	B.7:0	B Register.

CCAPxH, CCAPxL (x = 0–4)

Address:	CCAP0H,L	S:FAH, S:EAH
	CCAP1H,L	S:FBH, S:EBH
	CCAP2H,L	S:FCH, S:ECH
	CCAP3H,L	S:FDH, S:EDH
	CCAP4H,L	S:FEH, S:EEH
Reset State:		XXXX XXXXB

PCA Module Compare/Capture Registers. These five register pairs store the 16-bit comparison value or captured value for the corresponding compare/capture modules. In the PWM mode, the low-byte register controls the duty cycle of the output waveform.

7	0
High/Low Byte of Compare/Capture Values	

Bit Number	Bit Mnemonic	Function
7:0	CCAP*x*H.7:0	High byte of PCA comparison or capture values.
	CCAP*x*L.7:0	Low byte of PCA comparison or capture values.

CCAPM*x* (*x* = 0–4)

Address:	CCAPM0	S:DAH
	CCAPM1	S:DBH
	CCAPM2	S:DCH
	CCAPM3	S:DDH
	CCAPM4	S:DEH
Reset State:		X000 0000B

PCA Compare/Capture Module Mode Registers. These five registers select the operating mode of the corresponding compare/capture module. Each register also contains an enable interrupt bit (ECCFx) for generating an interrupt request when the module's compare/capture flag (CCF*x* in the CCON register) is set. See Table 11-3 on page 11-14 for mode select bit combinations.

7 **0**

—	ECOM*x*	CAPP*x*	CAPN*x*	MAT*x*	TOG*x*	PWM*x*	ECCF*x*

Bit Number	Bit Mnemonic	Function
7	—	Reserved: The value read from this bit is indeterminate. Write a zero to this bit
6	ECOM*x*	Compare Modes: ECOM*x* = 1 enables the module comparator function. The comparator is used to implement the software timer, high-speed output, pulse width modulation, and watchdog timer modes.
5	CAPP*x*	Capture Mode (Positive): CAPP*x* = 1 enables the capture function with capture triggered by a positive edge on pin CEX*x*.
4	CAPN*x*	Capture Mode (Negative): CAPN*x* = 1 enables the capture function with capture triggered by a negative edge on pin CEX*x*.
3	MAT*x*	Match: Set ECOM*x* and MAT*x* to implement the software timer mode. When MAT*x* = 1, a match of the PCA timer/counter with the compare/capture register sets the CCF*x* bit in the CCON register, flagging an interrupt.
2	TOG*x*	Toggle: Set ECOM*x*, MAT*x*, and TOG*x* to implement the high-speed output mode. When TOG*x* = 1, a match of the PCA timer/counter with the compare/capture register toggles the CEX*x* pin.
1	PWM*x*	Pulse Width Modulation Mode: PWM*x* = 1 configures the module for operation as an 8-bit pulse width modulator with output waveform on the CEX*x* pin.
0	ECCF*x*	Enable CCF*x* Interrupt: Enables compare/capture flag CCF*x* in the CCON register to generate an interrupt request.

CCON

Address: S:D8H
Reset State: 00X0 0000B

PCA Timer/Counter Control Register. Contains the run control bit and overflow flag for the PCA timer/counter, and the compare/capture flags for the five PCA compare/capture modules.

7							0
CF	CR	—	CCF4	CCF3	CCF2	CCF1	CCF0

Bit Number	Bit Mnemonic	Function
7	CF	PCA Timer/Counter Overflow Flag: Set by hardware when the PCA timer/counter rolls over. This generates an interrupt request if the ECF interrupt enable bit in CMOD is set. CF can be set by hardware or software but can be cleared only by software.
6	CR	PCA Timer/Counter Run Control Bit: Set and cleared by software to turn the PCA timer/counter on and off.
5	—	Reserved: The value read from this bit is indeterminate. Write a zero to this bit.
4:0	CCF4:0	PCA Module Compare/Capture Flags: Set by hardware when a match or capture occurs. This generates a PCA interrupt request if the ECCF*x* interrupt enable bit in the corresponding CCAPM*x* register is set. Must be cleared by software.

CH, CL

Address: S:F9H
S:E9H
Reset State: 0000 0000B

CH, CL Registers. These registers operate in cascade to form the 16-bit PCA timer/counter.

7	0
High/Low Byte PCA Timer/Counter	

Bit Number	Bit Mnemonic	Function
7:0	CH.7:0 CL.7:0	High byte of the PCA timer/counter Low byte of the PCA timer/counter

CMOD

Address: S:D9H
Reset State: 00XX X000B

PCA Timer/Counter Mode Register. Contains bits for selecting the PCA timer/counter input, disabling the PCA timer/counter during idle mode, enabling the PCA WDT reset output (module 4 only), and enabling the PCA timer/counter overflow interrupt.

7							0
CIDL	WDTE	—	—	—	CPS1	CPS0	ECF

Bit Number	Bit Mnemonic	Function
7	CIDL	PCA Timer/Counter Idle Control: CIDL = 1 disables the PCA timer/counter during idle mode. CIDL = 0 allows the PCA timer/counter to run during idle mode.
6	WDTE	Watchdog Timer Enable: WDTE = 1 enables the watchdog timer output on PCA module 4. WDTE = 0 disables the PCA watchdog timer output.
5:3	—	Reserved: Values read from these bits are indeterminate. Write zeros to these bits.
2:1	CPS1:0	PCA Timer/Counter Input Select: **CPS1 CPS0** 0 0 F_{OSC} /12 0 1 F_{OSC} /4 1 0 Timer 0 overflow 1 1 External clock at ECI pin (maximum rate = F_{OSC} /8)
0	ECF	PCA Timer/Counter Interrupt Enable: ECF = 1 enables the CF bit in the CCON register to generate an interrupt request.

DPH

Address: S:83H
Reset State: 0000 0000B

Data Pointer High. DPH provides SFR access to register file location 58 (also named DPH). DPH is the upper byte of the 16-bit data pointer, DPTR. Instructions in the MCS® 51 architecture use DPTR for data moves, code moves, and for a jump instruction (JMP @A+DPTR). See also DPL and DPXL.

7							0
DPH Contents							

Bit Number	Bit Mnemonic	Function
7:0	DPH.7:0	Data Pointer High: Bits 8–15 of the extended data pointer, DPX (DR56).

DPL

Address: S:82H
Reset State: 0000 0000B

Data Pointer Low. DPL provides SFR access to register file location 59 (also named DPL). DPL is the low byte of the 16-bit data pointer, DPTR. Instructions in the MCS® 51 architecture use the 16-bit data pointer for data moves, code moves, and for a jump instruction (JMP @A+DPTR). See also DPH and DPXL.

7							0
DPL Contents							

Bit Number	Bit Mnemonic	Function
7:0	DPL.7:0	Data Pointer Low: Bits 0–7 of the extended data pointer, DPX (DR56).

DPXL

Address: S:84H
Reset State: 0000 0001B

Data Pointer Extended Low. DPXL provides SFR access to register file location 57 (also named DPXL). Location 57 is the lower byte of the upper word of the extended data pointer, DPX = DR56, whose lower word is the 16-bit data pointer, DPTR. See also DPH and DPL.

7							0
DPXL Contents							

Bit Number	Bit Mnemonic	Function
7:0	DPXL.7:0	Data Pointer Extended Low: Bits 16–23 of the extended data pointer, DPX (DR56).

EPCON

Address S:E1H
Reset State *x* = 0† 0011 0101B
x = 1, 2, 3† 0001 0000B

Endpoint Control Register. This SFR configures the operation of the endpoint referenced by EPINDEX. The reset value is 00110101B for endpoint 1 and 00010000B for endpoints 1, 2, and 3.

7							0
RXSTL	TXSTL	CTLEP	RXSPM	RXIE	RXEPEN	TXOE	TXEPEN

Bit Number	Bit Mnemonic	Function
7	RXSTL	Stall Receive Endpoint: Set this bit to stall the receive endpoint. Clear this bit only when the host has intervened through commands sent down endpoint 0. When this bit is set and RXSETUP is clear, the receive endpoint will respond with a STALL handshake to a valid OUT token. This bit does not affect the reception of SETUP tokens by a control endpoint. The state of this bit is sampled on a valid OUT token.
6	TXSTL	Stall Transmit Endpoint: Set this bit to stall the transmit endpoint. This bit should only be cleared when the host has intervened through commands sent down endpoint 0. When this bit is set and RXSETUP is clear, the receive endpoint will respond with a STALL handshake to a valid IN token.The state of this bit is sampled on a valid IN token.

† *x* = endpoint index. See EPINDEX.

EPCON (Continued)

Address		S:E1H
Reset State	$x = 0^{\dagger}$	0011 0101B
	$x = 1, 2, 3^{\dagger}$	0001 0000B

Endpoint Control Register. This SFR configures the operation of the endpoint referenced by EPINDEX. The reset value is 00110101B for endpoint 1 and 00010000B for endpoints 1, 2, and 3.

7							0
RXSTL	TXSTL	CTLEP	RXSPM	RXIE	RXEPEN	TXOE	TXEPEN

Bit Number	Bit Mnemonic	Function
5	CTLEP	Control Endpoint: Set this bit to configure the endpoint as a control endpoint. Only control endpoints are capable of receiving SETUP tokens. The state of this bit is sampled on a valid SETUP token.
4	RXSPM	Receive Single Packet Mode: Set this bit to configure the receive endpoint for single data packet operation. When enabled, only a single data packet is allowed to reside in the receive FIFO. The state of this bit is sampled on a valid OUT token. Note: For control endpoints (CTLEP=1), this bit should be set for single packet mode operation as the recommended firmware model. However, it is acceptable to have a control endpoint with dual packet mode configuration as long as the firmware handles the endpoint correctly.
3	RXIE	Receive Input Enable: Set this bit to enable data from the USB to be written into the receive FIFO. If cleared, the endpoint will not write the received data into the receive FIFO and at the end of reception, it returns a NAK handshake on a valid OUT token if the RXSTL bit is not set.This bit does not affect a valid SETUP token.
2	RXEPEN	Receive Endpoint Enable: Set this bit to enable the receive endpoint. When disabled, the endpoint does not respond to a valid OUT or SETUP token. The state of this bit is sampled on a valid OUT or SETUP token. This bit is hardware read-only and has the highest priority among RXIE and RXSTL. Note that endpoint 0 is enabled for reception upon reset.
1	TXOE	Transmit Output Enable. This bit is used to enable the data in the transmit FIFO to be transmitted. If cleared, the endpoint returns a NAK handshake to a valid IN token if the TXSTL bit is not set. The state of this bit is sampled on a valid IN token.
0	TXEPEN	Transmit Endpoint Enable: This bit is used to enable the transmit endpoint. When disabled, the endpoint does not respond to a valid IN token. The state of this bit is sampled on a valid IN token. This bit is hardware read only. Note that endpoint 0 is enabled for transmission upon reset.

† *x* = endpoint index. See EPINDEX.

EPINDEX

Address S:F1H
Reset State 1XXX XX00B

Endpoint Index Register. This SFR selects the endpoint to use as an index to endpoint-specific SFRs.

7							0
—	—	—	—	—	—	EPINX1	EPINX0

Bit Number	Bit Mnemonic	Function
7:2	—	Reserved: Write zeros to these bits. Note: Although the reset state for bit 7 is '1', always write zeros to bits 7:2 of this register.
1:0	EPINX1:0	Endpoint Index Select: Used to select the function endpoint number to be indexed. The 8X930A*x* is set up accordingly: the USB SFR definitions for TXDAT, TXCON, TXFLG, TXCNTH/L, RXDAT, RXCON, RXFLG, RXCNTH/L, EPCON, TXSTAT, and RXSTAT are adjusted for the selected endpoint. The SFRs are connected to the appropriate transmit/receive FIFO pair. This register is hardware read-only. **EPINX1 EPINX0** 0 0 Endpoint 0. Control Transfer 0 1 Endpoint 1. 1 0 Endpoint 2. 1 1 Endpoint 3.

FADDR

Address: S:8FH
Reset State: 0000 0000B

Function Address Register. This SFR holds the address for the USB device. During bus enumeration it is written with a unique value assigned by the host.

7	0
—	A6:0

Bit Number	Bit Mnemonic	Function
7	—	Reserved: The value read from this bit is indeterminate. Write a zero to this bit.
6:0	A6:0	7-bit Programmable Function Address: This register is programmed through the commands received via endpoint 0 on configuration, which should be the only time the firmware should change the value of this register. This register is read-only by hardware.

FIE

Address: S:A2H
Reset State: 0000 0000B

Function Interrupt Enable Register. Enables and disables the receive and transmit done interrupts for the four function endpoints.

7 **0**

FRXIE3	FTXIE3	FRXIE2	FTXIE2	FRXIE1	FTXIE1	FRXIE0	FTXIE0

Bit Number	Bit Mnemonic	Function
7	FRXIE3	Function Receive Interrupt Enable 3: Enables receive done interrupt for endpoint 3 (FRXD3).
6	FTXIE3	Function Transmit Interrupt Enable 3: Enables transmit done interrupt for endpoint 3 (FTXD3).
5	FRXIE2	Function Receive Interrupt Enable 2: Enables the receive done interrupt for endpoint 2 (FRXD2).
4	FTXIE2	Function Transmit Interrupt Enable 2: Enables the transmit done interrupt for endpoint 2 (FTXD2).
3	FRXIE1	Function Receive Interrupt Enable 1: Enables the receive done interrupt for endpoint 1 (FRXD1).
2	FTXIE1	Function Transmit Interrupt Enable 1: Enables the transmit done interrupt for endpoint 1 (FTXD1).
1	FRXIE0	Function Receive Interrupt Enable 0: Enables the receive done interrupt for endpoint 0 (FRXD0).
0	FTXIE0	Function Transmit Interrupt Enable 0: Enables the transmit done interrupt for endpoint0 (FTXD0).

NOTE: For all bits, a ‘1’ means the interrupt is enabled and will cause an interrupt to be signaled to the microcontroller. A ‘0’ means the associated interrupt source is disabled and cannot cause an interrupt, even though the interrupt bit’s value will still be reflected in the FIFLG register.

FIFLG

Address: S:C0H
Reset State: 0000 0000B

Function Interrupt Flag Register. Contains the USB Function's Transmit and Receive Done interrupt flags for non-isochronous endpoints.

7							0
FRXD3	FTXD3	FRXD2	FTXD2	FRXD1	FTXD1	FRXD0	FTXD0

Bit Number	Bit Mnemonic	Function
7	FRXD3	Function Receive Done Flag, Endpoint 3: This bit is set by hardware to indicate that there is either: 1. Valid data waiting to be serviced in the receive FIFO for function endpoint 3 and that the data was received without error and has been acknowledged; or 2. Data was received with a Receive Data Error requiring firmware intervention to be cleared.
6	FTXD3	Function Transmit Done Flag, Endpoint 3: Hardware sets this bit to indicate that one of two conditions exists in the transmit FIFO for function endpoint 3: 1. The transmit data has been transmitted and the Host has sent an acknowledgment which was successfully received; or 2. A transmit data-related error occurred during transmission of the data packet, which requires servicing by firmware to be cleared.
5	FRXD2	Function Receive Done Flag, Endpoint 2: This bit is similar to FRXD3, above, except that it applies to function endpoint 2.
4	FTXD2	Function Transmit Done Flag, Endpoint 2: This bit is similar to FTXD3, above, except that it applies to function endpoint 2.
3	FRXD1	Function Receive Done Flag, Endpoint 1: This bit is similar to FRXD3, above, except that it applies to endpoint 1.
2	FTXD1	Function Transmit Done Flag, Endpoint 1: This bit is similar to FTXD3, above, except that it applies to endpoint 1.
1	FRXD0	Function Receive Done Flag, Endpoint 0: This bit is similar to FRXD3, above, except that it applies to endpoint 0.
0	FTXD0	Function Transmit Done Flag, Endpoint 0: This bit is similar to FTXD3, above, except that it applies to endpoint 0.

NOTE: For all bits in the Interrupt Flag Register, a '1' indicates that an interrupt is actively pending; a '0' indicates that the interrupt is not active. The interrupt status is shown regardless of the state of the corresponding interrupt enable bit in the FIE. Bits are set-only by hardware and clearable in software. Software can also set the bits for text purposes, allowing the interrupt to be generated in software.

IEN0

Address: S:A8H
Reset State: 0000 0000B

Interrupt Enable Register 0. IEN0 contains two types of interrupt enable bits. The global enable bit (EA) enables/disables all of the interrupts (including those in IEN1), except the TRAP interrupt, which is always enabled. The remaining bits enable/disable the other individual interrupts.

7							0
EA	EC	ET2	ES	ET1	EX1	ET0	EX0

Bit Number	Bit Mnemonic	Function
7	EA	Global Interrupt Enable: Setting this bit enables all interrupts that are individually enabled by bits 0–6. Clearing this bit disables all interrupts, except the TRAP interrupt, which is always enabled.
6	EC	PCA Interrupt Enable: Setting this bit enables the PCA interrupt.
5	ET2	Timer 2 Overflow Interrupt Enable: Setting this bit enables the timer 2 overflow interrupt.
4	ES	Serial I/O Port Interrupt Enable: Setting this bit enables the serial I/O port interrupt.
3	ET1	Timer 1 Overflow Interrupt Enable: Setting this bit enables the timer 1 overflow interrupt.
2	EX1	External Interrupt 1 Enable: Setting this bit enables external interrupt 1.
1	ET0	Timer 0 Overflow Interrupt Enable: Setting this bit enables the timer 0 overflow interrupt.
0	EX0	External Interrupt 0 Enable: Setting this bit enables external interrupt 0.

IEN1

Address: S:B1H
Reset State: XXXX X000H

Interrupt Enable Register 1. Contains the enable bits for the USB interrupts.

7							0
—	—	—	—	—	ESR	EF	ESOF

Bit Number	Bit Mnemonic	Function
7:3	—	Reserved: Values read from these bits are indeterminate. Write zeros to these bits.
2	ESR	Enable Suspend/Resume: USB Global Suspend/Resume Interrupt Enable bit.
1	EF	Enable Function: Transmit/Receive Done interrupt enable bit for non-isochronous USB function endpoints.
0	ESOF	Enable Start-of-Frame: Any Start-of-Frame interrupt enable bit for isochronous endpoints.

IPH0

Address: S:B7H
Reset State: X000 0000B

Interrupt Priority High Control Register 0. IPH0, together with IPL0, assigns each interrupt in IEN0 a priority level from 0 (lowest) to 3 (highest):

IPH0.*x*	**IPL0.*x***	**Priority Level**
0	0	0 (lowest priority)
0	1	1
1	0	2
1	1	3 (highest priority)

7							**0**
—	IPH0.6	IPH0.5	IPH0.4	IPH0.3	IPH0.2	IPH0.1	IPH0.0

Bit Number	Bit Mnemonic	Function
7	—	Reserved: The value read from this bit is indeterminate. Write a zero to this bit.
6	IPH0.6	PCA Interrupt Priority Bit High
5	IPH0.5	Timer 2 Overflow Interrupt Priority Bit High
4	IPH0.4	Serial I/O Port Interrupt Priority Bit High
3	IPH0.3	Timer 1 Overflow Interrupt Priority Bit High
2	IPH0.2	External Interrupt 1 Priority Bit High
1	IPH0.1	Timer 0 Overflow Interrupt Priority Bit High
0	IPH0.0	External Interrupt 0 Priority Bit High

IPL0

Address: S:B8H
Reset State: X000 0000B

Interrupt Priority Low Control Register 0. IPL0, together with IPH0, assigns each interrupt in IEN0 a priority level from 0 (lowest) to 3 (highest):

IPH0.*x*	IPL0.*x*	Priority Level
0	0	0 (lowest priority)
0	1	1
1	0	2
1	1	3 (highest priority)

7							0
—	IPL0.6	IPL0.5	IPL0.4	IPL0.3	IPL0.2	IPL0.1	IPL0.0

Bit Number	Bit Mnemonic	Function
7	—	Reserved: The value read from this bit is indeterminate. Write a zero to this bit.
6	IPL0.6	PCA Interrupt Priority Bit Low
5	IPL0.5	Timer 2 Overflow Interrupt Priority Bit Low
4	IPL0.4	Serial I/O Port Interrupt Priority Bit Low
3	IPL0.3	Timer 1 Overflow Interrupt Priority Bit Low
2	IPL0.2	External Interrupt 1 Priority Bit Low
1	IPL0.1	Timer 0 Overflow Interrupt Priority Bit Low
0	IPL0.0	External Interrupt 0 Priority Bit Low

IPH1

Address: S:B3H
Reset State: X000 0000B

Interrupt Priority High Control Register 1. IPH1, together with IPL1, assigns each interrupt in IEN1 a priority level from 0 (lowest) to 3 (highest):

IPH1.*x*	**IPL1.*x***	**Priority Level**
0	0	0 (lowest priority)
0	1	1
1	0	2
1	1	3 (highest priority)

7							**0**
—	—	—	—	—	IPH1.2	IPH1.1	IPH1.0

Bit Number	Bit Mnemonic	Function
7:3	—	Reserved: Values read from these bits are indeterminate. Write zeros to these bits.
2	IPH1.2	Global Suspend/Resume Interrupt Priority Bit High
1	IPH1.1	USB Function Interrupt Priority Bit High
0	IPH1.0	USB Any SOF Interrupt Priority Bit High

IPL1

Address: S:B2H
Reset State: X000 0000B

Interrupt Priority Low Control Register 1. IPL1, together with IPH1, assigns each interrupt in IEN1 a priority level from 0 (lowest) to 3 (highest):

IPH1.*x*	IPL1.*x*	Priority Level
0	0	0 (lowest priority)
0	1	1
1	0	2
1	1	3 (highest priority)

7							0
—	—	—	—	—	IPL1.2	IPL1.1	IPL1.0

Bit Number	Bit Mnemonic	Function
7:3	—	Reserved: Values read from these bits are indeterminate. Write zeros to these bits.
2	IPL1.2	Global Suspend/Resume Interrupt Priority Bit Low
1	IPL1.1	USB Function Interrupt Priority Bit Low
0	IPL1.0	USB Any SOF Interrupt Priority Bit Low

P0

Address: S:80H
Reset State: 1111 1111B

Port 0. P0 is the SFR that contains data to be driven out from the port 0 pins. Read-modify-write instructions that read port 0 read this register. The other instructions that read port 0 read the port 0 pins. When port 0 is used for an external bus cycle, the CPU always writes FFH to P0, and the former contents of P0 are lost.

7	0
P0 Contents	

Bit Number	Bit Mnemonic	Function
7:0	P0.7:0	Port 0 Register: Write data to be driven onto the port 0 pins to these bits.

P1

Address: S:90H
Reset State: 1111 1111B

Port 1. P1 is the SFR that contains data to be driven out from the port 1 pins. Read-modify-write instructions that read port 1 read this register. Other instructions that read port 1 read the port 1 pins.

7							0
P1 Contents							

Bit Number	Bit Mnemonic	Function
7:0	P1.7:0	Port 1 Register: Write data to be driven onto the port 1 pins to these bits.

P2

Address: S:A0H
Reset State: 1111 1111B

Port 2. P2 is the SFR that contains data to be driven out from the port 2 pins. Read-modify-write instructions that read port 2 read this register. Other instructions that read port 2 read the port 2 pins.

7							0
P2 Contents							

Bit Number	Bit Mnemonic	Function
7:0	P2.7:0	Port 2 Register: Write data to be driven onto the port 2 pins to these bits.

P3

Address: S:B0H
Reset State: 1111 1111B

Port 3. P3 is the SFR that contains data to be driven out from the port 3 pins. Read-modify-write instructions that read port 3 read this register. Other instructions that read port 3 read the port 3 pins.

7							0
P3 Contents							

Bit Number	Bit Mnemonic	Function
7:0	P3.7:0	Port 3 Register: Write data to be driven onto the port 3 pins to these bits.

PCON

Address: S:87H
Reset State: 00XX 0000B

Power Control Register. Contains the power off flag (POF) and bits for enabling the idle and powerdown modes. Also contains two general-purpose flags and two bits that control serial I/O functions—the double baud rate bit and a bit that selects whether accesses to SCON.7 are to the FE bit or the SM0 bit.

7							0
SMOD1	SMOD0	LC	POF	GF1	GF0	PD	IDL

Bit Number	Bit Mnemonic	Function
7	SMOD1	Double Baud Rate Bit: When set, doubles the baud rate when timer 1 is used and mode 1, 2, or 3 is selected in the SCON register. See “Baud Rates” on page 12-10.
6	SMOD0	SCON.7 Select: When set, read/write accesses to SCON.7 are to the FE bit. When clear, read/write accesses to SCON.7 are to the SM0 bit. See Figure 12-2 on page 12-5.
5	LC	Low Clock Enable: When this bit is set, the CPU and peripherals (except the USB module) operate at 3 MHz. This bit is automatically set after a reset. Clearing this bit through firmware causes the operating clock to return to the hardware selection speed.
4	POF	Power Off Flag: Set by hardware as V_{CC} rises above 3 V to indicate that power has been off or V_{CC} had fallen below 3 V and that on-chip volatile memory is indeterminate. Set or cleared by software.
3	GF1	General Purpose Flag: Set or cleared by software. One use is to indicate whether an interrupt occurred during normal operation or during idle mode.
2	GF0	General Purpose Flag: Set or cleared by software. One use is to indicate whether an interrupt occurred during normal operation or during idle mode.
1	PD	Powerdown Mode Bit: When set, activates powerdown mode. Cleared by hardware when an interrupt or reset occurs.
0	IDL	Idle Mode Bit: When set, activates idle mode. Cleared by hardware when an interrupt or reset occurs. If IDL and PD are both set, PD takes precedence.

PCON1

Address: S:DFH
Reset State: XXXX X000B

USB Power Control Register. Facilitates USB power control of the 8X930A*x*, including global suspend/resume and USB function resume.

7							0
—	—	—	—	—	RWU	GRSM	GSUS

Bit Number	Bit Mnemonic	Function
7:3	—	Reserved: The value read from these bits are indeterminate. Write zeroes to these bits.
2	RWU	Remote Wake-up Bit: (Cleared by hardware) 1 = wake-up. This bit is used by the USB function to initiate a remote wake-up. Set by firmware to drive resume signaling on the USB lines to the host or upstream hub. Cleared by hardware. Note: do not set this bit unless the USB function is suspended (GSUS = 1). See Figure 14-4 on page 14-10.
1	GRSM	Global Resume Bit: (Set by hardware) 1 = resume. Set by hardware when a global resume is detected on the USB lines. This bit is ORed with GSUS to generate the interrupt.† Cleared by software when servicing the GRSM interrupt. (This bit can also be set/cleared by software for testability.) This bit is not set if remote wakeup is used (see RWU). See Figure 14-4 on page 14-10.
0	GSUS	Global Suspend Bit: (Set and cleared by hardware) 1 = suspend. This bit is set by hardware when global suspend is detected on the USB lines. This bit is ORed with the GRSM bit to generate the interrupt.† During this ISR, software should set the PD bit to enter the suspend mode. Cleared by firmware when a resume occurs. See Figure 14-4 on page 14-10.

† Software should prioritize GRSM over GSUS if both bits are set simultaneously.

PSW

Address: S:D0H
Reset State: 0000 0000B

Program Status Word. PSW contains bits that reflect the results of operations, bits that select the register bank for registers R0–R7, and two general-purpose flags that are available to the user.

7 **0**

CY	AC	F0	RS1	RS0	OV	UD	P

Bit Number	Bit Mnemonic	Function
7	CY	Carry Flag: The carry flag is set by an addition instruction (ADD, ADDC) if there is a carry out of the MSB. It is set by a subtraction (SUB, SUBB) or compare (CMP) if a borrow is needed for the MSB. The carry flag is also affected by logical bit, bit move, multiply, decimal adjust, and some rotate and shift instructions (see Table 5-10 on page 5-16).
6	AC	Auxiliary Carry Flag: The auxiliary carry flag is affected only by instructions that address 8-bit operands. The AC flag is set if an arithmetic instruction with an 8-bit operand produces a carry out of bit 3 (from addition) or a borrow into bit 3 (from subtraction). Otherwise it is cleared. This flag is useful for BCD arithmetic (see Table 5-10 on page 5-16).
5	F0	Flag 0: This general-purpose flag is available to the user.
4:3	RS1:0	Register Bank Select Bits 1 and 0: These bits select the memory locations that comprise the active bank of the register file (registers R0–R7). **RS1 RS0 Bank Address** 0 0 0 00H–07H 0 1 1 08H–0FH 1 0 2 10H–17H 1 1 3 18H–1FH
2	OV	Overflow Flag: This bit is set if an addition or subtraction of signed variables results in an overflow error (i.e., if the magnitude of the sum or difference is too great for the seven LSBs in 2's-complement representation). The overflow flag is also set if a multiplication product overflows one byte or if a division by zero is attempted.
1	UD	User-definable Flag: This general-purpose flag is available to the user.
0	P	Parity Bit: This bit indicates the parity of the accumulator. It is set if an odd number of bits in the accumulator are set. Otherwise, it is cleared. Not all instructions update the parity bit. The parity bit is set or cleared by instructions that change the contents of the accumulator (ACC, Register R11).

PSW1

Address: S:D1H
Reset State: 0000 0000B

Program Status Word 1. PSW1 contains bits that reflect the results of operations and bits that select the register bank for registers R0–R7.

7							0
CY	AC	N	RS1	RS0	OV	Z	—

Bit Number	Bit Mnemonic	Function
7	CY	Carry Flag: Identical to the CY bit in the PSW register.
6	AC	Auxiliary Carry Flag: Identical to the AC bit in the PSW register.
5	N	Negative Flag: This bit is set if the result of the last logical or arithmetic operation was negative. Otherwise it is cleared.
4:3	RS1:0	Register Bank Select Bits 0 and 1: Identical to the RS1:0 bits in the PSW register.
2	OV	Overflow Flag: Identical to the OV bit in the PSW register.
1	Z	Zero Flag: This flag is set if the result of the last logical or arithmetic operation is zero. Otherwise it is cleared.
0	—	Reserved: The value read from this bit is indeterminate. Write a zero to this bit.

RCAP2H, RCAP2L

Address:	RCAP2H	S:CBH
	RCAP2L	S:CAH
Reset State:		0000 0000B

Timer 2 Reload/Capture Registers. This register pair stores 16-bit values to be loaded into or captured from the timer register (TH2/TL2) in timer 2.

7 **0**

High/Low Byte of Timer 2 Reload/Capture Value

Bit Number	Bit Mnemonic	Function
7:0	RCAP2H.7:0	High byte of the timer 2 reload/recapture register
	RCAP2L.7:0	Low byte of the timer 2 reload/recapture register

RXCNTH, Address: S:E7H
RXCNTL S:E6H

Reset States:

Endpoint 1	RXCNTH	XXXX XX00B
	RXCNTL	0000 0000B
Endpoints 0, 2, 3	RXCNTL	XXX0 0000B

Receive FIFO Byte-count High and Low Registers. High and low register in a two-register ring buffer used to store the byte count for the data packets received in the receive FIFO specified by EPINDEX.

15 (RXCNT) Endpoint 1 **8**

—	—	—	—	—	—	BC9	BC8

7 (RXCNTL) **0**

BC7	BC6	BC5	BC4	BC3	BC2	BC1	BC0

7 (RXCNTL) Endpoints 0, 2, 3 **0**

—	—	—	BC4	BC3	BC2	BC1	BC0

Bit Number	Bit Mnemonic	Function
Endpoint 1 (*x* = 1)†		
15:10	—	Reserved. Write zeros to these bits.
9:0	BC9:0	Receive Byte Count. Ten-bit, ring buffer byte count register stores receive byte count (RXCNT) of 0 to 1023 bytes for endpoint 1 only.
Endpoints 0, 2, 3. (*x* = 0, 2, 3)†		
7:0	—	Reserved. Write zeros to these bits.
4:0	BC4:0	Receive Byte Count. Five-bit, ring buffer byte count register stores receive byte count (RXCNT) of 0 to 16 bytes for endpoints 0, 2, and 3.

† *x* = endpoint index. See the EPINDEX register.

RXCON

Address: S:E4H
Reset State: 0X00 0100B

Receive FIFO Control Register. Controls the receive FIFO specified by EPINDEX.

7							0
RXCLR	—	RXWS	RXFFRC	RXISO	ARM	ADVWM	REVWP

Bit Number	Bit Mnemonic	Function
7	RXCLR	Clear the Receive FIFO: Set this bit to flush the entire receive FIFO. All flags in RXFLG revert to their reset states (RXEMP is set; all other flags clear). The ARM, RXISO and RXWS bits in this register and the RXSEQ bit in the RXSTAT register are not affected by this operation. Hardware clears this bit when the flush operation is completed.
6	—	Reserved: Values read from this bit are indeterminate. Write zero to this bit.
5	RXWS	Receive FIFO Wait-state Read: At the 8X930A*x* core frequency of 12 MHz, not all instructions that access the receive FIFO are guaranteed to work due to critical paths inherent in the 8X930A*x* architecture.While all MOV instructions from the receive FIFO are guaranteed to work at 12 MHz, arithmetic instructions (e.g., ADD, SUB, etc.) where the receive FIFO is the source and the register file the destination may not work at this speed. For applications using arithmetic instructions, set the RXWS bit to read the receive FIFO with one wait state — this will eliminate the critical path. This bit is not reset when the RXCLR bit is set.
4	RXFFRC	FIFO Read Complete: Set this bit to release the receive FIFO when a data set read is complete. Setting this bit “clears” the RXFIF “bit” (in the RXFLG register) corresponding to the data set that was just read. Hardware clears this bit after the RXFIF bit is cleared. All data from this data set must have been read. Note that FIFO Read Complete only works if STOVW and EDOVW are cleared.
3	RXISO	Isochronous Data Type: Set this bit to indicate that the receive FIFO is programmed to receive isochronous data and to set up the USB Interface to handle an isochronous data transfer. This bit is not reset when the RXCLR bit is set; it must be cleared by software.

† The write marker and write pointer should only be controlled manually for testing (when the ARM bit is clear). At all other times the ARM bit should be set and the ADVWM and REVWP bits should be left alone.

RXCON

Address: S:E4H
Reset State: 0X00 0100B

Receive FIFO Control Register. Controls the receive FIFO specified by EPINDEX.

7							0
RXCLR	—	RXWS	RXFFRC	RXISO	ARM	ADVWM	REVWP

Bit Number	Bit Mnemonic	Function
2	ARM	Auto Receive Management: When set, the write pointer and write marker are adjusted automatically based on the following conditions: **RXISO** / **RX Status** / **Write Pointer** / **Write Marker** X / ACK / Unchanged / Advanced 0 / NAK / Reversed / Unchanged 1 / NAK / Unchanged / Advanced When this bit is set, setting REVWP or ADVWM has no effect. Hardware neither clears nor sets this bit. This is a sticky bit that is not reset when RXCLR is set. Note: This bit should always be set, except for testing.
1	ADVWM	Advance Write Marker: † (For non-ARM mode only) Set this bit to advance the write marker to the origin of the next data set. Advancing the write marker is used for back-to-back receptions. Hardware clears this bit after the write marker is advanced. Setting this bit is effective only when the REVWP, ARM and RXCLR bits are clear.
0	REVWP	Reverse Write Pointer: † (For non-ARM mode only) Set this bit to return the write pointer to the origin of the last data set received, as identified by the write marker. The FIU can then re-receive the last data packet and write to the receive FIFO starting from the same origin when the host re-sends the same data packet. Hardware clears this bit after the write pointer is reversed. Setting this bit is effective only when the ADVWM, ARM, and RXCLR bits are all clear. REVWP is used when a data packet is bad. When the function interface receives the data packet again, the write starts at the origin of the previous (bad) data set.

† The write marker and write pointer should only be controlled manually for testing (when the ARM bit is clear). At all other times the ARM bit should be set and the ADVWM and REVWP bits should be left alone.

RXDAT Address: S:E3H
Reset: XXXX XXXXB

Receive FIFO Data Register. Receive FIFO data specified by EPINDEX is stored and read from this register.

7							0
RXDAT.7:0							

Bit Number	Bit Mnemonic	Function
7:0	RXDAT.7:0	To write data to the receive FIFO, the FIU writes to this register. To read data from the receive FIFO, the 8X930A*x* reads from this register. The write pointer and read pointer are incremented automatically after a write and read, respectively.

RXFLG

Address: S:E5H
Reset State: 00XX 1000B

Receive FIFO Flag Register. These flags indicate the status of data packets in the receive FIFO specified by EPINDEX.

7							0
RXFIF1	RXFIF0	—	—	RXEMP	RXFULL	RXURF	RXOVF

Bit Number	Bit Mnemonic	Function
7:6	RXFIF[1:0]	Receive FIFO Index Flags: (read-only) These read-only flags indicate which data packets are present in the receive FIFO (see Table 7-6 on page 7-26). The RXFIF bits are updated after each write to RXCNT to reflect the addition of a data packet. Likewise, the RXFIF bits are cleared in sequence after each setting of the RXFFRC bit. The next-state table for RXFIF bits is shown below for operation in dual packet mode. **RXFIF[1:0] Operation Flag Next RXFIF[1:0] Next Flag** 00 Adv WM X 01 Unchanged 01 Adv WM X 01 Unchanged 10 Adv WM X 11 Unchanged 00 Set RXFFRC X 00 Unchanged 01 Set RXFFRC X 00 Unchanged 11 Set RXFFRC X 10/01 Unchanged 10 Set RXFFRC X 00 Unchanged XX Rev WP X Unchanged Unchanged When the receive FIFO is programmed to operate in single packet mode (RXSPM set in EPCON), valid RXFIF states are 00 and 01 only. In ISO mode, RXOVF, RXURF, and RXFIF are handled using the following rule: Firmware events cause status change immediately, while USB events cause status change only at SOF. RXFIF is "incremented" by the USB and "decremented" by firmware.Therefore, setting RXFFRC "decrements" RXFIF immediately. However, a successful USB transaction within a frame "increments" RXFIF only at SOF. For traceability, you must check the RXFIF flags before and after reads from the receive FIFO and the setting of RXFFRC in RXCON. NOTE: To simplify firmware development, it is recommended that you utilize control endpoints in single-packet mode only.
5:4	—	Reserved: Values read from these bits are indeterminate. Write zeros to these bits.
3	RXEMP	Receive FIFO Empty Flag (read-only): Hardware sets this flag when the write pointer is at the same location as the read pointer AND the write pointer equals the write marker and neither pointer has rolled over. Hardware clears the bit when the empty condition no longer exists. This is not a sticky bit and always tracks the current status of the receive FIFO, regardless of ISO or non-ISO mode.

RXFLG (Continued)

Address: S:E5H
Reset State: 00XX 1000B

Receive FIFO Flag Register. These flags indicate the status of data packets in the receive FIFO specified by EPINDEX.

7							0
RXFIF1	RXFIF0	—	—	RXEMP	RXFULL	RXURF	RXOVF

Bit Number	Bit Mnemonic	Function
2	RXFULL	Receive FIFO Full Flag (read-only): Hardware sets this flag when the write pointer has rolled over and equals the read pointer. Hardware clears the bit when the full condition no longer exists. This is not a sticky bit and always tracks the current status of the receive FIFO, regardless of ISO or non-ISO mode.
1	RXURF	Receive FIFO Underrun Flag. Hardware sets this bit when an additional byte is read from an empty receive FIFO or RXCNT. Hardware does **not** clear the bit, so you must clear it in firmware. When the receive FIFO underruns, the read pointer will not advance — it remains locked in the empty position. n ISO mode, RXOVF, RXURF, and RXFIF are handled using the following rule: Firmware events cause status change immediately, while USB events cause status change only at SOF. Since underrun can only be caused by firmware, RXURF is updated immediately. You must check the RXURF flag after reads from the receive FIFO before setting the RXFFRC bit in RXCON. NOTE: When this bit is set, the FIFO is in an unknown state. It is recommended that you reset the FIFO in the error management routine using the RXCLR bit in the RXCON register.
0	RXOVF	Receive FIFO Overrun Flag. This bit is set when the FIU writes an additional byte to a full receive FIFO or writes a byte count to RXCNT with FIF1:0 = 11. This is a sticky bit that must be cleared through software, although it can be cleared by hardware if a SETUP packet is received after an RXOVF error had already occurred. When this bit is set, the FIFO is in an unknown state, thus it is recommended that you reset the FIFO in the error management routine using the RXCLR bit in the RXCON register. When the receive FIFO overruns, the write pointer will not advance — it remains locked in the full position. n ISO mode, RXOVF, RXURF, and RXFIF are handled using the following rule: Firmware events cause status change immediately, while USB events cause status change only at SOF. Since overrun can only be caused by the USB, RXOVF is updated only at the next SOF regardless of where the overrun occurred during the current frame.

RXSTAT

Address: S:E2H
Reset State: 0000 0000B

Endpoint Receive Status Register. Contains the current endpoint status of the receive FIFO specified by EPINDEX.

7							0
RXSEQ	RXSETUP	STOVW	EDOVW	RXSOVW	RXVOID	RXERR	RXACK

Bit Number	Bit Mnemonic	Function
7	RXSEQ	Receiver Endpoint Sequence Bit (read, conditional write): This bit will be toggled on completion of an ACK handshake in response to an OUT token. This bit will be set (or cleared) by hardware after reception of a SETUP token. This bit can be written by firmware if the RXSOVW bit is set when written together with the new RXSEQ value. † Note: Always verify this bit after writing to ensure that there is no conflict with hardware, which could occur if a new SETUP token is received.
6	RXSETUP	Received Setup Token: This bit is set by hardware when a valid SETUP token has been received. When set, this bit causes received IN or OUT tokens to be NAKed until the bit is cleared to allow proper data management for the transmit and receive FIFOs from the previous transaction. IN or OUT tokens are NAKed even if the endpoint is stalled (RXSTL or TXSTL) to allow a control transaction to clear a stalled endpoint. Clear this bit upon detection of a SETUP token after the firmware is ready to complete the status stage of a control transaction.
5	STOVW	Start Overwrite Flag (read-only): Set by hardware upon receipt of a SETUP token for any control endpoint to indicate that the receive FIFO is being overwritten with new SETUP data. When set, the FIFO state (FIF and read pointer) resets and is locked for this endpoint until EDOVW is set. This prevents a prior, ongoing firmware read from corrupting the read pointer as the receive FIFO is being cleared and new data is being written into it. This bit is cleared by hardware during the handshake phase of the setup stage. This bit is only used for control endpoints.
4	EDOVW	End Overwrite Flag: This flag is set by hardware during the handshake phase of a SETUP stage. It is set after every SETUP packet is received and *must* be cleared prior to reading the contents of the FIFO. When set, the FIFO state (FIF and read pointer) remains locked for this endpoint until this bit is cleared. This prevents a prior, ongoing firmware read from corrupting the read pointer after the new data has been written into the receive FIFO. This bit is only used for control endpoints.

† Under normal operation, this bit should not be modified by the user.

†† The SIE will handle all sequential bit tracking. This bit should only be used when initializing a new configuration or interface.

RXSTAT (Continued)

Address: S:E2H
Reset State: 0000 0000B

Endpoint Receive Status Register. Contains the current endpoint status of the receive FIFO specified by EPINDEX.

7							0
RXSEQ	RXSETUP	STOVW	EDOVW	RXSOVW	RXVOID	RXERR	RXACK

Bit Number	Bit Mnemonic	Function
3	RXSOVW	Receive Data Sequence Overwrite Bit: Write a ‘1’ to this bit to allow the value of the RXSEQ bit to be overwritten. This is needed to clear a STALL on a control endpoint. Writing a ‘0’ to this bit has no effect on RXSEQ. This bit always returns ‘0’ when read. †, ††
2	RXVOID	Receive Void Condition (read-only): This bit is set when no valid data is received in response to a SETUP or OUT token due to one of the following conditions: 1. The receive FIFO is still locked. 2. The EPCON register’s RXSTL bit is set for a non-control endpoint. This bit is set and cleared by hardware. For non-isochronous transactions, this bit is updated by hardware at the end of the transaction in respond to a valid OUT token. For isochronous transactions, it is not updated until the next SOF.
1	RXERR	Receive Error (read-only): Set when an error condition has occurred with the reception. Complete or partial data has been written into the receive FIFO. No handshake is returned. The error can be one of the following conditions: 1. Data failed CRC check. 2. Bit stuffing error. 3. A receive FIFO goes into overrun or underrun condition while receiving. This bit is updated by hardware at the end of a valid SETUP or OUT token transaction (non-isochronous) or at the next SOF on each valid OUT token transaction (isochronous). The corresponding FRXD*x* bit of FIFLG is set when active. This bit is updated with the RXACK bit at the end of data reception and is mutually exclusive with RXACK.
0	RXACK	Receive Acknowledged (read-only): This bit is set when data is received completely into a receive FIFO and an ACK handshake is sent. This read-only bit is updated by hardware at the end of a valid SETUP or OUT token transaction (non-isochronous) or at the next SOF on each valid OUT token transaction (isochronous). The corresponding FRXD*x* bit of FIFLG is set when active. This bit is updated with the RXERR bit at the end of data reception and is mutually exclusive with RXERR.

† Under normal operation, this bit should not be modified by the user.

†† The SIE will handle all sequential bit tracking. This bit should only be used when initializing a new configuration or interface.

SADDR

Address: S:A9H
Reset State: 0000 0000B

Slave Individual Address Register. SADDR contains the device's individual address for multiprocessor communication.

7 **0**

Slave Individual Address

Bit Number	Bit Mnemonic	Function
7:0	SADDR.7:0	

SADEN

Address: S:B9H
Reset State: 0000 0000B

Mask Byte Register. This register masks bits in the SADDR register to form the device's given address for multiprocessor communication.

7 **0**

Mask for SADDR

Bit Number	Bit Mnemonic	Function
7:0	SADEN.7:0	

SBUF

Address: S:99H
Reset State: XXXX XXXXB

Serial Data Buffer. Writing to SBUF loads the transmit buffer of the serial I/O port. Reading SBUF reads the receive buffer of the serial I/O port.

7 **0**

Data Sent/Received by Serial I/O Port

Bit Number	Bit Mnemonic	Function
7:0	SBUF.7:0	

SCON

Address: S:98H
Reset State: 0000 0000B

Serial Port Control Register. SCON contains serial I/O control and status bits, including the mode select bits and the interrupt flag bits.

7							0
FE/SM0	SM1	SM2	REN	TB8	RB8	TI	RI

Bit Number	Bit Mnemonic	Function
7	FE	Framing Error Bit: To select this function, set the SMOD0 bit in the PCON register. Set by hardware to indicate an invalid stop bit. Cleared by software, not by valid frames.
	SM0	Serial Port Mode Bit 0: To select this function, clear the SMOD0 bit in the PCON register. Software writes to bits SM0 and SM1 to select the serial port operating mode. Refer to the SM1 bit for the mode selections.
6	SM1	Serial Port Mode Bit 1: Software writes to bits SM1 and SM0 (above) to select the serial port operating mode. **SM0 SM1 Mode Description Baud Rate** 0 0 0 Shift register $F_{OSC}/12$ 0 1 1 8-bit UART Variable 1 0 2 9-bit UART $F_{OSC}/32^{\dagger}$ or $F_{OSC}/64^{\dagger}$ 1 1 3 9-bit UART Variable †Select by programming the SMOD bit in the PCON register (see section “Baud Rates” on page 12-10).
5	SM2	Serial Port Mode Bit 2: Software writes to bit SM2 to enable and disable the multiprocessor communication and automatic address recognition features. This allows the serial port to differentiate between data and command frames and to recognize slave and broadcast addresses.
4	REN	Receiver Enable Bit: To enable reception, set this bit. To enable transmission, clear this bit.
3	TB8	Transmit Bit 8: In modes 2 and 3, software writes the ninth data bit to be transmitted to TB8. Not used in modes 0 and 1.
2	RB8	Receiver Bit 8: Mode 0: Not used. Mode 1 (SM2 clear): Set or cleared by hardware to reflect the stop bit received. Modes 2 and 3 (SM2 set): Set or cleared by hardware to reflect the ninth data bit received.

SCON (Continued)

Address: S:98H
Reset State: 0000 0000B

Serial Port Control Register. SCON contains serial I/O control and status bits, including the mode select bits and the interrupt flag bits.

7 **0**

FE/SM0	SM1	SM2	REN	TB8	RB8	TI	RI

Bit Number	Bit Mnemonic	Function
1	TI	Transmit Interrupt Flag Bit: Set by the transmitter after the last data bit is transmitted. Cleared by software.
0	RI	Receive Interrupt Flag Bit: Set by the receiver after the last data bit of a frame has been received. Cleared by software.

SOFH

Address: S:D3H
Reset State: 0000 0000B

Start of Frame High Register. Contains isochronous data transfer enable and interrupt bits and the upper three bits of the 11-bit time stamp received from the host.

7							0
SOFACK	ASOF	SOFIE	FTLOCK	SOFODIS	TS10	TS9	TS8

Bit Number	Bit Mnemonic	Function
7	SOFACK	SOF Token Received without Error (read-only): When set, this bit indicates that the 11-bit time stamp stored in SOFL and SOFH is valid. This bit is updated every time a SOF token is received from the USB bus, and it is cleared when an artificial SOF is generated by the frame timer. This bit is set and cleared by hardware.
6	ASOF	Any Start-of-Frame: This bit is set by hardware to indicate that a new frame has started. The interrupt can result either from reception of an actual SOF packet or from an artificially-generated SOF from the frame timer. This interrupt is asserted in hardware even if the frame timer is not locked to the USB bus frame timing. When set, this bit is an indication that either an actual SOF packet was received or an artificial SOF was generated by the frame timer. This bit must be cleared by software or inverted and driven to the SOF# pin. The effect of setting this bit by software is the same as hardware: the external pin will be driven with an inverted ASOF value for eight T_{CLK}s. This bit also serves as the SOF interrupt flag. This interrupt is only asserted in hardware if the SOF interrupt is enabled (SOFIE set) and the interrupt channel is enabled.
5	SOFIE	SOF Interrupt Enable: When this bit is set, setting the ASOF bit causes an interrupt request to be generated if the interrupt channel is enabled. Hardware reads but does not write this bit.
4	FTLOCK	Frame Timer Locked (read-only): When set, this bit indicates that the frame timer is presently locked to the USB bus' frame time. When cleared, this bit indicates that the frame timer is attempting to synchronize to the frame time.
3	SOFODIS	SOF# Pin Output Disable: When set, no low pulse will be driven to the SOF# pin in response to setting the ASOF bit. The SOF# pin will be driven to '1' when SOFODIS is set. When this bit is clear, setting the ASOF bit causes the SOF# pin to be toggled with a low pulse for eight T_{CLK}s.
2:0	TS10:8	Time stamp received from host: TS10:8 are the upper three bits of the 11-bit frame number issued with an SOF token. This time stamp is valid only if the SOFACK bit is set.

SOFL

Address: S:D2H
Reset State: 0000 0000B

Start-of-Frame Low Register. Contains the lower eight bits of the 11-bit time stamp received from the host.

7							0
TS7:0							

Bit Number	Bit Mnemonic	Function
7:0	TS7:0	Time stamp received from host: This time stamp is valid only if the SOFACK bit in the SOFH register is set. TS7:0 are the lower eight bits of the 11-bit frame number issued with a SOF token. IF an artificial SOF is generated, the time stamp remains at its previous value and it is up to firmware to update it. These bits are set and cleared by hardware.

SP

Address: S:81H
Reset State: 0000 0111B

Stack Pointer. SP provides SFR access to location 63 in the register file (also named SP). SP is the lowest byte of the extended stack pointer (SPX = DR60). The extended stack pointer points to the current top of stack. When a byte is saved (PUSHed) on the stack, SPX is incremented, and then the byte is written to the top of stack. When a byte is retrieved (POPped) from the stack, it is copied from the top of stack, and then SPX is decremented.

7							**0**
SP Contents							

Bit Number	Bit Mnemonic	Function
7:0	SP.7:0	Stack Pointer: Bits 0–7 of the extended stack pointer, SPX (DR60).

SPH

Address: S:BEH
Reset State: 0000 0000B

Stack Pointer High. SPH provides SFR access to location 62 in the register file (also named SPH). SPH is the upper byte of the lower word of DR60, the extended stack pointer (SPX). The extended stack pointer points to the current top of stack. When a byte is saved (PUSHed) on the stack, SPX is incremented, and then the byte is written to the top of stack. When a byte is retrieved (POPped) from the stack, it is copied from the top of stack, and then SPX is decremented.

7							0
SPH Contents							

Bit Number	Bit Mnemonic	Function
7:0	SPH.7:0	Stack Pointer High: Bits 8–15 of the extended stack pointer, SPX (DR(60)).

T2CON

Address: S:C8H
Reset State: 0000 0000B

Timer 2 Control Register. Contains the receive clock, transmit clock, and capture/reload bits used to configure timer 2. Also contains the run control bit, counter/timer select bit, overflow flag, external flag, and external enable for timer 2.

7							0
TF2	EXF2	RCLK	TCLK	EXEN2	TR2	C/T2#	CP/RL2#

Bit Number	Bit Mnemonic	Function
7	TF2	Timer 2 Overflow Flag: Set by timer 2 overflow. Must be cleared by software. TF2 is not set if RCLK = 1 or TCLK = 1.
6	EXF2	Timer 2 External Flag: If EXEN2 = 1, capture or reload caused by a negative transition on T2EX sets EFX2. EXF2 does not cause an interrupt in up/down counter mode (DCEN = 1).
5	RCLK	Receive Clock Bit: Selects timer 2 overflow pulses (RCLK = 1) or timer 1 overflow pulses (RCLK = 0) as the baud rate generator for serial port modes 1 and 3.
4	TCLK	Transmit Clock Bit: Selects timer 2 overflow pulses (TCLK = 1) or timer 1 overflow pulses (TCLK = 0) as the baud rate generator for serial port modes 1 and 3.
3	EXEN2	Timer 2 External Enable Bit: Setting EXEN2 causes a capture or reload to occur as a result of a negative transition on T2EX unless timer 2 is being used as the baud rate generator for the serial port. Clearing EXEN2 causes timer 2 to ignore events at T2EX.
2	TR2	Timer 2 Run Control Bit: Setting this bit starts the timer.
1	C/T2#	Timer 2 Counter/Timer Select: C/T2# = 0 selects timer operation: timer 2 counts the divided-down system clock. C/T2# = 1 selects counter operation: timer 2 counts negative transitions on external pin T2.
0	CP/RL2#	Capture/Reload Bit: When set, captures occur on negative transitions at T2EX if EXEN2 = 1. When cleared, auto-reloads occur on timer 2 overflows or negative transitions at T2EX if EXEN2 = 1. The CP/RL2# bit is ignored and timer 2 forced to auto-reload on timer 2 overflow, if RCLK = 1 or TCLK = 1.

T2MOD

Address: S:C9H
Reset State: XXXX XX00B

Timer 2 Mode Control Register. Contains the timer 2 down count enable and clock-out enable bits for timer 2 .

7							0
—	—	—	—	—	—	T2OE	DCEN

Bit Number	Bit Mnemonic	Function
7:2	—	Reserved: Values read from these bits are indeterminate. Write zeros to these bits.
1	T2OE	Timer 2 Output Enable Bit: In the timer 2 clock-out mode, connects the programmable clock output to external pin T2.
0	DCEN	Down Count Enable Bit: Configures timer 2 as an up/down counter.

TCON

Address: S:88H
Reset State: 0000 0000B

Timer/Counter Control Register. Contains the overflow and external interrupt flags and the run control and interrupt transition select bits for timer 0 and timer 1.

7 **0**

TF1	TR1	TF0	TR0	IE1	IT1	IE0	IT0

Bit Number	Bit Mnemonic	Function
7	TF1	Timer 1 Overflow Flag: Set by hardware when the timer 1 register overflows. Cleared by hardware when the processor vectors to the interrupt routine.
6	TR1	Timer 1 Run Control Bit: Set/cleared by software to turn timer 1 on/off.
5	TF0	Timer 0 Overflow Flag: Set by hardware when the timer 0 register overflows. Cleared by hardware when the processor vectors to the interrupt routine.
4	TR0	Timer 0 Run Control Bit: Set/cleared by software to turn timer 1 on/off.
3	IE1	Interrupt 1 Flag: Set by hardware when an external interrupt is detected on the INT1# pin. Edge- or level- triggered (see IT1). Cleared when interrupt is processed if edge-triggered.
2	IT1	Interrupt 1 Type Control Bit: Set this bit to select edge-triggered (high-to-low) for external interrupt 1. Clear this bit to select level-triggered (active low).
1	IE0	Interrupt 1 Flag: Set by hardware when an external interrupt is detected on the INT0# pin. Edge- or level- triggered (see IT0). Cleared when interrupt is processed if edge-triggered.
0	IT0	Interrupt 0 Type Control Bit: Set this bit to select edge-triggered (high-to-low) for external interrupt 0. Clear this bit to select level-triggered (active low).

TMOD

Address: S:89H
Reset State: 0000 0000B

Timer/Counter Mode Control Register. Contains mode select, run control select, and counter/timer select bits for controlling timer 0 and timer 1.

7 **0**

GATE1	C/T1#	M11	M01	GATE0	C/T0#	M10	M00

Bit Number	Bit Mnemonic	Function
7	GATE1	Timer 1 Gate: When GATE1 = 0, run control bit TR1 gates the input signal to the timer register. When GATE1 = 1 and TR1 = 1, external signal INT1 gates the timer input.
6	C/T1#	Timer 1 Counter/Timer Select: C/T1# = 0 selects timer operation: timer 1 counts the divided-down system clock. C/T1# = 1 selects counter operation: timer 1 counts negative transitions on external pin T1.
5, 4	M11, M01	Timer 1 Mode Select: **M11 M01** 0 0 Mode 0: 8-bit timer/counter (TH1) with 5-bit prescalar (TL1) 0 1 Mode 1: 16-bit timer/counter 1 0 Mode 2: 8-bit auto-reload timer/counter (TL1). Reloaded from TH1 at overflow. 1 1 Mode 3: Timer 1 halted. Retains count.
3	GATE0	Timer 0 Gate: When GATE0 = 0, run control bit TR0 gates the input signal to the timer register. When GATE0 = 1 and TR0 = 1, external signal INT0 gates the timer input.
2	C/T0#	Timer 0 Counter/Timer Select: C/T0# = 0 selects timer operation: timer 0 counts the divided-down system clock. C/T0# = 1 selects counter operation: timer 0 counts negative transitions on external pin T0.
1, 0	M10, M00	Timer 0 Mode Select: **M10 M00** 0 0 Mode 0: 8-bit timer/counter (T0) with 5-bit prescalar (TL0) 0 1 Mode 1: 16-bit timer/counter 1 0 Mode 2: 8-bit auto-reload timer/counter (TL0). Reloaded from TH0 at overflow. 1 1 Mode 3: TL0 is an 8-bit timer/counter. TH0 is an 8-bit timer using timer 1's TR1 and TF1 bits.

TH0, TL0

Address:	TH0	S:8CH
	TL0	S:8AH
Reset State:		0000 0000B

TH0, TL0 Timer Registers. These registers operate in cascade to form the 16-bit timer register in timer 0 or separately as 8-bit timer/counters.

7	0
High/Low Byte of Timer 0 Register	

Bit Number	Bit Mnemonic	Function
7:0	TH0.7:0 TL0.7:0	High byte of the timer 0 timer register. Low byte of the timer 0 timer register.

TH1, TL1

Address:	TH1	S:8DH
	TL1	S:8BH
Reset State:		0000 0000B

TH1, TL1 Timer Registers. These registers operate in cascade to form the 16-bit timer register in timer 1 or separately as 8-bit timer/counters.

7	0
High/Low Byte of Timer 1 Register	

Bit Number	Bit Mnemonic	Function
7:0	TH1.7:0 TL1.7:0	High byte of the timer 1 timer register. Low byte of the timer 1 timer register.

TH2, TL2

Address:	TH2	S:CDH
	TL2	S:CCH
Reset State:		0000 0000B

TH2, TL2 Timer Registers. These registers operate in cascade to form the 16-bit timer register in timer 2.

7	**0**
High/Low Byte of Timer 2 Register	

Bit Number	Bit Mnemonic	Function
7:0	TH2.7:0 TL2.7:0	High byte of the timer 2 timer register. Low byte of the timer 2 timer register.

TXCNTH, Address: S:F7H
TXCNTL S:F6H

Reset States:			
	Endpoint 1	TXCNTH	XXXX XX00B
		TXCNTL	0000 0000B
	Endpoints 0, 2, 3	TXCNTL	XXX0 0000B

Transmit FIFO Byte-count High and Low Registers. High and low register in a two-register ring buffer used to store the byte count for the data packets in the transmit FIFO specified by EPINDEX. Note that TXCNTH exists only for function endpoint 1 and is unavailable for all other endpoints. During normal operations, these registers should only be written by the 8X930A*x* CPU.

15 (TXCNTH) Endpoint 1 **8**

—	—	—	—	—	—	BC9	BC8

7 (TXCNTL) **0**

BC7	BC6	BC5	BC4	BC3	BC2	BC1	BC0

7 (TXCNTL) Endpoints 0, 2, 3 **0**

—	—	—	BC4	BC3	BC2	BC1	BC0

Bit Number	Bit Mnemonic	Function
Endpoint 1 (*x* = 1)†		
15:10	—	Reserved. Write zeros to these bits.
9:0	BC9:0	Transmit Byte Count. Ten-bit, ring buffer byte count register stores transmit byte count (TXCNT) of 0 to 1023 bytes for endpoint 1 only.
Endpoints 0, 2, 3. (*x* = 0, 2, 3)†		
7:0	—	Reserved. Write zeros to these bits.
4:0	BC4:0	Transmit Byte Count. Five-bit, ring buffer byte count register stores transmit byte count (TXCNT) of 0 to 16 bytes for endpoints 0, 2, and 3.

† *x* = endpoint index. See the EPINDEX register.

NOTE: To send a status stage after a CNTL write or no data control command or a null packet, write 0 to TXCNT.

TXCON

Address:		S:F4H
Reset State:	$x = 1^{\dagger}$	000X 0100B
	$x = 0, 2, 3^{\dagger}$	0XXX 0100B

USB Transmit FIFO Control Register. Controls the transmit FIFO specified by EPINDEX.

7 0

TXCLR	FFSZ.1	FFSZ.0	—	TXISO	ATM	ADVRM	REVRP

Bit Number	Bit Mnemonic	Function
7	TXCLR	Transmit Clear: Setting this bit flushes the transmit FIFO, sets the EMPTY bit in TXFLG, and clears all other bits in TXFLG. After the flush, hardware clears this bit. Setting this bit does not affect the ATM, TXISO, and FFSZ bits.
6:5	FFSZ[1:0]	FIFO Size: These two bits are used for FIFO size configuration by function endpoint 1 only. The endpoint 1 FIFO size configurations (in bytes) are: **FFSZ[1:0] Transmit Size Receive Size** 00 256 256 01 512 512 10 1024 0 11 0 1024 These bits are not reset when the TXCLR bit is set in the TXCON register. NOTE: The receive FIFO size is also set by the TXCON FFSZ bits. Therefore, there are no corresponding FFSZ bits in RXCON.
4	—	Reserved: Values read from this bit are indeterminate. Write zero to this bit.
3	TXISO	Transmit Isochronous Data: Software sets this bit to indicate that the transmit FIFO contains isochronous data. The FIU uses this bit to set up the handshake protocol at the end of a transmission. This bit is not reset when TXCLR is set and must be cleared by software.

† *x* = endpoint index. See EPINDEX.

†† The read marker and read pointer should only be controlled manually for testing (when the ATM bit is clear). At all other times the ATM bit should be set and the ADVRM and REVRP bits should be left alone.

TXCON (Continued)

Address:		S:F4H
Reset State:	*x* = 1†	000X 0100B
	x = 0, 2, 3†	0XXX 0100B

USB Transmit FIFO Control Register. Controls the transmit FIFO specified by EPINDEX.

7 0

TXCLR	FFSZ.1	FFSZ.0	—	TXISO	ATM	ADVRM	REVRP

Bit Number	Bit Mnemonic	Function
2	ATM	Automatic Transmit Management: Setting this bit (the default value) causes the read pointer and read marker to be adjusted automatically as indicated: **ISO** **TX Status** **Read Pointer** **Read Marker** X ACK Unchanged Advanced* 0 NAK Reversed** Unchanged 1 NAK Unchanged Advanced* * to origin of next data set ** to origin of the data set last read When this bit is set, setting REVRP or ADVRM has no effect. This is a sticky bit that is not reset when TXCLR is set, but can be set and cleared by software. Hardware neither clears nor sets this bit. Note: This bit should always be set, except for testing.
1	ADVRM	Advance Read Marker Control (non-ATM mode only) ††: Setting this bit advances the read marker to point to the origin of the next data packet (the position of the read pointer) to prepare for the next packet transmission. Hardware clears this bit after the read marker is advanced. Setting this bit is effective only when the REVRP, ATM, and TXCLR bits are all clear.
0	REVRP	Reverse Read Pointer Control (non-ATM mode only) ††: In the case of bad transmission, the same data stack may need to be available for retransmit. Setting this bit reverses the read pointer to point to the origin of the last data set (the position of the read marker) so that the FIU can reread the last set for retransmission. Hardware clears this bit after the read pointer is reversed. Setting this bit is effective only when the ADVRM, ATM, and TXCLR bits are all clear.

† *x* = endpoint index. See EPINDEX.

†† The read marker and read pointer should only be controlled manually for testing (when the ATM bit is clear). At all other times the ATM bit should be set and the ADVRM and REVRP bits should be left alone.

TXDAT

Address: S:F3H
Reset State: XXXX XXXXB

USB Transmit FIFO Data Register. Data from the transmit FIFO specified by EPINDEX is written to and stored in this register.

7							0
Transmit Data Byte							

Bit Number	Bit Mnemonic	Function
7:0	TXDAT[7:0]	Transmit Data Byte (write-only)†: To write data to the transmit FIFO, write to this register. The write pointer and read pointer are incremented automatically after a write and read respectively.

† This register *can* be read by firmware, but it should only be read if FIF1:0 ≠ 00.

TXFLG

Address: S:F5H
Reset State: 00XX 1000B

Transmit FIFO Flag Register. These flags indicate the status of data packets in the transmit FIFO specified by EPINDEX.

7							0
TXFIF1	TXFIF0	—	—	TXEMP	TXFULL	TXURF	TXOVF

Bit Number	Bit Mnemonic	Function
7:6	TXFIF[1:0]	FIFO Index Flags (read-only): These flags indicate which data sets are present in the transmit FIFO. The FIF bits are set in sequence after each write to TXCNT to reflect the addition of a data set. Likewise, TXFIF1 and TXFIF0 are cleared in sequence after each advance of the read marker to indicate that the set is effectively discarded. The bit is cleared whether the read marker is advanced by software (setting ADVRM) or automatically by hardware (ATM = 1). The next-state table for the TXFIF bits is shown below: **TXFIF[1:0] / Operation / Flag / Next TXFIF[1:0] / Next Flag** 00 / Wr TXCNT / X / 01 / Unchanged 01 / Wr TXCNT / X / 11 / Unchanged 10 / Wr TXCNT / X / 11 / Unchanged 11 / Wr TXCNT / X / 11 / TXOVF = 1 00 / Adv RM / X / 00 / Unchanged 01 / Adv RM / X / 00 / Unchanged 11 / Adv RM / X / 10/01 / Unchanged 10 / Adv RM / X / 00 / Unchanged XX / Rev RP / X / Unchanged / Unchanged In ISO mode, TXOVF, TXURF, and TXFIF are handled using the following rule: Firmware events cause status change immediately, while USB events cause status change only at SOF. TXFIF is "incremented" by firmware and "decremented" by the USB.Therefore, writes to TXCNT "increment" TXFIF immediately. However, a successful USB transaction any time within a frame "decrements" TXFIF only at SOF. You must check the TXFIF flags before and after writes to the transmit FIFO and TXCNT for traceability. NOTE: To simplify firmware development, configure control endpoints in single-packet mode.
5:4	—	Reserved: Values read from these bits are indeterminate. Write zeros to these bits.
3	TXEMP	Transmit FIFO Empty Flag (read-only): Hardware sets this bit when the write pointer has not rolled over and is at the same location as the read pointer. Hardware clears this bit when the pointers are at different locations. Regardless of ISO or non-ISO mode, this bit always tracks the current transmit FIFO status.

† When set, all transmissions are NAKed.

TXFLG (Continued)

Address: S:F5H
Reset State: 00XX 1000B

Transmit FIFO Flag Register. These flags indicate the status of data packets in the transmit FIFO specified by EPINDEX.

7							0
TXFIF1	TXFIF0	—	—	TXEMP	TXFULL	TXURF	TXOVF

Bit Number	Bit Mnemonic	Function
2	TXFULL	Transmit FIFO Full Flag (read-only): Hardware sets this bit when the write pointer has rolled over and equals the read marker. Hardware clears this bit when the full condition no longer exists. Regardless of ISO or non-ISO mode, this bit always tracks the current transmit FIFO status. Check this bit to avoid causing a TXOVF condition.
1	TXURF	Transmit FIFO Underrun Flag: Hardware sets this flag when an additional byte is read from an empty transmit FIFO or TXCNT [This is caused when the value written to TXCNT is greater than the number of bytes written to TXDAT.]. This is a sticky bit that must be cleared through software. When this flag is set, the FIFO is in an unknown state, thus it is recommended that you reset the FIFO in your error management routine using the TXCLR bit in TXCON. When the transmit FIFO underruns, the read pointer will not advance — it remains locked in the empty position.† In ISO mode, TXOVF, TXURF, and TXFIF are handled using the following rule: Firmware events cause status change immediately, while USB events cause status change only at SOF. Since underrun can only be caused by USB, TXURF is updated at the next SOF regardless of where the underrun occurs in the frame.
0	TXOVF	Transmit FIFO Overrun Flag: This bit is set when an additional byte is written to a full FIFO or full TXCNT with TXFIF1:0 = 11. This is a sticky bit that must be cleared through software. When this bit is set, the FIFO is in an unknown state, thus it is recommended that you reset the FIFO in your error management routine using the TXCLR bit in TXCON. When the receive FIFO overruns, the write pointer will not advance — it remains locked in the full position. Check this bit after loading the FIFO prior to writing the byte count register.† In ISO mode, TXOVF, TXURF, and TXFIF are handled using the following rule: Firmware events cause status change immediately, while USB events cause status change only at SOF. Since overrun can only be caused by firmware, TXOVF is updated immediately. Check the TXOVF flag after writing to the transmit FIFO before writing to TXCNT.

† When set, all transmissions are NAKed.

TXSTAT

Address: S:F2H
Reset State: 0000 0000B

Endpoint Transmit Status Register. Contains the current endpoint status of the transmit FIFO specified by EPINDEX.

7							0
TXSEQ	—	—	TXFLUSH	TXSOVW	TXVOID	TXERR	TXACK

Bit Number	Bit Mnemonic	Function
7	TXSEQ	Transmitter's Current Sequence Bit (read, conditional write): This bit will be transmitted in the next PID and toggled on a valid ACK handshake. This bit is toggled by hardware on a valid SETUP token. This bit can be written by firmware if the TXSOVW bit is set when written together with the new TXSEQ value.†
6:5	—	Reserved: Values read from these bits are indeterminate. Write zeros to these bits.
4	TXFLUSH	Transmit FIFO Packet Flushed: When set, this bit indicates that hardware flushed a stale ISO data packet from the transmit FIFO due to a TXFIF = '11' at SOF. This bit is set by hardware, but can also be set by software with the same effect.†
3	TXSOVW	Transmit Data Sequence Overwrite Bit: Write a '1' to this bit to allow the value of the TXSEQ bit to be overwritten. Writing a '0' to this bit has no effect on TXSEQ. This bit always returns '0' when read.†, ††
2	TXVOID	Transmit Void (read-only): A void condition has occurred in response to a valid IN token. Transmit void is closely associated with the NAK/STALL handshake returned by function after a valid IN token, due to the conditions that cause the transmit FIFO to be unenabled or not ready to transmit. Use this bit to check any NAK/STALL handshake ever returned by function. This bit does not affect the FTXD*x*, TXERR or TXACK bits. This bit is updated by hardware at the end of a non-isochronous transaction in response to a valid IN token. For isochronous transactions, this bit is not updated until the next SOF.

† Under normal operation, this bit should not be modified by the user.

†† The SIE will handle all sequential bit tracking. This bit should only be used when initializing a new configuration or interface.

TXSTAT (Continued)

Address: S:F2H
Reset State: 0000 0000B

Endpoint Transmit Status Register. Contains the current endpoint status of the transmit FIFO specified by EPINDEX.

7							0
TXSEQ	—	—	TXFLUSH	TXSOVW	TXVOID	TXERR	TXACK

Bit Number	Bit Mnemonic	Function
1	TXERR	Transmit Error (read-only): An error condition has occurred with the transmission. Complete or partial data has been transmitted. The error can be one of the following: 1. Data transmitted successfully but no handshake received. 2. Transmit FIFO goes into underrun condition while transmitting. The corresponding transmit done bit (FTXD*x* in FIFLG) is set when active. For non-isochronous transactions, this bit is updated by hardware together with the TXACK bit at the end of the data transmission (this bit is mutually exclusive with TXACK). For isochronous transactions, this bit is not updated until the next SOF.
0	TXACK	Transmit Acknowledge (read-only): Data transmission completed and acknowledged successfully. The corresponding transmit done bit (FTXD*x* in FIFLG) is set when active. For non-isochronous transactions, this bit is updated by hardware together with the TXERR bit at the end of data transmission (this bit is mutually exclusive with TXERR). For isochronous transactions, this bit is not updated until the next SOF.

† Under normal operation, this bit should not be modified by the user.

†† The SIE will handle all sequential bit tracking. This bit should only be used when initializing a new configuration or interface.

WDTRST

Address: S:A6H
Reset State: XXXX XXXXB

Watchdog Timer Reset Register. Writing the two-byte sequence 1EH-E1H to the WDTRST register clears and enables the hardware WDT. The WDTRST register is a write-only register. Attempts to read it return FFH. The WDT itself is not read or write accessible. See Chapter 10, “Timer/Counters and WatchDog Timer.”

7	0
WDTRST Contents (Write-only)	

Bit Number	Bit Mnemonic	Function
7:0	WDTRST.7:0	Provides user control of the hardware WDT.

D

Data Flow Model

APPENDIX D
DATA FLOW MODEL

This appendix describes the data flow model for the 8X930A*x* USB transactions. This data flow model, presented in truth table form, is intended to bridge the hardware and firmware layers of the 8X930A*x*. It describes the behavior of the 8X930A*x* in response to a particular USB event, given a known state/configuration.

The types of data transfer supported by the 8X930A*x* are:

- Non-isochronous transfer (interrupt, bulk)
- Isochronous transfer
- Control Transfer

Table D-1. Non-isochronous Transmit Data Flow

TXFIF (1:0)	Event	New TXFIF (1:0)	TX ERR	TX ACK	TX Void	TX OVF (1)	TX URF (1)	TX Inter-rupt	USB Response	Comments
00	Received IN token, but no data or TXOE = 0	00	no chg	no chg	1	no chg	no chg	None	NAK	No data was loaded, so NAK
	Received IN token, RXSETUP = 1	00	no chg	no chg	1	no chg	no chg	None	NAK	Control endpoint only. Endpoint will NAK when RXSETUP = 1 even if TXSTL = 1
	Data loaded into FIFO from CPU, CNT written	01	no chg	no chg	no chg	no chg	no chg	None	N/A	Software should always check TXFIF bits before loading and TXOVF after loading.
	Data loaded into FIFO, FIFO error occurs	00	no chg	no chg	no chg	1	no chg	None	NAKs future trans-actions	Only overrun FIFO error can occur here. Software should always check TXOVF before write CNT.

NOTES:

1. These are sticky bits, which must be cleared by firmware. Also, this table assumes TXEPEN and ATM are enabled.
2. Future transactions are NAKed even if the transmit endpoint is stalled when RXSETUP = 1.

Table D-1. Non-isochronous Transmit Data Flow (Continued)

TXFIF (1:0)	Event	New TXFIF (1:0)	TX ERR	TX ACK	TX Void	TX OVF (1)	TX URF (1)	TX Inter-rupt	USB Response	Comments
01/10	Received IN token, data transmitted, host ACKs	00	0	1	0	no chg	no chg	Set transmit interrupt	Send data	ACK received, so no errors. Read marker advanced
	Received IN token, data transmitted, no ACK (time-out)	01/10	1	0	0	no chg	no chg	Set transmit interrupt	Send data	SIE times-out. Read ptr reversed.
	Received IN token, but RXSETUP = 1 (or TXOE = 0)	01/10	no chg	no chg	1	no chg	no chg	None	NAK, NAKs future trans-actions except SETUP.	Received Setup token (or transmit disabled), so IN tokens are NAKed. (2)
	Received IN token, data transmitted, FIFO error occurs	01/10	1	0	0	no chg	1	Set transmit Inter-rupt	Send data with bit-stuff error. NAKs future trans-actions.	Only underrun FIFO error can occur here. Read ptr reversed.
	Received IN token with existing FIFO error and TXERR set.	01/10	1 (no chg)	0 (no chg)	1	no chg	1 (no chg)	None	NAK	Treated like a "void" condition.
	Received IN token without existing FIFO error but TXERR set, data retrans-mitted, host ACKs	00	0	1	0	no chg	no chg	Set transmit interrupt	Send data	Data is retransmitted. TXACK is set and TXERR is cleared. The TXERR was set by previous transaction when host time-out.

NOTES:
1. These are sticky bits, which must be cleared by firmware. Also, this table assumes TXEPEN and ATM are enabled.
2. Future transactions are NAKed even if the transmit endpoint is stalled when RXSETUP = 1.

Table D-1. Non-isochronous Transmit Data Flow (Continued)

TXFIF (1:0)	Event	New TXFIF (1:0)	TX ERR	TX ACK	TX Void	TX OVF (1)	TX URF (1)	TX Inter-rupt	USB Response	Comments
	Data loaded into FIFO from CPU, CNT written	11	no chg	no chg	no chg	no chg	no chg	None	N/A	Software should always check TXFIF bits before loading and TXOVF after loading.
	Data loaded into FIFO, FIFO error occurs. CNT not written yet.	01/10	no chg	no chg	no chg	1	no chg	None	NAKs future trans-actions	Only overrun FIFO error can occur here. Software should always check TXOVF before write CNT Note: no TXERR, but TXOVF set.
11	Received IN token, data transmitted, host ACKs	10 or 01	0	1	0	no chg	no chg	Set transmit interrupt	Send data	ACK received, so no errors. Read marker advanced.
	Received IN token, data transmitted, no ACK (time-out)	11	1	0	0	no chg	no chg	Set transmit interrupt	Send data	SIE times-out. Read ptr reversed.
	Received IN token, but RXSETUP = 1 (or TXOE = 0)	11	0	0	1	no chg	no chg	None	NAK, NAKs future trans-actions	Received Setup token (or transmit disabled), so IN tokens are NAKed. (2)
	Received IN token, data transmitted, FIFO error occurs	11	1	0	0	no chg	1	Set transmit interrupt	Send data with bit-stuff error, NAK future transactions	Only FIFO underrun error can occur here. Read ptr reversed.

NOTES:
1. These are sticky bits, which must be cleared by firmware. Also, this table assumes TXEPEN and ATM are enabled.
2. Future transactions are NAKed even if the transmit endpoint is stalled when RXSETUP = 1.

Table D-1. Non-isochronous Transmit Data Flow (Continued)

TXFIF (1:0)	Event	New TXFIF (1:0)	TX ERR	TX ACK	TX Void	TX OVF (1)	TX URF (1)	TX Inter-rupt	USB Response	Comments
	Received IN token with existing FIFO error and TXERR set.	11	1 (no chg)	0 (no chg)	1	no chg	1 (no chg)	None	NAK	Treated like a "void" condition.
	Received IN token without existing FIFO error but TXERR set, data retrans-mitted, host ACKs	10 or 01	0	1	0	no chg	no chg	Set transmit interrupt	Send data	Data is retransmitted. TXACK is set and TXERR is cleared. The TXERR was set by previous transaction when host time-out.
	Data loaded into FIFO from CPU, CNT written	11	no chg	no chg	no chg	1	no chg	None	N/A	Writing into CNT when TXFIF = 11 sets TXOVF bit. Software should always check TXFIF bits before loading.

NOTES:
1. These are sticky bits, which must be cleared by firmware. Also, this table assumes TXEPEN and ATM are enabled.
2. Future transactions are NAKed even if the transmit endpoint is stalled when RXSETUP = 1.

Table D-2. Isochronous Transmit Data Flow in Dual-packet Mode

TXFIF (1:0)	Event	New TX FIF (1:0) (2)	(at next SOF)			TX OVF (1,2)	TX URF (1,2)	TX Inter-rupt	USB Response	Comments
			TX ERR	TX ACK	TX Void					
00	Received IN token, but no data or TXOE=0	00	no chg	no chg	1	no chg	no chg	None	Send null data packet	No data was loaded, so send null data packet. This event should never happen.
	Data loaded into FIFO from CPU, CNT written	01	no chg	no chg	no chg	no chg	no chg	None	N/A	Software should always check TXFIF bits before loading and TXOVF after loading.
	Data loaded into FIFO, FIFO error	00	no chg	no chg	no chg	1	no chg	None	N/A	Only overrun FIFO error can occur here. Software should always check TXOVF before write CNT
01/10	Received IN token, data transmitted with or without trans-mission error	00	0	1	0	no chg	no chg	None	Send data	No ACK (time-out) for ISO. Read marker advanced.
	Received IN token, data trans-mitted, FIFO error occurs	00	1	0	0	no chg	1	None	Send CRC with bit-stuff error	Only underrun FIFO error can occur here. Read marker advanced.

NOTES:

1. These are sticky bits, which must be cleared by firmware.
2. TXFIF, TXOVF and TXURF are handled with the following golden rule: Firmware events cause status change immediately while USB events only cause status change at SOF.
   TXOVF: Since overrun can only be caused by firmware, TXOVF is updated immediately.
   TXURF: Since underrun can only be caused by USB, TXURF is updated at SOF.
   TXFIF: TXFIF is “incremented” by firmware and “decremented” by USB. Therefore, writes to TXCNT will “increment” TXFIF immediately. However, a successful USB transaction anytime in a frame will only “decrement” TXFIF at SOF.
   TXERR, TXACK, and TXVOID can only be caused by USB; thus they are updated at the end of every valid transaction.
3. Note: This table assumes TXEPEN and ATM are enabled.

Table D-2. Isochronous Transmit Data Flow in Dual-packet Mode (Continued)

TXFIF (1:0)	Event	New TX FIF (1:0) (2)	(at next SOF)			TX OVF (1,2)	TX URF (1,2)	TX Inter-rupt	USB Response	Comments
			TX ERR	TX ACK	TX Void					
	Received IN token with existing FIFO error	01/10	1 (no chg)	0 (no chg)	1	no chg	1 (no chg)	None	Send null data packet	Treated like a "void" condition.
	Received IN token, but TXOE = 0	01/10	0	0	1	no chg	no chg	None	Send null data packet	Endpoint not enabled for transmit, but no NAK for ISO.
	Data loaded into FIFO from CPU, CNT written	11	no chg	no chg	no chg	no chg	no chg	None	N/A	Software should always check TXFIF bits before loading and TXOVF after loading.
	Data loaded into FIFO, FIFO error occurs	01/10	no chg	no chg	no chg	1	no chg	None	N/A	Only overrun FIFO error can occur here. Software should always check TXOVF before write CNT Note: no TXERR, but TXOVF set.
11	Received IN token, data transmitted with or without trans-mission error	10 or 01	0	1	0	no chg	no chg	None	Send data	No ACK (time-out) for ISO. Read marker advanced.

NOTES:

1. These are sticky bits, which must be cleared by firmware.
2. TXFIF, TXOVF and TXURF are handled with the following golden rule: Firmware events cause status change immediately while USB events only cause status change at SOF.
   TXOVF: Since overrun can only be caused by firmware, TXOVF is updated immediately.
   TXURF: Since underrun can only be caused by USB, TXURF is updated at SOF.
   TXFIF: TXFIF is "incremented" by firmware and "decremented" by USB. Therefore, writes to TXCNT will "increment" TXFIF immediately. However, a successful USB transaction anytime in a frame will only "decrement" TXFIF at SOF.
   TXERR, TXACK, and TXVOID can only be caused by USB; thus they are updated at the end of every valid transaction.
3. Note: This table assumes TXEPEN and ATM are enabled.

Table D-2. Isochronous Transmit Data Flow in Dual-packet Mode (Continued)

TXFIF (1:0)	Event	New TX FIF (1:0) (2)	(at next SOF)			TX OVF (1,2)	TX URF (1,2)	TX Inter-rupt	USB Response	Comments
			TX ERR	TX ACK	TX Void					
	Received IN token, data trans-mitted, FIFO error occurs	10 or 01	1	0	0	no chg	1	None	Send data with bit-stuff error	Only a FIFO underrun error can occur here. Read marker advanced.
	Received IN token with existing FIFO error	11	1 (no chg)	0 (no chg)	1	no chg	1 (no chg)	None	Send null data packet	Treated like a “void” condition.
	Received IN token, but TXOE = 0	11	0	0	1	no chg	no chg	None	Send null data packet	Endpoint not enabled for transmit, but no NAK for ISO.
	Receive SOF indication	10 or 01	no chg	no chg	no chg	no chg	no chg	None (SOF interrupt set) ASOF set.	None	Host never read last frame’s ISO. packet. Read marker and ptr advanced, oldest packet is flushed from FIFO.
	Data loaded into FIFO from CPU, CNT written	11	no chg	no chg	no chg	1	no chg	None	N/A	CNT written when TXFIF=11 will set TXOVF bit. Software should always check TXFIF bits before loading.

NOTES:

1. These are sticky bits, which must be cleared by firmware.
2. TXFIF, TXOVF and TXURF are handled with the following golden rule: Firmware events cause status change immediately while USB events only cause status change at SOF.
   TXOVF: Since overrun can only be caused by firmware, TXOVF is updated immediately.
   TXURF: Since underrun can only be caused by USB, TXURF is updated at SOF.
   TXFIF: TXFIF is “incremented” by firmware and “decremented” by USB. Therefore, writes to TXCNT will “increment” TXFIF immediately. However, a successful USB transaction anytime in a frame will only “decrement” TXFIF at SOF.
   TXERR, TXACK, and TXVOID can only be caused by USB; thus they are updated at the end of every valid transaction.
3. Note: This table assumes TXEPEN and ATM are enabled.

Table D-3. Non-isochronous Receive Data Flow in Single-packet Mode (RXSPM = 1)

FIF (1:0)	Event	New FIF (1:0)	RX ERR	RX ACK	RX Void	RX Setup	RX OVF (1)	RX URF (1)	RX Inter-rupt	USB Response	Comments
00	Received OUT token, but RXIE = 0	00	no chg	no chg	1	no chg	no chg	no chg	None	NAK	FIFO not ready.
	Received OUT token, but timed-out waiting for data	00	no chg	no chg	no chg	no chg	no chg	no chg	None	None	FIFO not loaded. Write ptr reversed.
	Received OUT token, no errors	01	0	1	0	0	no chg	no chg	Set receive interrupt	ACK	Received, no errors, advance write marker.
	Received OUT token, data CRC or bit-stuff error	00	1	0	0	0	no chg	no chg	Set receive interrupt	Time-out	Write ptr reversed. (Possible to have RXERR cleared by hardware before seen by software.)
	Received OUT token, FIFO error occurs	00	1	0	0	0	1	no chg	Set receive interrupt	Time-out, NAK future transac-tions	Only RXOVF FIFO error can occur, requires firmware inter-vention.
	Received OUT token with FIFO error already existing	00	1 (no chg)	0 (no chg)	1	0	1 (no chg)	no chg	None	NAK	Considered to be a "void" condition. Will NAK until software clears condition.
	Received OUT token, but data sequence mismatch	00	no chg	no chg	1	no chg	no chg	no chg	None	ACK	Last ACK corrupted, so send again but ignore the data.
	Received SETUP token, no errors	01	0	1	0	1	0	0	Set receive interrupt	ACK	RXIE or RXSTL has no effect. (2) RXSETUP will be set (control endpoints only).

NOTE:
1. These are sticky bits, which must be cleared by firmware. Also, this table assumes RXEPEN and ARM are enabled.
2. STOVW is set after a valid SETUP token is received and cleared during handshake phase. EDOVW is set during handshake phase.

Table D-3. Non-isochronous Receive Data Flow in Single-packet Mode (RXSPM = 1) (Continued)

FIF (1:0)	Event	New FIF (1:0)	RX ERR	RX ACK	RX Void	RX Setup	RX OVF (1)	RX URF (1)	RX Inter-rupt	USB Response	Comments
	Received SETUP token, but timed-out waiting for data	00	1	0	0	0	0	0	Set receive interrupt	Time-out	FIFO is reset automatically and FIFO data is invalid. (2)
	Received SETUP token, data CRC or bit-stuff error	00	1	0	0	1	0	0	Set receive interrupt	Time-out	Write ptr reversed, (2)
	Received SETUP token, FIFO error occurs	00	1	0	0	1	1	0	Set receive interrupt	Time-out, NAK future transac-tions	(2)
	Received SETUP token with FIFO error already existing	01	0	1	0	1	0	0	Set receive interrupt	ACK	Causes FIFO to reset automatically, forcing new SETUP to be received.RXIE or RXSTL has no effect. (2) RXSETUP will be set (control endpoints only).
	CPU reads FIFO, causes FIFO error	00	no chg	no chg	no chg	no chg	no chg	1	None	NAK future transac-tions, except SETUP	FIFO was empty when read. Should always check RXFIF bits before reading.
01	Received OUT token	01	no chg	no chg	1	no chg	no chg	no chg	None	NAK	FIFO not ready, so data is ignored (CRC or FIFO error not possible)

NOTE:
1. These are sticky bits, which must be cleared by firmware. Also, this table assumes RXEPEN and ARM are enabled.
2. STOVW is set after a valid SETUP token is received and cleared during handshake phase. EDOVW is set during handshake phase.

Table D-3. Non-isochronous Receive Data Flow in Single-packet Mode (RXSPM = 1) (Continued)

FIF (1:0)	Event	New FIF (1:0)	RX ERR	RX ACK	RX Void	RX Setup	RX OVF (1)	RX URF (1)	RX Inter-rupt	USB Response	Comments
	Received SETUP token, no errors	01	0	1	0	1	0	0	Set receive interrupt	ACK	Causes FIFO to reset automatically, forcing new SETUP to be received. RXIE or RXSTL has no effect. (2) RXSETUP will be set (control endpoints only).
	Received SETUP token, but timed-out waiting for data	01	1	0	0	0	0	0	Set receive interrupt	Time-out	FIFO is reset automatically and FIFO data is invalid. (2)
	Received SETUP token, data CRC or bit-stuff error	00	1	0	0	1	0	0	Set receive interrupt	Time-out	Write ptr reversed. RXIE or RXSTL has no effect. (2) RXSETUP will be set (control endpoints only).
	Received SETUP token, FIFO error occurs	00	1	0	0	1	1	0	Set receive interrupt	Time-out, NAK future transac-tions	(2) (control endpoints only).
	Received SETUP token with FIFO error already existing	01	0	1	0	1	0	0	Set receive interrupt	ACK	Causes FIFO to reset automatically, forcing new SETUP to be received. RXIE or RXSTL has no effect. (2) RXSETUP will be set (control endpoints only).
	CPU reads FIFO, sets RXFFRC	00	no chg	no chg	no chg	no chg	no chg	no chg	None	None	

NOTE:

1. These are sticky bits, which must be cleared by firmware. Also, this table assumes RXEPEN and ARM are enabled.
2. STOVW is set after a valid SETUP token is received and cleared during handshake phase. EDOVW is set during handshake phase.

Table D-3. Non-isochronous Receive Data Flow in Single-packet Mode (RXSPM = 1) (Continued)

FIF (1:0)	Event	New FIF (1:0)	RX ERR	RX ACK	RX Void	RX Setup	RX OVF (1)	RX URF (1)	RX Inter-rupt	USB Response	Comments
	CPU reads FIFO, causes FIFO error. RXFFRC not set yet.	01	no chg	no chg	no chg	no chg	no chg	1	None	Time-out, NAK future transac-tions	Software should check RXURF bit before writing RXFFRC.
	CPU reads FIFO, causes FIFO error. Set RXFFRC.	00	no chg	no chg	no chg	no chg	no chg	1	None	Time-out, NAK future transac-tions	Software should check RXURF bit before writing RXFFRC.

NOTE:
1. These are sticky bits, which must be cleared by firmware. Also, this table assumes RXEPEN and ARM are enabled.
2. STOVW is set after a valid SETUP token is received and cleared during handshake phase. EDOVW is set during handshake phase.

Table D-4. Non-isochronous Receive Data Flow in Dual-packet Mode (RXSPM = 0)

FIF (1:0)	Event	New FIF (1:0)	RX ERR	RX ACK	RX Void	RX Setup	RX OVF (1)	RX URF (1)	RX Inter-rupt	USB Response	Comments
00	Received OUT token, but RXIE = 0	00	no chg	no chg	1	no chg	no chg	no chg	None	NAK	FIFO not ready.
	Received OUT token, but timed-out waiting for data	00	no chg	no chg	1	no chg	no chg	no chg	None	None	FIFO not loaded. Write ptr reversed.
	Received OUT token, no errors	01	0	1	0	0	no chg	no chg	Set receive interrupt	ACK	Received, no errors, advance write marker.

NOTES:
1. These are sticky bits, which must be cleared by firmware. Also, this table assumes RXEPEN and ARM are enabled.
2. STOVW is set after a valid SETUP token is received and cleared during handshake phase. EDOVW is set during handshake phase.
3. Note: Dual-packet mode is NOT recommended for Control endpoints.

Table D-4. Non-isochronous Receive Data Flow in Dual-packet Mode (RXSPM = 0) (Continued)

FIF (1:0)	Event	New FIF (1:0)	RX ERR	RX ACK	RX Void	RX Setup	RX OVF (1)	RX URF (1)	RX Inter-rupt	USB Response	Comments
	Received OUT token, data CRC or bit-stuff error	00	1	0	0	0	no chg	no chg	Set receive interrupt	Time-out	Write ptr reversed. (Possible to have RXERR cleared by hardware before seen by software.)
	Received OUT token, FIFO error occurs	00	1	0	0	0	1	no chg	Set receive interrupt	Time-out, NAK future transac-tions	Only RXOVF FIFO error can occur, requires firmware inter-vention.
	Received OUT token with FIFO error already existing	00	1 (no chg)	0 (no chg)	1	0	1 (no chg)	no chg	None	NAK	Considered to be a "void" condition. Will NAK until software clears condition.
	Received OUT token, but data sequence mismatch	00	no chg	no chg	no chg	no chg	no chg	no chg	None	ACK	Last ACK corrupted, so send again but ignore the data.
	Received SETUP token, no errors (dual packet mode not recom-mended!)	01	0	1	0	1	0	0	Set receive interrupt	ACK	Causes FIFO to reset automati-cally, forcing new SETUP to be received. RXIE or RXSTL has no effect. (2) RXSETUP will be set (control endpoints only).
	Received SETUP token, but timed-out waiting for data	00	1	0	0	0	0	0	Set receive interrupt	Time-out	FIFO is reset automatically and FIFO data is invalid. (2)

NOTES:
1. These are sticky bits, which must be cleared by firmware. Also, this table assumes RXEPEN and ARM are enabled.
2. STOVW is set after a valid SETUP token is received and cleared during handshake phase. EDOVW is set during handshake phase.
3. Note: Dual-packet mode is NOT recommended for Control endpoints.

Table D-4. Non-isochronous Receive Data Flow in Dual-packet Mode (RXSPM = 0) (Continued)

FIF (1:0)	Event	New FIF (1:0)	RX ERR	RX ACK	RX Void	RX Setup	RX OVF (1)	RX URF (1)	RX Inter-rupt	USB Response	Comments
	Received SETUP token, data CRC or bit-stuff error (dual packet mode not recom-mended)	00	1	0	0	1	0	0	Set receive interrupt	Time-out	Write ptr reversed, RXIE or RXSTL has no effect. (2) RXSETUP will be set (control endpoints only).
	Received SETUP token, FIFO error occurs	00	1	0	0	1	1	0	Set receive interrupt	Time-out, NAK future transac-tions	RXIE or RXSTL has no effect. (2) RXSETUP will be set (control endpoints only).
	Received SETUP token with FIFO error already existing	01	0	1	0	1	0	0	Set receive interrupt	ACK	Causes FIFO to reset automati-cally, forcing new SETUP to be received. RXIE or RXSTL has no effect. (2) RXSETUP will be set (control endpoints only).
	CPU reads FIFO, causes FIFO error	00	no chg	no chg	no chg	no chg	no chg	1	None	NAK future transac-tions	FIFO was empty when read. Should always check RXFIF bits before reading.
01/10	Received OUT token, but RXIE = 0	01/10	no chg	no chg	1	no chg	no chg	no chg	None	NAK	FIFO not ready.
	Received OUT token, but timed-out waiting for data	01/10	no chg	no chg	1	no chg	no chg	no chg	None	None	FIFO not loaded. Write ptr reversed.
	Received OUT token, no errors	11	0	1	0	0	no chg	no chg	Set receive interrupt	ACK	Received, no errors, advance write marker.

NOTES:
1. These are sticky bits, which must be cleared by firmware. Also, this table assumes RXEPEN and ARM are enabled.
2. STOVW is set after a valid SETUP token is received and cleared during handshake phase. EDOVW is set during handshake phase.
3. Note: Dual-packet mode is NOT recommended for Control endpoints.

Table D-4. Non-isochronous Receive Data Flow in Dual-packet Mode (RXSPM = 0) (Continued)

FIF (1:0)	Event	New FIF (1:0)	RX ERR	RX ACK	RX Void	RX Setup	RX OVF (1)	RX URF (1)	RX Inter-rupt	USB Response	Comments
	Received OUT token, data CRC or bit-stuff error	01/10	1	0	0	0	no chg	no chg	Set receive interrupt	Time-out	Write ptr reversed. (Possible to have RXERR cleared by hardware before seen by software.)
	Received OUT token, FIFO error occurs	01/10	1	0	0	0	1	no chg	Set receive interrupt	Time-out, NAK future transac-tions	Only RXOVF FIFO error can occur, requires firmware inter-vention.
	Received OUT token with FIFO error already existing	01/10	1 (no chg)	0 (no chg)	1	0	1 (no chg)	no chg	None	NAK	Considered to be a "void" condition. Will NAK until software clears condition.
	Received OUT token, but data sequence mismatch	01/10	no chg	no chg	no chg	no chg	no chg	no chg	None	ACK	Last ACK corrupted, so send again but ignore the data.
	Received SETUP token, no errors (dual-packet mode not recom-mended)	01/10	0	1	0	1	0	0	Set receive interrupt	ACK	Causes FIFO to reset automati-cally, forcing new SETUP to be received. RXIE or RXSTL has no effect. (2) RXSETUP will be set (control endpoints only).
	Received SETUP token, but timed-out waiting for data	01/10	1	0	0	0	0	0	Set receive interrupt	Time-out	FIFO is reset automatically, forcing new SETUP to be received. (2)

NOTES:
1. These are sticky bits, which must be cleared by firmware. Also, this table assumes RXEPEN and ARM are enabled.
2. STOVW is set after a valid SETUP token is received and cleared during handshake phase. EDOVW is set during handshake phase.
3. Note: Dual-packet mode is NOT recommended for Control endpoints.

Table D-4. Non-isochronous Receive Data Flow in Dual-packet Mode (RXSPM = 0) (Continued)

FIF (1:0)	Event	New FIF (1:0)	RX ERR	RX ACK	RX Void	RX Setup	RX OVF (1)	RX URF (1)	RX Inter-rupt	USB Response	Comments
	Received SETUP token, data CRC or bit-stuff error (dual-packet mode not recom-mended)	00	1	0	0	1	0	0	Set receive interrupt	Time-out	Write ptr reversed. RXIE or RXSTL has no effect. (2)
	Received SETUP token, FIFO error occurs	00	1	0	0	1	1	0	Set receive interrupt	Time-out, NAK future transac-tions	RXIE or RXSTL has no effect, (2) RXSETUP will be set (control endpoints only).
	Received SETUP token with FIFO error already existing	01/10	0	1	0	1	0	0	Set receive interrupt	ACK	Causes FIFO to reset automati-cally, forcing new SETUP to be received. (2) RXSETUP will be set (control endpoints only).
	CPU reads FIFO, sets RXFFRC	00	no chg	no chg	no chg	no chg	no chg	no chg	None	None	
	CPU reads FIFO, causes FIFO error. RXFFRC not set yet.	01/10	no chg	no chg	no chg	no chg	no chg	1	None	Time-out, NAK future transac-tions	Software should check RXURF bit before writing RXFFRC.
	CPU reads FIFO, causes FIFO error. Set RXFFRC.	00	no chg	no chg	no chg	no chg	no chg	1	None	Time-out, NAK future transac-tions	Software should check RXURF bit before writing RXFFRC.
11	Received OUT token	11	no chg	no chg	1	no chg	no chg	no chg	None	NAK	FIFO not ready, so data is ignored (CRC or FIFO error not possible).

NOTES:
1. These are sticky bits, which must be cleared by firmware. Also, this table assumes RXEPEN and ARM are enabled.
2. STOVW is set after a valid SETUP token is received and cleared during handshake phase. EDOVW is set during handshake phase.
3. Note: Dual-packet mode is NOT recommended for Control endpoints.

Table D-4. Non-isochronous Receive Data Flow in Dual-packet Mode (RXSPM = 0) (Continued)

FIF (1:0)	Event	New FIF (1:0)	RX ERR	RX ACK	RX Void	RX Setup	RX OVF (1)	RX URF (1)	RX Inter-rupt	USB Response	Comments
	Received SETUP token, no errors (dual-packet mode not recom-mended!)	01	0	1	0	1	0	0	Set receive interrupt	ACK	Causes FIFO to reset automati-cally, forcing new SETUP to be received. (2) RXSETUP will be set. (control endpoints only).
	Received SETUP token, but timed-out waiting for data	11	1	0	0	0	0	0	Set receive interrupt	Time-out	FIFO is reset automatically and FIFO data is invalid. (2)
	Received SETUP token, data CRC or bit-stuff error (dual-packet mode not recom-mended).	00	1	0	0	1	0	0	Set receive interrupt	Time-out	Write ptr reversed. RXIE or RXSTL has no effect. (2)
	Received SETUP token, FIFO error (dual-packet mode not recom-mended).	00	1	0	0	1	1	0	Set receive interrupt	Time-out, NAK future transac-tions	RXIE or RXSTL has no effect. (2) RXSETUP will be set (control endpoints only).
	Received SETUP token with FIFO error already existing	01	0	1	0	1	0	0	Set receive interrupt	ACK	Causes FIFO to reset automati-cally, forcing new SETUP to be received. (2) RXSETUP will be set (control endpoints only).
	CPU reads FIFO, sets RXFFRC	10/01	no chg	no chg	no chg	no chg	no chg	no chg	None	None	

NOTES:
1. These are sticky bits, which must be cleared by firmware. Also, this table assumes RXEPEN and ARM are enabled.
2. STOVW is set after a valid SETUP token is received and cleared during handshake phase. EDOVW is set during handshake phase.
3. Note: Dual-packet mode is NOT recommended for Control endpoints.

Table D-4. Non-isochronous Receive Data Flow in Dual-packet Mode (RXSPM = 0) (Continued)

FIF (1:0)	Event	New FIF (1:0)	RX ERR	RX ACK	RX Void	RX Setup	RX OVF (1)	RX URF (1)	RX Inter-rupt	USB Response	Comments
	CPU reads FIFO, causes FIFO error. RXFFRC not written yet.	11	no chg	no chg	no chg	no chg	no chg	1	None	NAKs future transac-tions	Software should check RXURF bit before writing FFRC
	CPU reads FIFO, causes FIFO error. Set RXFFRC.	10/01	no chg	no chg	no chg	no chg	no chg	1	None	NAKs future transac-tions	Software should check RXURF bit before writing FFRC

NOTES:
1. These are sticky bits, which must be cleared by firmware. Also, this table assumes RXEPEN and ARM are enabled.
2. STOVW is set after a valid SETUP token is received and cleared during handshake phase. EDOVW is set during handshake phase.
3. Note: Dual-packet mode is NOT recommended for Control endpoints.

Table D-5. Isochronous Receive Data Flow in Dual-packet Mode (RXSPM = 0)

FIF (1:0)	Event	New RXFIF (1:0) (2)	(at next SOF)			RX OVF (1,2)	RX URF (1,2)	RX Inter-rupt	USB Response	Comments
			RX ERR	RX ACK	RX Void					
00	Received OUT token, but RXIE = 0	00	no chg	no chg	1	no chg	no chg	None	None/ Time-out	FIFO not ready, or timed-out waiting for data packet, but no NAK sent
	Received OUT token, but timed-out waiting for data	00	no chg	no chg	no chg	no chg	no chg	None	None/ Time-out	FIFO not loaded.
	Received OUT token, no errors	01	0	1	0	no chg	no chg	None	None/ Time-out	Received, no errors, advance write marker
	Received OUT token, data CRC or bit-stuff error	01	1	0	0	no chg	no chg	None	None/ Time-out	Bad data still loaded into FIFO.
	Received OUT token, FIFO error occurs	01	1	0	0	1	no chg	None	None/ Time-out	Only RXOVF FIFO error can occur, requires firmware inter-vention.
	Received OUT token with FIFO error already existing	00	1 (no chg)	0 (no chg)	1	1 (no chg)	no chg	None	None/ Time-out	Treated like a "void" condition.
	CPU reads FIFO, causes FIFO error	00	no chg	no chg	no chg	no chg	1	None	None/ Time-out	FIFO was empty when read. Should always check RXFIF bits before reading.

NOTES:

1. These are sticky bits, which must be cleared by firmware. Also, this table assumes RXEPEN and ARM are enabled.
2. RXFIF, RXOVF and RXURF are handled with the following golden rule: Firmware events cause status change immediately while USB events only cause status change at SOF.
   RXURF: Since underrun can only be caused by firmware, RXURF is updated immediately.
   RXOVF: Since overrun can only be caused by USB, RXOVF is updated at SOF.
   RXFIF: RXFIF is "incremented" by USB and "decremented" by firmware. Therefore, setting RXFFRC will "decrement" RXFIF immediately. However, a successful USB transaction anytime in a frame will only "increment" RXFIF at SOF.
   RXERR, RXACK, and RXVOID can only be caused by USB, thus they are updated at the end of transaction.

Table D-5. Isochronous Receive Data Flow in Dual-packet Mode (RXSPM = 0) (Continued)

FIF (1:0)	Event	New RXFIF (1:0) (2)	(at next SOF)			RX OVF (1,2)	RX URF (1,2)	RX Inter-rupt	USB Response	Comments
			RX ERR	RX ACK	RX Void					
	Receive SOF indication	no chg/up dated	up-dated	up-dated	up-dated	up-dated	no chg	None (SOF interrupt)	None/ Time-out	Flags are updated at SOF. Software must check for RXFIF = 00 condition to detect no ISO packet received this frame.
01/10	Received OUT token, but RXIE = 0	01/10	no chg	no chg	1	no chg	no chg	None	None/ Time-out	FIFO not ready.
	Received OUT token, but timed-out waiting for data	01/10	no chg	no chg	no chg	no chg	no chg	None	None/ Time-out	FIFO not loaded.
	Received OUT token, no errors	11	0	1	0	no chg	no chg	None	None/ Time-out	Received, no errors, advance write marker.
	Received OUT token, data CRC or bit-stuff error	11	1	0	0	no chg	no chg	None	None/ Time-out	Possible to have RXERR cleared by hardware before seen by software. Reverse write pointer.
	Received OUT token, FIFO error occurs	11	1	0	0	1	no chg	None	None/ Time-out	Only OVF FIFO error can occur, requires firmware inter-vention.
	Received OUT token with FIFO error already existing	01/10	no chg	no chg	1	no chg	no chg	None	None/ Time-out	Treated like a “void” condition.

NOTES:

1. These are sticky bits, which must be cleared by firmware. Also, this table assumes RXEPEN and ARM are enabled.
2. RXFIF, RXOVF and RXURF are handled with the following golden rule: Firmware events cause status change immediately while USB events only cause status change at SOF.
   RXURF: Since underrun can only be caused by firmware, RXURF is updated immediately.
   RXOVF: Since overrun can only be caused by USB, RXOVF is updated at SOF.
   RXFIF: RXFIF is “incremented” by USB and “decremented” by firmware. Therefore, setting RXFFRC will “decrement” RXFIF immediately. However, a successful USB transaction anytime in a frame will only “increment” RXFIF at SOF.
   RXERR, RXACK, and RXVOID can only be caused by USB, thus they are updated at the end of transaction.

Table D-5. Isochronous Receive Data Flow in Dual-packet Mode (RXSPM = 0) (Continued)

FIF (1:0)	Event	New RXFIF (1:0) (2)	(at next SOF)			RX OVF (1,2)	RX URF (1,2)	RX Inter-rupt	USB Response	Comments
			RX ERR	RX ACK	RX Void					
	CPU reads FIFO, sets RXFFRC	00	no chg	no chg	no chg	no chg	no chg	None	None/ Time-out	
	CPU reads FIFO, causes FIFO error	00	no chg	no chg	no chg	no chg	1	None	None/ Time-out	Software should check RXURF bit before writing RXFFRC.
11	Received OUT token	11	no chg	no chg	1	no chg	no chg	None	None/ Time-out	FIFO not ready, but data must be taken. This situation should never happen.
	Received SOF indication	no chg/ up-dated	up-dated	up-dated	up-dated	up-dated	no chg	None (SOF interrupt)	None/ Time-out	Error condition (not handled by hardware). Software should not allow this condition.
	CPU reads FIFO, sets RXFFRC	10 or 01	no chg	no chg	no chg	no chg	no chg	None	None/ Time-out	
	CPU reads FIFO, causes FIFO error. RXFFRC not set yet.	11	no chg	no chg	no chg	no chg	1	None	None/ Time-out	Software should check RXURF bit before writing RXFFRC.
	CPU reads FIFO, causes FIFO error. Set RXFFRC.	10 or 01	no chg	no chg	no chg	no chg	1	None	None/ Time-out	Software should check RXURF bit before writing RXFFRC.

NOTES:

1. These are sticky bits, which must be cleared by firmware. Also, this table assumes RXEPEN and ARM are enabled.
2. RXFIF, RXOVF and RXURF are handled with the following golden rule: Firmware events cause status change immediately while USB events only cause status change at SOF.
   RXURF: Since underrun can only be caused by firmware, RXURF is updated immediately.
   RXOVF: Since overrun can only be caused by USB, RXOVF is updated at SOF.
   RXFIF: RXFIF is "incremented" by USB and "decremented" by firmware. Therefore, setting RXFFRC will "decrement" RXFIF immediately. However, a successful USB transaction anytime in a frame will only "increment" RXFIF at SOF.
   RXERR, RXACK, and RXVOID can only be caused by USB, thus they are updated at the end of transaction.

Glossary

GLOSSARY

This glossary defines acronyms, abbreviations, and terms that have special meaning in this manual. (Chapter 1, “Guide to this Manual,” discusses notational conventions and general terminology.)

#0data16 A 32-bit constant that is immediately addressed in an instruction. The upper word is filled with zeros.

#1data16 A 32-bit constant that is immediately addressed in an instruction. The upper word is filled with ones.

#data An 8-bit constant that is immediately addressed in an instruction.

#data16 A 16-bit constant that is immediately addressed in an instruction.

#short A constant, equal to 1, 2, or 4, that is immediately addressed in an instruction.

ACK Acknowledgment. Handshake packet indicating a positive acknowledgment.

accumulator A register or storage location that forms the result of an arithmetic or logical operation.

addr11 An 11-bit destination address. The destination can be anywhere in the same 2 Kbyte block of memory as the first byte of the next instruction.

addr16 A 16-bit destination address. The destination can be anywhere within the same 64 Kbyte region as the first byte of the next instruction.

addr24 A 24-bit destination address. The destination can be anywhere within the 16 Mbyte address space.

ALU Arithmetic-logic unit. The part of the CPU that processes arithmetic and logical operations.

assert The term *assert* refers to the act of making a signal active (enabled). The polarity (high/low) is defined by the signal name. Active-low signals are designated by a pound symbol (#) suffix; active-high signals have no suffix. To *assert* RD# is to drive it low; to *assert* ALE is to drive it high.

big endien form — Method of storing data that places the most significant byte at lower storage addresses.

binary-code compatibility — The ability of an 8X930A*x* to execute, without modification, binary code written for an MCS 51 microcontroller.

binary mode — An operating mode, selected by a configuration bit, that enables an 8X930A*x* to execute, without modification, binary code written for an MCS 51 microcontroller.

bit — A binary digit.

bit (operand) — An addressable bit in the 8X930A*x* architecture.

bit51 — An addressable bit in the MCS 51 architecture.

bit stuffing — Insertion of a '0' bit into a data stream to cause an electrical transition on the data wires allowing a PLL to remain locked.

bulk transfer — Non-periodic, large, "bursty" communication typically used for a transfer that can use any available bandwidth and can also be delayed until bandwidth is available.

bus enumeration — Detecting and identifying USB devices.

byte — Any 8-bit unit of data.

clear — The term *clear* refers to the value of a bit or the act of giving it a value. If a bit is *clear*, its value is "0"; *clearing* a bit gives it a "0" value.

code memory — See *program memory*.

configuration bytes — Bytes, residing in on-chip non-volatile memory, that determine a set of operating parameters for the 8X930A*x*.

dir8 — An 8-bit direct address. This can be a memory address or an SFR address.

dir16 — A 16-bit memory address (00:0000H–00:FFFFH) used in direct addressing.

DPTR — The 16-bit data pointer. In 8X930A*x* microcontrollers, DPTR is the lower 16 bits of the 24-bit extended data pointer, DPX.

DPX The 24-bit extended data pointer in 8X930A*x* microcontrollers. See also *DPTR*.

deassert The term *deassert* refers to the act of making a signal inactive (disabled). The polarity (high/low) is defined by the signal name. Active-low signals are designated by a pound symbol (#) suffix; active-high signals have no suffix. To *deassert* RD# is to drive it high; to *deassert* ALE is to drive it low.

doping The process of introducing a periodic table Group III or Group V element into a Group IV element (e.g., silicon). A Group III impurity (e.g., indium or gallium) results in a *p-type* material. A Group V impurity (e.g., arsenic or antimony) results in an *n-type* material.

double word A 32-bit unit of data. In memory, a double word comprises four contiguous bytes.

dword See *double word*.

edge-triggered The mode in which a device or component recognizes a falling edge (high-to-low transition), a rising edge (low-to-high transition), or a rising or falling edge of an input signal as the assertion of that signal. See also *level-triggered*.

encryption array An array of key bytes used to encrypt user code in the on-chip code memory as that code is read; protects against unauthorized access to user's code.

endpoint A uniquely identifiable portion of a USB device that is the source or sink of information in a communication flow between the host and the device.

EPROM Erasable, programmable read-only memory

external address A 16-bit or 17-bit address presented on the device pins. The address decoded by an external device depends on how many of these address bits the external system uses. See also *internal address*.

FET Field-effect transistor.

FIFO Circular data buffer associated with an endpoint. Each endpoint has a transmit FIFO and a receive FIFO. Transmit FIFOs are written by the 8X930A*x* CPU then read by the FIU for transmission. Receive FIFOs

	are written by the FIU following reception then read by the CPU.
FIU	Function Interface Unit. Manages data received and transmitted by the USB module.
function	A USB device that provides a capability to the host.
idle mode	The power conservation mode that freezes the core clocks but leaves the peripheral clocks running.
input leakage	Current leakage from an input pin to power or ground.
integer	Any member of the set consisting of the positive and negative whole numbers and zero.
internal address	The 24-bit address that the device generates. See also *external address*.
interrupt handler	The module responsible for handling interrupts that are to be serviced by user-written interrupt service routines.
interrupt latency	The delay between an interrupt request and the time when the first instruction in the interrupt service routine begins execution.
interrupt response time	The time delay between an interrupt request and the resulting break in the current instruction stream.
interrupt service routine (ISR)	The software routine that services an interrupt.
isochronous data	A stream of data whose timing is implied by its delivery rate.
isochronous transfer	One of four USB transfer types, isochronous transfers provide periodic, continuous communication between host and device.
level-triggered	The mode in which a device or component recognizes a high level (logic one) or a low level (logic zero) of an input signal as the assertion of that signal. See also *edge-triggered*.
low clock mode	The default mode upon reset, low clock mode ensures that the I_{CC} drawn by the 8X930A*x* is less than one unit load.
LSB	Least-significant bit of a byte or least-significant byte of a word.

maskable interrupt An interrupt that can be disabled (masked) by its individual mask bit in an interrupt enable register. All 8X930A*x* interrupts, except the software trap (TRAP), are maskable.

MSB Most-significant bit of a byte or most-significant byte of a word.

multiplexed bus A bus on which the data is time-multiplexed with (some of) the address bits.

***n*-channel FET** A field-effect transistor with an *n*-type conducting path (channel).

***n*-type material** Semiconductor material with introduced impurities (*doping*) causing it to have an excess of negatively charged carriers.

nonmaskable interrupt An interrupt that cannot be disabled (masked). The software trap (TRAP) is the 8X930A*x*'s only nonmaskable interrupt.

***npn* transistor** A transistor consisting of one part *p*-type material and two parts *n*-type material.

NRZI Non Return to Zero Invert. A method of encoding serial data in which ones and zeroes are represented by opposite and alternating high and low voltages where there is no return to zero (reference) voltage between encoded bits. Eliminates the need for clock pulses.

OTPROM One-time-programmable read-only memory, a version of EPROM.

***p*-channel FET** A field-effect transistor with a *p*-type conducting path.

***p*-type material** Semiconductor material with introduced impurities (*doping*) causing it to have an excess of positively charged carriers.

PC Program counter.

phase-locked loop A circuit that acts as a phase detector to keep an oscillator in phase with an incoming frequency.

PLL See *phase-locked loop*.

program memory A part of memory where instructions can be stored for fetching and execution.

powerdown mode — The power conservation mode that freezes both the core clocks and the peripheral clocks.

PWM — Pulse-width modulated (outputs).

rel — A signed (two's complement) 8-bit, relative destination address. The destination is -128 to +127 bytes relative to the first byte of the next instruction.

reserved bits — Register bits that are not used in this device but may be used in future implementations. Avoid any software dependence on these bits. In the 8X930A*x*, the value read from a reserved bit is indeterminate; do not write a "1" to a reserved bit.

resume — Once a device is in the suspend state, its operation can be resumed by receiving non-idle signaling on the bus. See also *suspend*.

RT — Real-time

SIE — Serial Bus Interface Engine. Handles the communications protocol of the USB.

set — The term *set* refers to the value of a bit or the act of giving it a value. If a bit is *set*, its value is "1"; *setting* a bit gives it a "1" value.

SFR — A special function register that resides in its associated on-chip peripheral or in the 8X930A*x* core.

sign extension — A method for converting data to a larger format by filling the extra bit positions with the value of the sign. This conversion preserves the positive or negative value of signed integers.

sink current — Current flowing **into** a device to ground. Always a positive value.

SOF — Start of Frame. The SOF is the first transaction in each frame. SOF allows endpoints to identify the start of frame and synchronize internal endpoint clocks to the host.

source-code compatibility — The ability of an 8X930A*x* to execute re-compiled source code written for an MCS 51 microcontroller.

source current — Current flowing **out of** a device from V_{CC}. Always a negative value.

source mode An operating mode that is selected by a configuration bit. In source mode, an 8X930A*x* can execute re-compiled source code written for an MCS 51 microcontroller. In source mode, the 8X930A*x* cannot execute unmodified binary code written for an MCS 51 microcontroller. See binary mode.

SP Stack pointer.

SPX Extended stack pointer.

state time (or state) The basic time unit of the device; the combined period of the two internal timing signals, PH1 and PH2. (The internal clock generator produces PH1 and PH2 by halving the frequency of the signal on XTAL1.) With a 16 MHz crystal, one *state time* equals 125 ns. Because the device can operate at many frequencies, this manual defines time requirements in terms of *state times* rather than in specific units of time.

suspend A low current mode used when the USB bus is idle. The 8X930A*x* enters suspend when there is a constant idle state on the bus lines for more than 3.0 msec. When a device is in suspend state, it draws less than 500 µA from the bus. See also *resume*.

UART Universal asynchronous receiver and transmitter. A part of the serial I/O port.

USB Universal Serial Bus. An industry-standard extension to the PC architecture with a focus on Computer Telephony Integration (CTI), consumer, and productivity applications.

WDT Watchdog timer, an internal timer that resets the device if the software fails to operate properly.

word A 16-bit unit of data. In memory, a word comprises two contiguous bytes.

wraparound The result of interpreting an address whose hexadecimal expression uses more bits than the number of available address lines. Wraparound ignores the upper address bits and directs access to the value expressed by the lower bits.

Index

INDEX

#0data16, A-3
#1data16, A-3
#data
    definition, A-3
#data16, A-3
#short, A-3
8X930Ax, 1-1
    block diagram, 2-2

A

A15:8, 9-1
    description, 15-2
A16
    description, 15-2
AC flag, 5-17, 5-18
ACALL instruction, 5-14, A-24, A-26
ACC, 3-12, 3-17, C-2, C-6
Accumulator, 3-14
    in register file, 3-12
AD7:0, 9-1
    description, 15-2
ADD instruction, 5-8, A-14
ADDC instruction, 5-8, A-14
addr11, 5-12, A-3
addr16, 5-12, A-3
addr24, 5-12, A-3
Address spaces, *See Memory space, SFRs, Register file, External memory, Compatibility*
Addresses
    internal vs external, 4-10
Addressing modes, 3-5, 5-4
    See also Data instructions, Bit instructions, Control instructions
AJMP instruction, 5-14, A-24
ALE
    caution, 13-6
    description, 15-2
    extended, 4-11
    following reset, 13-6
    idle mode, 14-5
ANL instruction, 5-9, 5-10
    for bits, A-23
ANL/ instruction, 5-10
    for bits, A-23
Arithmetic instructions, 5-8, 5-9
    table of, A-14, A-15, A-16

B

B register, 3-14, C-6
    as SFR, 3-17, C-2
    in register file, 3-12
Base address, 5-4
Baud rate, *See Serial I/O port, Timer 1, Timer 2*
Big endien form, 5-2
Binary and source modes, 2-4, 4-12–4-13, 5-1
    opcode maps, 4-12
    selection guidelines, 4-12
Bit address
    addressing modes, 5-11
    definition, A-3
    examples, 5-10
Bit instructions, 5-10–5-11
    addressing modes, 5-4, 5-10
bit51, 5-10, A-3
Broadcast address, *See Serial I/O port*
Bulletin board service (BBS), 1-7, 1-9
Bus cycles
    See External bus cycles

C

Call instructions, 5-14
Capacitors
    bypass, 13-2
CCAP1H–CCAP4H, CCAP1L–CCAP4L, 3-20, C-5, C-7
CCAPM1–4, 3-20, 11-15, C-5, C-8
    interrupts, 6-6
CCON, 3-20, 11-14, C-5, C-9
CEX4:0, 9-1
CH, CL, 3-20, C-5, C-9
CJNE instruction, A-25
Clock, 2-7
    external, 2-7, 13-3
    idle and powerdown modes, 14-5
    idle mode, 14-5
    on-chip crystal, 2-7
    on-chip PLL, 2-7
    PLLSEL2:0, 2-8, 13-1

powerdown mode, 14-6, 14-7
sources, 13-2
USB rates (table), 2-8, B-6
CLR instruction, 5-9, 5-10, A-17, A-23
CMOD, 3-20, 11-13, C-5, C-10
interrupts, 6-6
CMP instruction, 5-8, 5-13, A-15
Code constants, 4-14
Code fetches
external, 15-1, 15-6
internal, 15-6
page hit and page miss, 15-6
page mode, 15-6
Code memory
MCS 51 architecture, 3-3
See also On-chip code memory, External code memory
Compatibility (MCS 251 and MCS 51 architectures), 3-2–3-5
address spaces, 3-2, 3-4
external memory, 3-5
instruction set, 5-1
SFR space, 3-5
See also Binary and source modes
CompuServe, 1-7
Configuration
array, 4-1
external, 4-3
on-chip, 4-2
bits, 4-4
external memory, 4-7
overview, 4-1
wait state, 4-11
Configuration bytes
bus cycles, 15-15
UCONFIG0, 4-1
UCONFIG0 (table), 4-5
UCONFIG1, 4-1
UCONFIG1 (table), 4-6
verifying, 16-1
Control instructions, 5-11–5-15
addressing modes, 5-11, 5-13
table of, A-24
Core, 2-6
SFRs, 3-17, C-2
CPL instruction, 5-9, 5-10, A-17, A-23
CPU, 2-6
block diagram, 2-6
Crystal
on-chip oscillator, 13-2
CY flag, 5-17, 5-18

D

DA instruction, A-16
Data instructions, 5-4–5-10
addressing modes, 5-4
Data Pointer, C-2
Data pointer, *See DPH, DPL, DPTR, DPX, DPXL*
Data transfer instructions, 5-9–5-10
table of, A-22
See also Move instructions
Data types, 5-2
Datasheets
on WWW, 1-7
DEC instruction, 5-8, A-15
Destination register, 5-3
dir16, A-3
dir8, A-3
Direct addressing, 5-4
in control instructions, 5-12
Displacement addressing, 5-4, 5-7
DIV instruction, 5-8, A-16
Division, 5-8
DJNZ instruction, A-25
Documents
ordering, 1-7
related, 1-5
DPH, DPL, 3-14, C-11
as SFRs, 3-17, C-2
DPTR, 3-14
in jump instruction, 5-12
DPX, 3-5, 3-12, 3-14, 5-4
DPXL, 3-14, C-12
as SFR, 3-17, C-2
external data memory mapping, 3-5, 5-4, 5-9
reset value, 3-5

E

EA#, 3-8
description, 15-2
ECALL instruction, 5-14, A-24
ECI, 9-1
EJMP instruction, 5-14, A-24
EMAP# bit, 3-9, 4-14
Encryption, 16-1

Encryption array, 16-1
    key bytes, 16-5
EPCON, 7-6, C-12
EPINDEX, 7-5, C-14
ERET instruction, 5-14, A-24
Escape prefix (A5H), 4-12
Extended ALE, A-1, A-11
Extended stack pointer, *See SPX*
External address lines
    number of, 4-8
    See also External bus
External bus
    inactive, 15-3
    pin status, 15-15, 15-16
    structure in page mode, nonpage mode, 15-6
External bus cycles, 15-3–15-16
    definitions, 15-3
    extended ALE wait state, 15-10
    extended RD#/WR#/PSEN# wait state, 15-8
    nonpage mode, 15-3, 15-5
    page mode, 15-6–15-8
    page-hit vs page-miss, 15-6
    Real-time wait states, 15-8
External code memory
    example, 15-20, 15-30
    idle mode, 14-5
    powerdown mode, 14-6
External memory, 3-9
    design examples, 15-17–15-30
    MCS 51 architecture, 3-2, 3-4, 3-5
External memory interface
    configuring, 4-7–4-14
    signals, 15-3
External RAM
    example, 15-26
    exiting idle mode, 14-6

F

F0 flag, 5-17
FADDR, 7-13, C-14
FaxBack service, 1-7, 1-8
FIE, 6-3, 6-7, C-15
FIFLG, 6-3, 6-9, C-16
Flash memory
    example, 15-18, 15-20, 15-30
Frame Timer, 6-9

G

Given address, *See Serial I/O port*
Global resume interrupt, 6-10
Global suspend interrupt, 6-10

H

Hardware
    application notes, 1-6
Help desk, 1-7

I

I/O ports, 9-1–9-7
    external memory access, 9-6, 9-7
    latches, 9-2
    loading, 9-6
    pullups, 9-5
    quasi-bidirectional, 9-5
    SFRs, 3-15
    See also Ports 0–3
Idle mode, 2-6, 14-1, 14-5
    entering, 14-5
    exiting, 13-5, 14-5
    external bus, 15-3
IEN0, 3-17, 6-3, 6-6, 6-11, 6-21, 12-11, 14-7, C-2, C-17
IEN1, 3-17, 6-3, 6-12, 6-21, C-2, C-18
Immediate addressing, 5-4
INC instruction, 5-8, A-15
Indirect addressing, 5-4
    in control instructions, 5-12
    in data instructions, 5-6
Instruction set
    MCS 251 architecture, A-1–A-138
    MCS 51 architecture, 5-1
Instructions
    arithmetic, 5-8
    bit, 5-10
    data, 5-4
    data transfer, 5-9
    logical, 5-9
INT1:0#, 6-1, 9-1, 10-1, 10-2
    pulse width measurements, 10-11
Intel Architecture Labs, 1-8
Interrupt request, 6-1
    cleared by hardware, 6-4, 6-5
Interrupt service routine
    exiting idle mode, 14-5

exiting powerdown mode, 14-7
Interrupts, 6-1–6-22
blocking conditions, 6-21
detection, 6-4
edge-triggered, 6-4, 6-5
enable/disable, 6-11
exiting idle mode, 14-5
exiting powerdown mode, 14-7
external (INT1:0#), 6-1, 6-3, 6-18, 14-7
global enable, 6-11
global resume (GRSM), 14-3, 14-6
global suspend (GSUS), 14-3, 14-6
instruction completion time, 6-17
latency, 6-16–6-20
level-triggered, 6-4, 6-5
PCA, 6-5
polling, 6-16, 6-17
priority, 6-1, 6-3, 6-4, 6-5, 6-13–6-15
priority within level, 6-13
processing, 6-16–6-22
request, *See Interrupt request*
response time, 6-16, 6-17
sampling, 6-4, 6-17
serial port, 6-6
service routine (ISR), 6-4, 6-5, 6-16, 6-21, 6-22
sources, 6-3
timer/counters, 6-5
vector cycle, 6-21
vectors, 3-3, 6-4, 6-5
INTR bit
and RETI instruction, 4-14, 5-15
IPH0, 3-17, 6-3, 6-14, 6-21, C-2, C-19
bit definitions, 6-13
IPH1, 3-17, 6-3, 6-15, 6-21, C-2, C-21
bit definitions, 6-13
IPL0, 3-17, 6-3, 6-14, 6-21, C-2, C-20
bit definitions, 6-13
IPL1, 3-17, 6-3, 6-15, C-2, C-22
bit definitions, 6-13
Isochronous RX dataflow
Dual-packet mode, D-18
Isochronous TX dataflow
Dual-packet mode, D-5
ISR, *See Interrupts, service routine*

J

JB instruction, 5-13, A-24
JBC instruction, 5-13, A-24
JC instruction, A-24
JE instruction, A-24
JG instruction, A-24
JLE instruction, A-24
JMP instruction, A-24
JNB instruction, 5-13, A-24
JNC instruction, A-24
JNE instruction, A-24
JNZ instruction, A-24
JSG instruction, A-25
JSGE instruction, A-25
JSL instruction, A-24
JSLE instruction, A-25
Jump instructions
bit-conditional, 5-13
compare-conditional, 5-13, 5-14
unconditional, 5-14
JZ instruction, A-24

K

Key bytes, *See Encryption array*

L

Latency, 6-16
LCALL instruction, 5-14, A-24
LJMP instruction, 5-14, A-24
Lock bits
protection types, 16-5
verifying, 16-1
Logical instructions, 5-9
table of, A-17
Low clock mode, 14-1, 14-8
entering, 14-8
exiting, 14-9

M

MCS 251 microcontroller
core, 2-6
Memory space, 2-5, 3-1, 3-5–3-9
compatibility, *See Compatibility (MCS 251 and MCS 51 architectures)*
regions, 3-2, 3-5
reserved locations, 3-5

Miller effect, 13-3
MOV instruction, A-19, A-20, A-21
for bits, 5-10, A-23
MOVC instruction, 3-2, 5-9, A-21
Move instructions
table of, A-19
MOVH instruction, 5-9, A-21
MOVS instruction, 5-9, A-21
MOVX instruction, 3-2, 5-9, A-21
MOVZ instruction, 5-9, A-21
MUL instruction, 5-8
Multiplication, 5-8

N

N flag, 5-9, 5-18
Noise reduction, 13-2, 13-3
Non-isochronous RX dataflow
Dual-packet mode, D-11
Single-packet mode, D-8
Non-isochronous TX dataflow, D-1
Nonpage mode
bus cycles, *See External bus cycles, Nonpage mode*
bus structure, 15-3
configuration, 4-7
design example, 15-22, 15-26
port pin status, 15-16
Nonvolatile memory
verifying, 16-1–16-6
NOP instruction, 5-14, A-25

O

On-chip code memory, 15-8
accessing in data memory, 4-14
accessing in region 00:, 3-9
idle mode, 14-5
setup for verifying, 16-3–16-4
starting address, 3-8, 16-1
top eight bytes, 3-8, 4-1, 16-2
verifying, 16-1
On-chip oscillator
hardware setup, 13-1
On-chip RAM, 3-8
bit addressable, 3-8, 5-11
bit addressable in MCS 51 architecture, 5-11
idle mode, 14-5
MCS 51 architecture, 3-2, 3-4
reset, 13-6
ONCE mode, 14-1
entering, 14-9
exiting, 14-9
Opcodes
for binary and source modes, 4-12, 5-1
map, A-4
binary mode, 4-13
source mode, 4-13
See also Binary and source modes
ORL instruction, 5-9, 5-10
for bits, A-23
ORL/ instruction, 5-10
for bits, A-23
Oscillator
at startup, 13-6
ceramic resonator, 13-3
during reset, 13-4
on-chip crystal, 2-7, 13-2
on-chip PLL, 2-7
ONCE mode, 14-9
powerdown mode, 14-6, 14-7
verifying nonvolatile memory, 16-3
OV bit, 5-17, 5-18
Overflow *See OV bit*

P

P bit, 5-17
P0, 3-19, 9-2, C-2, C-22
P1, 3-19, 9-2, C-2, C-23
P2, 3-19, 9-2, C-2, C-23
P3, 3-19, 9-2, C-2, C-24
Page mode, 2-6
address access time, 15-6
bus cycles, *See External bus cycles, page mode*
configuration, 4-7
design example, 15-20, 15-29
port pin status, 15-16
PAGE# bit, 4-7
Parity *See P bit*
PCA
compare/capture modules, 11-1
idle mode, 14-5
pulse width modulation, 11-10
SFRs, 3-20, C-5
timer/counter, 11-1

watchdog timer, 11-1, 11-9
PCON, 3-17, 12-7, 14-2, 14-5, 14-6, C-2, C-25
idle mode, 14-5
powerdown mode, 14-7
reset, 13-5
PCON1, 3-17, 14-3, 14-6, C-2, C-26
Peripheral cycle, 2-7
Phase 1 and phase 2, 2-7
Phone numbers, customer support, 1-7
Pin conditions, 14-4
Pins
unused inputs, 13-2
Pipeline, 2-7
POP instruction, 3-14, 5-10, A-22
Port 0, 9-2
and top of on-chip code memory, 16-2
pullups, 9-7
structure, 9-3
See also External bus
Port 1, 9-2
structure, 9-3
Port 2, 9-2
and top of on-chip code memory, 16-2
structure, 9-4
See also External bus
Port 3, 9-2
structure, 9-3
Ports
at power on, 13-6
exiting idle mode, 14-6
exiting powerdown mode, 14-6
extended execution times, 5-1, A-1, A-11
verifying nonvolatile memory, 16-3, 16-4
Power supply, 13-2
Powerdown mode, 2-6, 14-1, 14-6–14-7
accidental entry, 14-5
entering, 14-7
exiting, 13-5, 14-7
external bus, 15-3
Program status word *See PSW, PSW1*
PSEN#
caution, 13-6
description, 15-2
idle mode, 14-5
regions for asserting, 4-8
PSW, 5-17, A-26
PSW, PSW1, 3-17, 5-15–5-16, C-2, C-27, C-28
conditional jumps, 5-13
effects of instructions on flags, 5-16
PSW1, 5-18, A-26, C-2
Pullups, 9-7
ports 1, 2, 3, 9-5
Pulse width measurements, 10-11
PUSH instruction, 3-14, 5-10, A-22

R

RCAP2H, RCAP2L, 3-19, 10-4, 12-12, C-4, C-29
RD#, 9-1
described, 15-2
regions for asserting, 4-8
RD1:0 configuration bits, 4-8
Read-modify-write instructions, 9-2, 9-4
Real-time wait states, 15-11
Register addressing, 5-4, 5-5
Register banks, 3-2, 3-9
accessing in memory address space, 5-4
implementation, 3-9, 3-12
MCS 51 architecture, 3-2
selection bits (RS1:0), 5-17, 5-18
Register file, 2-7, 3-1, 3-5, 3-9–3-14
address space, 3-2
addressing locations in, 3-12
and reset, 13-6
MCS 51 architecture, 3-4
naming registers, 3-12
register types, 3-12
Registers, *See Register addressing, Register banks, Register file*
rel, A-3
Relative addressing, 5-4, 5-12
Reset, 13-4–13-7
cold start, 13-5, 14-1
entering ONCE mode, 14-9
exiting idle mode, 14-5
exiting powerdown mode, 14-7
externally initiated, 13-5
need for, 13-6
operation, 13-6
power-on reset, 13-1, 13-6
timing sequence, 13-6, 13-7
USB initiated, 13-5
warm start, 13-5, 14-1
WDT initiated, 13-5
RET instruction, 5-14, A-24
RETI instruction, 5-15, 6-1, 6-21, 6-22, A-24

Return instructions, 5-14
RL instruction, A-17
RLC instruction, A-17
Rotate instructions, 5-9
RR instruction, A-17
RRC instruction, A-17
RST, 13-5, 13-6, B-4
    ONCE mode, 14-9
    See Reset
RTWCE (Real-time WAIT CLOCK Enable) Bit, 15-12
RTWE (Real-time WAIT# Enable) Control Bit, 15-12
RXCNTH, 7-28, C-30
RXCNTL, 7-28, C-30
RXCON, 7-29, C-31
RXD, 9-1, 12-1
    mode 0, 12-2
    modes 1, 2, 3, 12-7
RXDAT, 7-27, C-33
RXFLG, 7-31, C-34
RXSTAT, 7-10, C-36

S

SADDR, 3-19, 12-2, 12-8, 12-9, 12-10, C-3, C-38
SADEN, 3-19, 12-2, 12-8, 12-9, 12-10, C-3, C-38
SBUF, 3-19, 12-2, 12-3, C-3, C-38
SCON, 3-19, 12-2, 12-3, 12-4, 12-7, C-3, C-39
    bit definitions, 12-1
    interrupts, 6-6
Security, 16-1
Serial Bus Interface Engine, 7-1
Serial I/O port, 12-1–12-13
    asynchronous modes, 12-7
    automatic address recognition, 12-8–12-10
    baud rate generator, 10-7
    baud rate, mode 0, 12-2, 12-10
    baud rate, modes 1, 2, 3, 12-7, 12-11–12-13
    broadcast address, 12-9
    data frame, modes 1, 2, 3, 12-7
    framing bit error detection, 12-7
    full-duplex, 12-7
    given address, 12-8
    half-duplex, 12-2
    interrupts, 12-1, 12-8
    mode 0, 12-2–12-3
    modes 1, 2, 3, 12-7
    multiprocessor communication, 12-8
    SFRs, 3-19, 12-2, C-3
    synchronous mode, 12-2
    timer 1 baud rate, 12-11, 12-12
    timer 2 baud rate, 12-12–12-13
    timing, mode 0, 12-6
SETB instruction, 5-10, A-23
SFRs
    accessing, 3-15
    address space, 3-1, 3-2
    idle mode, 14-5
    MCS 51 architecture, 3-4
    powerdown mode, 14-6
    reset initialization, 13-6
    reset values, 3-15
    tables of, 3-15
    unimplemented, 3-15
Shift instruction, 5-9
Signature bytes
    values, 16-6
    verifying, 16-1, 16-6
SJMP instruction, 5-14, A-24
SLL instruction, 5-9, A-17
SOF# pin, 6-10
SOFH, 7-12, C-41
SOFL, 7-13, C-42
Software
    application notes, 1-6
Solutions OEM, 1-8
Source register, 5-3
SP, 3-14, 3-17, C-2, C-42
Special function registers *See SFRs*
SPH, 3-14, 3-17, C-2, C-43
SPX, 3-12, 3-14
SRA instruction, 5-9, A-18
SRL instruction, 5-9, A-18
State time, 2-7
SUB instruction, 5-8, A-14
SUBB instruction, 5-8, A-14
SWAP instruction, 5-9, A-18

T

T1:0, 9-1, 10-2
T2, 9-1, 10-2
T2CON, 3-19, 10-1, 10-4, 10-11, 10-18, 12-13, C-4, C-44
    baud rate generator, 12-12

T2EX, 9-1, 10-2, 10-12, 12-12
T2MOD, 3-19, 10-1, 10-4, 10-11, 10-17, C-4, C-45
Target address, 5-4
TCON, 3-19, 10-1, 10-4, 10-6, 10-9, C-4, C-46
    interrupts, 6-1
Tech support, 1-7
TH2, TL2
    baud rate generator, 12-12, 12-13
THx, TLx (x = 0, 1, 2), 3-19, 10-4, C-4, C-48, C-49
Timer 0, 10-4–10-9
    applications, 10-10
    auto-reload, 10-5
    interrupt, 10-4
    mode 0, 10-4
    mode 1, 10-5
    mode 2, 10-5
    mode 3, 10-6
    pulse width measurements, 10-11
Timer 1
    applications, 10-10
    auto-reload, 10-10
    baud rate generator, 10-6
    interrupt, 10-6
    mode 0, 10-7
    mode 1, 10-7
    mode 2, 10-10
    mode 3, 10-10
    pulse width measurements, 10-11
Timer 2, 10-11–10-18
    auto-reload mode, 10-13
    baud rate generator, 10-15
    capture mode, 10-12
    clock out mode, 10-15
    interrupt, 10-12
    mode select, 10-16
Timer/counters, 10-1–10-18
    external input sampling, 10-2
    internal clock, 10-1
    interrupts, 10-1
    overview, 10-1–10-2
    registers, 10-4
    SFRs, 3-19, C-4
    signal descriptions, 10-2
    See also Timer 0, Timer 1, Timer 2
TMOD, 3-19, 10-1, 10-4, 10-6, 10-8, 12-11, C-4, C-47
Tosc, 2-9
TRAP instruction, 5-15, 6-3, 6-11, 6-22, A-25
TXCNTH, 7-19, C-50
TXCNTL, 7-19, C-50
TXCON, 7-20, C-51
TXD, 9-1, 12-1
    mode 0, 12-2
    modes 1, 2, 3, 12-7
TXFLG, 7-22, C-54
TXSTAT, 7-8, C-56

U

UART, 12-1
UCONFIG1:0
    See Configuration bytes
UD flag, 5-17
USB
    configuration descriptor, 8-2
    device descriptor, 8-2
    function
        suspend and resume, 14-1
    function operations
        post-receive, 8-9
        post-transmit, 8-6
        pre-transmit, 8-5
        receive, 8-8
        transmit, 8-3
    function resume interrupt, 6-10
    function routines
        overview, 8-1
        receive, 8-2
        receive SOF, 8-1, 8-14
        setup, 8-1, 8-12
        transmit, 8-2
    global resume, 14-8
    global suspend, 14-6
    idle state, 8-1, 8-2
    Interrupts
        Any SOF, 6-5
        Function, 6-5, 6-6–6-9
        Function resume, 6-10
        Global suspend/resume, 6-5, 6-10
        Start-of-Frame, 6-9–6-10
    module, 2-3, 2-10
        block diagram, 2-3
    power control, 14-6
    powerdown, 14-6
    programming models, 8-1
    remote wake-up, 14-8

Transaction dataflow model, 7-1, D-1
unenumerated state, 8-1, 8-2
USB FIFO Information
Receive, 7-24
RXFLG, 7-31, C-34
scooping, 7-24
write marker, 7-24, 8-8
write pointer, 7-24, 8-8
Transmit
Capacities, 7-4
Data Set Management, 7-17
Data/Byte Count Registers, 7-15
read marker, 7-14
read pointer, 7-14, 8-3
Transmit FIFO, 7-14
TXCNTL/TXCNTH, 7-15
write pointer, 8-3

V

Vcc, 13-2
during reset, 13-4
power off flag, 14-1
power-on reset, 13-6
powerdown mode, 14-7
Verifying nonvolatile memory, 16-1
Vss, 13-2

W

Wait state, 5-1, A-1, A-11
configuration bits, 4-11
extended ALE, 4-11
RD#/WR#/PSEN#, 4-11
WAIT# (Wait State) Input, 15-2
Watchdog timer (hardware), 10-1, 10-17, 10-19
enabling, disabling, 10-17
in idle mode, 10-19
in powerdown mode, 10-19
initiated reset, 13-5
overflow, 10-17
SFR (WDTRST), 3-19, 10-4, C-4
Watchdog Timer (PCA), 11-1, 11-9
WCLK (Wait Clock) Output, 15-2
WCON (Real-time wait state control), 15-11
WDTRST, 3-19, 10-4, 10-17, C-4, C-57
World Wide Web, 1-7
WR#, 9-1
described, 15-2

X

XALE# bit, 4-11
XCH instruction, 5-9, A-22
XCHD instruction, 5-9, A-22
XRL instruction, 5-9
XTAL1, XTAL2, 13-2
capacitance loading, 13-3

Z

Z flag, 5-9, 5-18