MX4200 cable (Magnavox 538534–3 version)

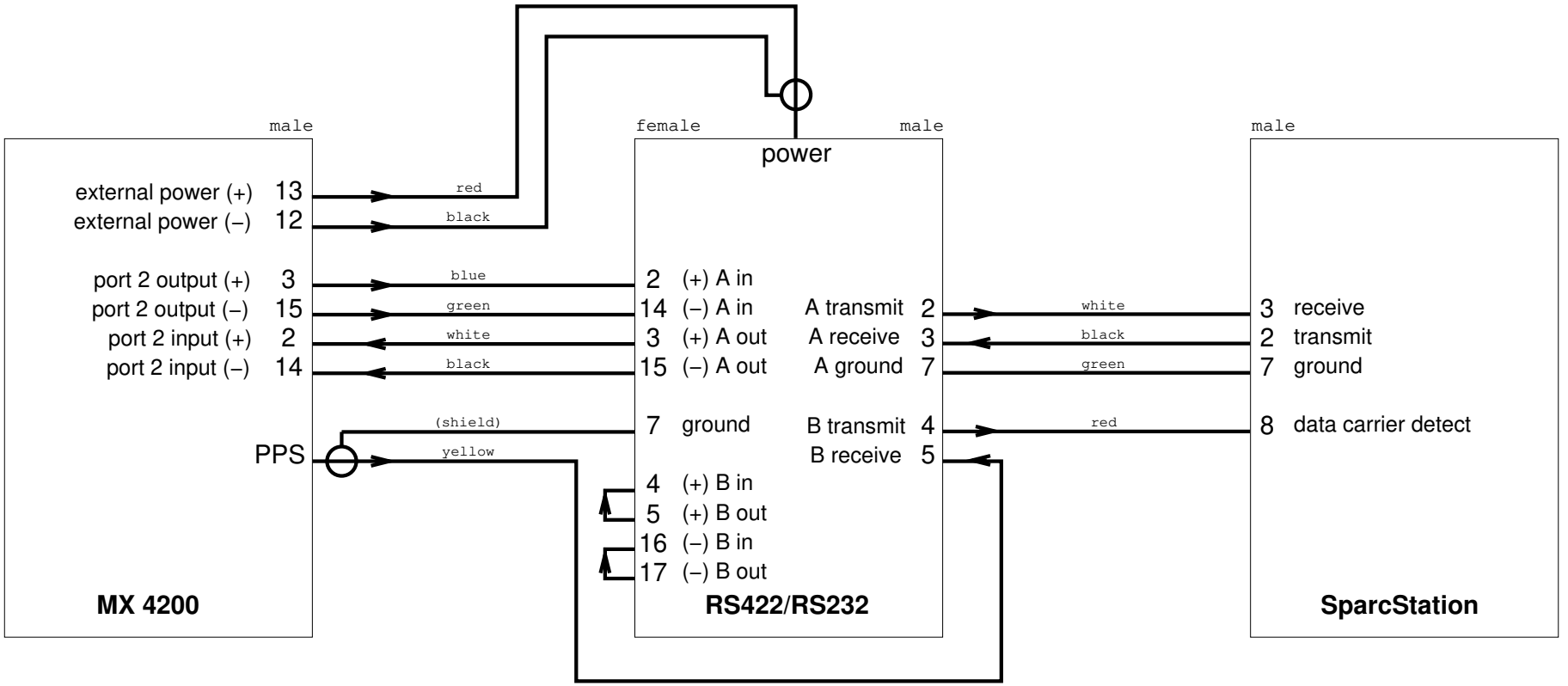

Notes:

The RS422/232 converter is a Magnavox 538534–3.
The PPS connector is a SMB female such as a Pomona 5378.
The power connector is a male 3/32 inch plug such as a Radio Shack 274–279
The data connectors are male and female DB–25s.

26–Mar–1993 (cal)