Context Diagram for Form-Routing System

Users

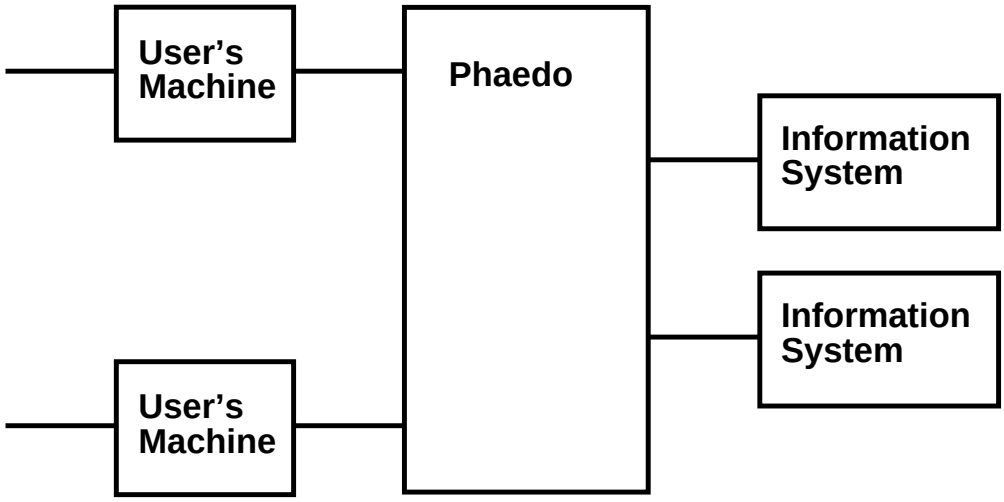

An external Information System is classified according to the tightness of its connection to Phaedo as follows:

Open System:
Provides data in response to Phaedo's queries; accepts data directly from Phaedo via well-defined interface.

Quasi-open System:
May provide data to Phaedo; accepts data into staging area for entry after review and acceptance.

Closed System:
Provides no data to Phaedo. Data is taken from Phaedo by manually transcribing the information into the system.