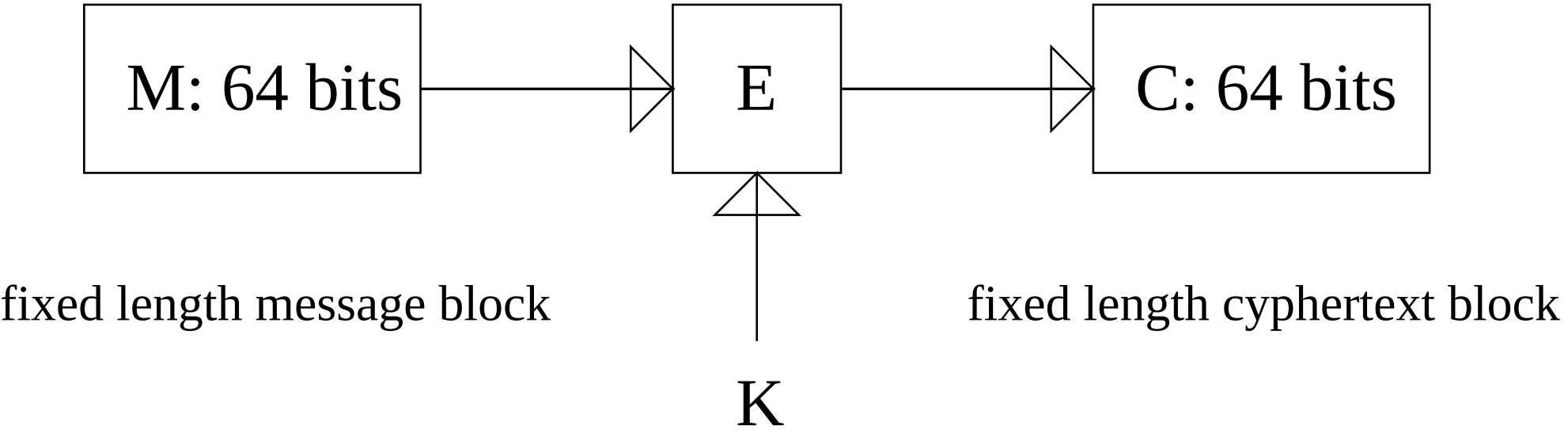
M: 64 bits
E
C: 64 bits
fixed length message block
fixed length cyphertext block
K