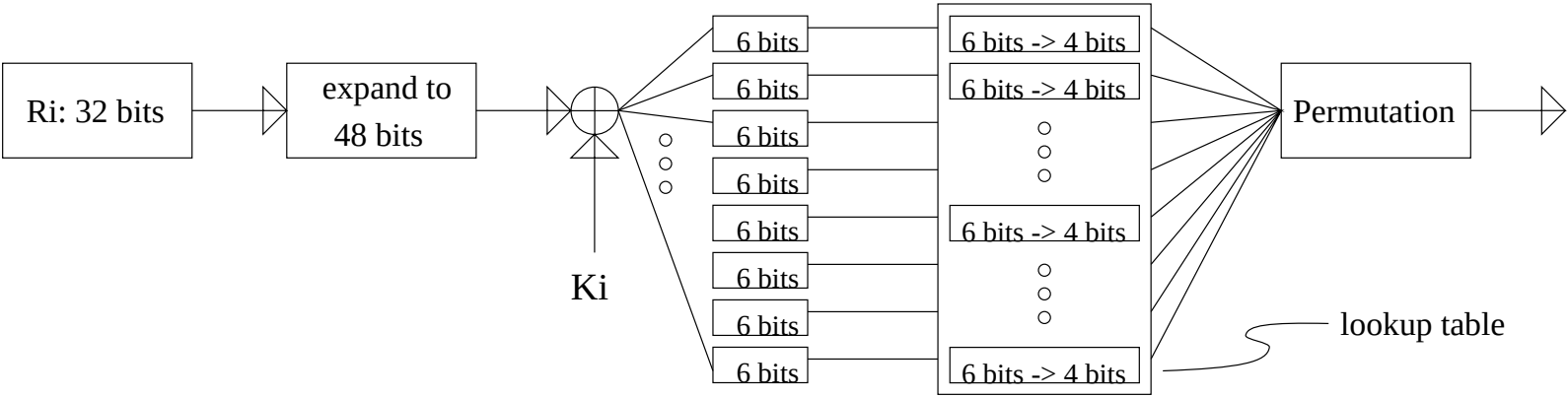
Ri: 32 bits
expand to 48 bits
Ki
6 bits
6 bits
6 bits
6 bits
6 bits
6 bits
6 bits
6 bits
6 bits -> 4 bits
6 bits -> 4 bits
6 bits -> 4 bits
6 bits -> 4 bits
Permutation
lookup table